SP619

High Current Power Switch

FEATURES

- Max $R_{DS(ON)}$ .377 Ohms
- Overcurrent deactivation 800mA
- Max leakage current less than 2µA while deactivated
- Small 6 pin SOT-23 package
- Built-in Over-temperature Protection
- 4.5V to 5.5V Input voltage range

APPLICATIONS

- Ultra low cost handsets
- PDA, DSC, MP3 players
- Cell phones
- Power Distribution Switch
- Battery-Charger Circuit

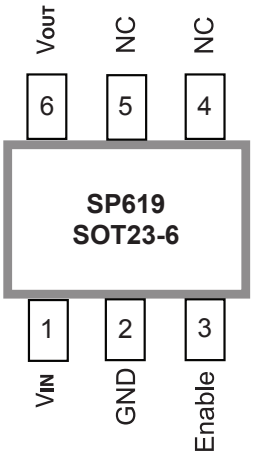

The product (or products) mentioned in this data sheet are no longer being manufactured and may not be ordered (OBS)

DESCRIPTION

The SP619 is a low $R_{DS(ON)}$ high current switch designed with precision current limiting to protect connected devices from damage due to a short circuit condition or against current surges that may cause the supply voltages to fall out of regulation. This switch is functional over an input voltage range of 2.5V to 7V, but is targeted at 5V applications. The SP619 is also protected from thermal overload which limits power dissipation. In shutdown mode, the supply current drops to 2µA.

TYPICAL APPLICATION CIRCUIT

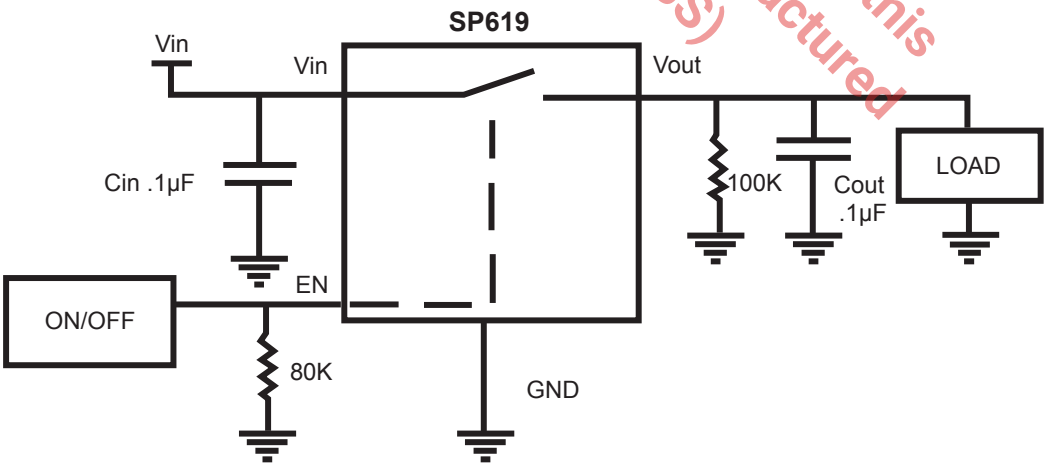

ABSOLUTE MAXIMUM RATINGS

These are stress ratings only and functional operation of the device at these ratings or any other above those indicated in the operation sections of the specifications below is not implied. Exposure to absolute maximum rating conditions for extended periods of time may affect reliability.

V_{IN}.....-0.3V to 7V
Storage Temperature..... -65°C to 150°C
Junction Temperature..... .....150°C
Lead Temperature (Soldering, 10 sec).....300°C
ESD RATING
Human Body Model.....2000V
Machine Model.....200V
OPERATING RATINGS
Thermal resistance SOT23-6
Junction to Ambient.....191°C
Junction to lead .....50°C

RECOMMENDED OPERATING CONDITIONS

Unless otherwise specified: V_{IN} = 4.5V - 5.5V, C_{IN} = 0.1µF, T_A = -10°C to + 85°C

PARAMETER	CONDITIONS	MIN	TYP (Note 1)	MAX	UNITS
Operating Input Voltage Range		4.5		5.5	V
Overcurrent Deactivation Range	EN=1.5V	620	800	1010	mA
Overcurrent Duration Before Deactivation	EN=1.5V	1		5.25	ms
Shutdown Supply Current	V_{IN}=4.5V			2	µA
Quiescent Supply Current	EN=1.5V V_{IN}=4.5V I_{OUT}=0mA			350	µA
Quiescent Supply Current	EN=1.5V V_{IN}=4.5V I_{OUT}=725mA			5.25	mA
$R_{DS(ON)}$	V_{IN}=4.5V I_{OUT}=100mA EN=1.5V			.377	Ω
Post Fault Output Load for Recovery	Enable=1.5V	10	15	23	KΩ
Post Fault Activation Turn On Time	Enable=1.5V	1		55	ms
Thermal Shutdown Die Temperature	SP619 will self recover when temperature drops below the trip point .	120	150	180	°C
Thermal Restart Die Temperature		90	120	135	°C
ENABLE Logic LOW	Driver is disabled			.5	V
ENABLE Pin Logic HIGH	Driver is active	.655		1.4	V
Turn On Delay	R_L=100kΩ, C_L= 0.01µF (Note 2,3)			600	µs
Turn Off Delay	R_L=100kΩ, C_L= 0.01µF (Note 2,4)			200	µs
Rise Time	R_L=100kΩ, C_L= 0.01µF (Note 2)			100	µs
Fall Time	R_L=100kΩ, C_L= 0.01µF (Note 2)			2500	µs

Note 1: Typicals are T_J=25°C
Note 2: Characterized, not 100% tested
Note 3: Turn on delay is measured from the time the enable pin is turned on to the time it takes the output to rise to 10% of its final value.
Note 4: Turn off delay is measured from the time the enable pin is turned to the time it takes for the output to fall to 90% of its current value.

The product (or products) mentioned in this data sheet are no longer being manufactured and may not be ordered (OBS)

FAULT AND RECOVERY TRUTH TABLE*

Enable	Load	Temperature (TJ)	Previous State	Switch	Current State/Fault (Note*)
Low	X	X	X	Open	Off
High	< 800 mA	< 163ºC	Off	Closed	Normal
High	< 800 mA	> 163ºC	Off	Open	Thermal Cutoff
High	> 800 mA	< 163ºC	Off	Open	Overcurrent
High	> 800 mA	> 163ºC	Off	Open	Thermal Cutoff, Overcurrent
High	< 15kΩ	< 163ºC	Overcurrent	Open	Load Condition
High	< 15kΩ	> 163ºC	Overcurrent	Open	Thermal Cutoff, Overcurrent, Load Condition
High	> 15kΩ	< 163ºC	Overcurrent	Closed	Normal
High	> 15kΩ	> 163ºC	Overcurrent	Open	Thermal Cutoff
High	< 15kΩ	< 120ºC	Thermal Cutoff	Open	Load Condition
High	< 15kΩ	> 120ºC	Thermal Cutoff	Open	Load Condition, Thermal Cutoff
High	> 15kΩ	< 120ºC	Thermal Cutoff	Closed	Normal
High	> 15kΩ	> 120ºC	Thermal Cutoff	Open	Thermal Cutoff

*Note: This table is for fault conditions, not for continuous operation, else damage to the device may occur. In order to recover to the normal state after a Thermal Cutoff fault, the part's junction temperature must decrease below 120ºC and the load on its output must be greater than 15kΩ.

The product (or products) mentioned in this data sheet are no longer being manufactured and may not be ordered (OBS)

PIN ASSIGNMENTS

PIN NUMBER	PIN NAME	FUNCTION
1	VIN	Input power supply pin (4.5V to 5.5V)
2	GND	Ground connection
3	Enable	A logic high turns on the switch
4	NC	No connect
5	NC	No connect
6	VOUT	Switch output

The SP619 is a switch capable of handling up to 800mA of current.

The SP619 is targeted as a 5V USB protection power distribution switch. And can be used in general power distribution applications where short circuits are likely to be encountered.

Short circuit operation

When the SP619 enters a short circuit condition, the switch is disabled. The output of the SP619 will not restart until the output impedance is greater than 15KΩ. The enable pin can be used to re-enable the SP619 into any load condition that is not a fault condition. Refer to the truth table on page 4 for more information on the different SP619 switch states. The typical deactivation time is about 2ms.

Enable

The enable pin allows easy control of the SP619. The enable pin should not be enabled high prior to a voltage being present on the input of the device. The enable pin should not exceed the input voltage by more than 0.1V due to an internal ESD diode. Doing so will affect the operation of the SP619 and could damage the device. In a typical application an 80KΩ resistor to GND should be used on the enable pin. This resistor will pull the enable low when an enable signal is not present. This prevents the SP619 from falsely turning on. The enable pin can also be used to restart the part into a load condition that is high in current. Please refer to the truth table on page 4 for more details.

Inrush Current

The SP619 is a simple resistive switch. When the switch is turned on into a highly capacitive load there could be a significant inrush current that can be encountered. At 6 volts in, the inrush current was about 250mA into a 100µF capacitor.

Output Voltage Rise Time

The output voltage of the SP619 has an output capacitance dependency on the slope of V_{OUT}. A simple RC circuit is created when the switch is turned on.

Equation 1

$$V(t)=V_O+V_{IN}\left(1-e^{\frac{-t}{R_{DS(ON)} \cdot C_{OUT}}}\right)$$

Where V_O is initial Voltage condition typically 0V

V_{IN} is the input voltage

$R_{DS(ON)}$ is the switch resistance

C_{OUT} is the output capacitance

For 4.2V V_{IN} and 100µF output capacitance we get about 150ns delay in figure 2.



This is comparable to actual measured value in figure 3.

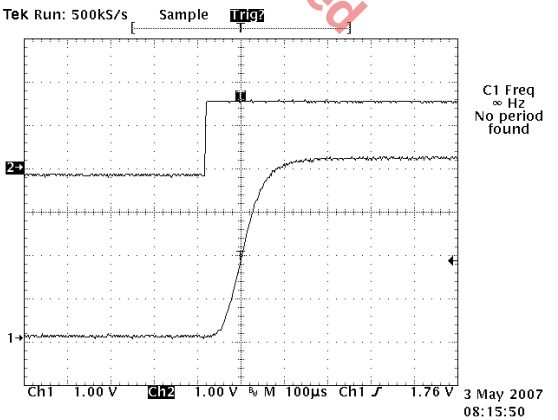

The Product (or products) mentioned in this data sheet are no longer being manufactured and may not be ordered (OBS).

Overtemperature Protection

The SP619 has built-in overtemperature protection to protect the part against damage if the die temperature gets too hot. The typical thermal cutoff is about 150ºC. The part will self recover if the temperature drops below the thermal restart threshold of about 120ºC.

Layout Considerations

The input and output decoupling capacitors should be placed as close as possible to the input and output pins. The GND pin should be stitched to the GND plain to help with thermal performance. The input and output traces should be as large as possible. The 100KΩ is also recommended in the design and should be placed close to the output decoupling cap.

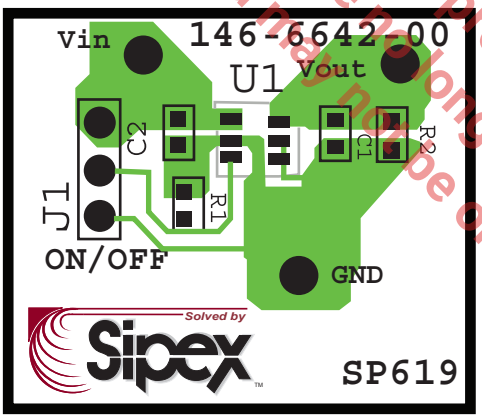

Recommended Layout

The product (or products) mentioned in this data sheet are no longer being manufactured and may not be ordered (OBS)

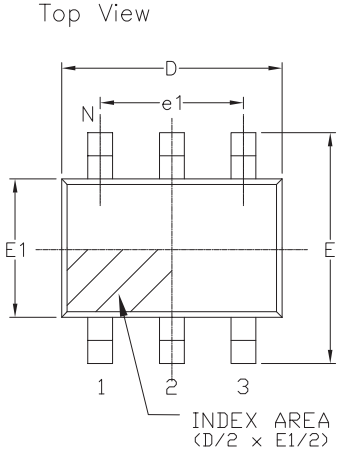

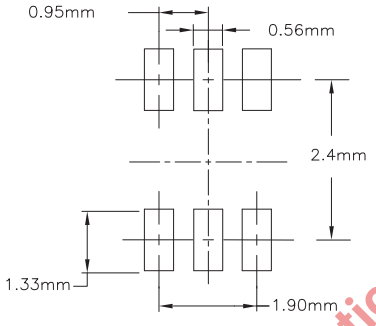

LAND PATTERN RECOMMENDATION

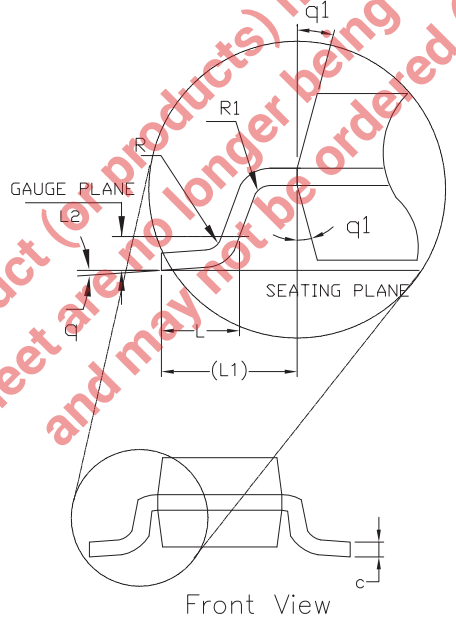

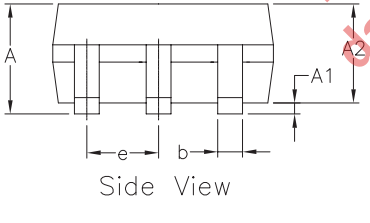

6 Pin SOT-23 JEDEC MO-178 Variation AB						
SYMBOLS	DIMENSIONS IN MM (Control Unit)			DIMENSIONS IN INCH (Reference Unit)		
	MIN	NOM	MAX	MIN	NOM	MAX
A	—	—	1.45	—	—	0.057
A1	0.00	—	0.15	0.000	—	0.006
A2	0.90	1.15	1.30	0.036	0.045	0.051
b	0.30	—	0.50	0.012	—	0.020
c	0.08	—	0.22	0.003	—	0.009
D	2.90 BSC			0.115 BSC		
E	2.80 BSC			0.111 BSC		
E1	1.60 BSC			0.063 BSC		
e	0.95 BSC			0.038 BSC		
e1	1.90 BSC			0.075 BSC		
L	0.30	0.45	0.60	0.012	0.018	0.024
L1	0.60 REF			0.024 REF		
L2	0.25 BSC			0.010 BSC		
R	0.10	—	—	0.004	—	—
R1	0.10	—	0.25	0.004	—	0.010
q	0°	4°	8°	0°	4°	8°
q1	5°	10°	15°	5°	10°	15°
N	6			6		

The product (or products) mentioned in this data sheet are no longer being manufactured and may not be ordered (OBS)

Drawing No: POD-00000032
Revision: A

ORDERING INFORMATION[1]

Part number	Operating Temperature Range	Lead-Free	Package Type	Packaging Method
SP619EK-L/TR[3]	-10 to +85ºC	Yes[2]	6 pin SOT23	Tape and Reel
SP619EK-L/TRR3	-10 to +85ºC			Tape and Reel (reverse orientation)

NOTE:
1. Refer to www.exar.com/SP619 for most up-to-date Ordering Information
2. Visit www.exar.com for additional information on Environmental Rating.
3. NRND - Not recommended for new designs.

The product (or products) mentioned in this data sheet are no longer being manufactured and may not be ordered (OBS)

MAXLINEAR

Corporate Headquarters:
5966 La Place Court
Suite 100
Carlsbad, CA 92008
Tel.:+1 (760) 692-0711
Fax: +1 (760) 444-8598
www.maxlinear.com

High Performance Analog:
48720 Kato Road
Fremont, CA 94538
Tel.: +1 (510) 668-7000
Fax: +1 (510) 668-7001
Email: powertechsupport@exar.com
www.exar.com

The content of this document is furnished for informational use only, is subject to change without notice, and should not be construed as a commitment by MaxLinear, Inc.. MaxLinear, Inc. assumes no responsibility or liability for any errors or inaccuracies that may appear in the informational content contained in this guide. Complying with all applicable copyright laws is the responsibility of the user. Without limiting the rights under copyright, no part of this document may be reproduced into, stored in, or introduced into a retrieval system, or transmitted in any form or by any means (electronic, mechanical, photocopying, recording, or otherwise), or for any purpose, without the express written permission of MaxLinear, Inc.

Maxlinear, Inc. does not recommend the use of any of its products in life support applications where the failure or malfunction of the product can reasonably be expected to cause failure of the life support system or to significantly affect its safety or effectiveness. Products are not authorized for use in such applications unless MaxLinear, Inc. receives, in writing, assurances to its satisfaction that: (a) the risk of injury or damage has been minimized; (b) the user assumes all such risks; (c) potential liability of MaxLinear, Inc. is adequately protected under the circumstances.

MaxLinear, Inc. may have patents, patent applications, trademarks, copyrights, or other intellectual property rights covering subject matter in this document. Except as expressly provided in any written license agreement from MaxLinear, Inc., the furnishing of this document does not give you any license to these patents, trademarks, copyrights, or other intellectual property.

Company and product names may be registered trademarks or trademarks of the respective owners with which they are associated.

© 2008 - 2017 MaxLinear, Inc. All rights reserved