SP7662

Powerblox™

12A 300KHz Synchronous Step Down Regulator

September 2012 Rev. 2.1.0

GENERAL DESCRIPTION

The SP7662 is a synchronous voltage mode PWM step down (buck) regulator capable of a constant output current up to 12 Amps. A wide 5V to 22V single input voltage range allows for single supply operations from industry standard 5V, 12V and 18V power rails. Operations down to 3V are supported with an additional biasing voltage.

With a 300kHz constant operating frequency and integrated high and low side switch, the SP7662 reduces the overall component count and solution footprint. In addition to a 1% output setpoint accuracy, this device provides high efficiency, low ripple and excellent line and load regulation. An enable function and soft start feature allow for controlled power up sequencing implementation.

Built-in current limiting, UVLO, output short-circuit and over temperature protection insure safe operation under abnormal operating conditions.

The SP7662 is offered in a RoHS compliant, lead free 26-pin 7mmx4mm DFN package.

APPLICATIONS

- **Distributed Power Architectures**
- **Point of Load Converters**
- **Power Supply Modules**
- **FPGAs, DSPs and Processors Supplies**

FEATURES

- **12A Continuous Current**
- **5V-22V Single Input Voltage Rail**
  - 3V-22V Input Voltage with 5V Bias
- **PWM Voltage Mode Control**
  - 300kHz Fixed Synchronous Operations
  - Low RDSON Power Switches
  - 0.8V Min. Output Voltage – 1% Accuracy
- **Type II & III Compensations Support**
- **Programmable Soft Start**
- **Over Temperature & Short Circuit Protection/Auto-Restart**
- **Current Limiting**
- **RoHS Compliant Lead Free 26-Pin DFN**
- **US Patent #6,922,041**

The device (or product) mentioned in this data sheet are no longer being manufactured and may not be ordered (OBS)

TYPICAL APPLICATION DIAGRAM

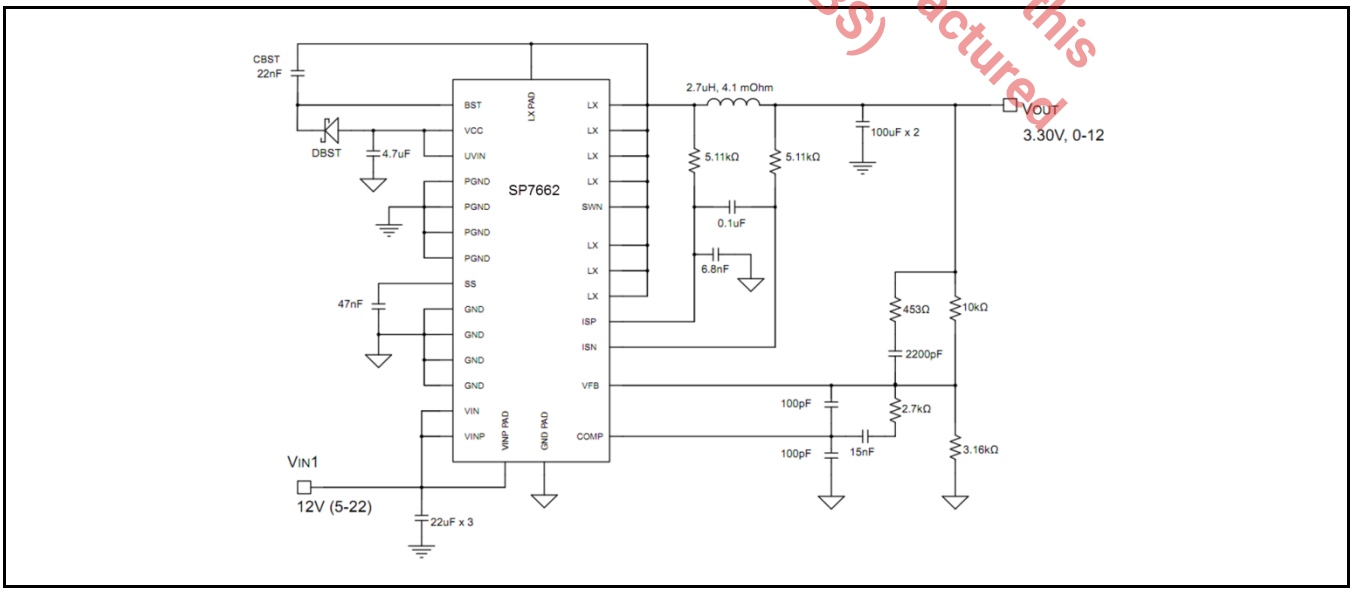

Fig. 1: SP7662 Application Diagram

ABSOLUTE MAXIMUM RATINGS

These are stress ratings only and functional operation of the device at these ratings or any other above those indicated in the operation sections of the specifications below is not implied. Exposure to absolute maximum rating conditions for extended periods of time may affect reliability.

V_{CC} 7.0V
V_{IN} 25V
BST 30V
LX-BST ..... -0.3V to 7.0V
LX ..... -1V to 30V
All other pins ..... -0.3V to (V_{CC}+0.3)V
Storage Temperature ..... -65°C to 150°C
Power Dissipation ..... Internally Limited via OTP
Lead Temperature (Soldering, 10 sec) ..... 300°C
ESD Rating (HBM - Human Body Model) .....
LX, VINP, PGND 400V
All other pins 2kV

OPERATING RATINGS

Input Voltage Range V_{CC} ..... 4.5V to 5.5V
Input Voltage Range V_{IN} ..... 3V to 22V
Junction Temperature Range ..... -40°C to 125°C
Thermal Resistance θ_{JC} ..... 5°C/W
Thermal Resistance θ_{JA} ..... 36°C/W

The product (or products) mentioned in this data sheet are no longer being manufactured and may not be ordered (OBS)

ELECTRICAL SPECIFICATIONS

Specifications with standard type are for an Operating Junction Temperature of T_J = 25°C only; limits applying over the full Operating Junction Temperature range are denoted by a "•". Minimum and Maximum limits are guaranteed through test, design, or statistical correlation. Typical values represent the most likely parametric norm at T_J = 25°C, and are provided for reference purposes only. Unless otherwise indicated, 4.5V < V_{CC} < 5.5V, 3V < V_{IN} < 22V, BST = LX + 5V, UVIN = 3V, C_{VCC} = 1µF, C_{COMP} = 0.1µF, C_{SS} = 50nF.

Parameter	Min.	Typ.	Max.	Units		Conditions
Quiescent Current						
V_{IN} Supply Current (No switching)		1.5	3.0	mA	•	V_{FB}= 0.9V
V_{IN} Supply Current (Switching)		8	20	mA		
BST Supply Current (No switching)		0.2	0.4	mA	•	V_{FB}= 0.9V
BST Supply Current (switching)		3	6	mA		
Protection: UVLO						
V_{CC} UVLO Start Threshold	4.00	4.25	4.5	V	•	
V_{CC} UVLO Hysteresis	100	200	300	mV	•	
UV_{IN} Start Threshold	2.30	2.50	2.65	V	•	
UV_{IN} Hysteresis	200	300	400	mV	•	
UV_{IN} Input Current			1.0	µA	•	UV_{IN}=3.0V
Error Amplifier Reference						
Error Amplifier Reference	0.792	0.800	0.808	V		2X Gain Config., Measure V_{FB}; V_{CC}=5V
Error Amplifier Reference Over Line	0.784	0.800	0.816	V	•	
COMP Sink Current	70	150	230	µA	•	V_{FB}=0.9V, COMP=0.9V
COMP Source Current	-230	-150	-70	µA	•	V_{FB}=0.9V, COMP=0.9V
V_{FB} Input Bias Current		50	200	nA	•	V_{FB}=0.8V
COMP Clamp	3.2	3.5	3.8	V		V_{FB}=0.7V, T_A=25°C
COMP Clamp Temp. Coefficient		-2.0		mV/°C		

Parameter	Min.	Typ.	Max.	Units		Conditions
VCC Linear Regulator						
VCC output Voltage	4.7	5.0	5.3	V	•	V_{IN}=6 to 22V, I_{LOAD}=0mA to 30mA
	4.51	4.73			•	V_{IN}=5V, I_{LOAD}=20mA
Dropout Voltage	250	500	750	mV	•	V_{IN}-V_{OUT}=Dropout voltage when V_{CC} regulated drops by 2%, IV_{CC}=30mA
Control Loop						
Ramp Amplitude	0.80	1.00	1.20	V	•	
RAMP Offset	1.7	2.0	2.3	V	•	
Ramp offset Temperature Coefficient		-2		mV/°C		
GH Minimum Pulse Width		50	180		•	
Maximum Controllable Duty Ratio	92	97		%	•	
Maximum Duty Ratio	100			%	•	Valid for 20 cycles
Oscillator Frequency	255	300	345	KHz	•	
Soft-start, Short Circuit, Current Limit and Thermal Protection						
SS Charge Current	-16	-10	-4	µA	•	
SS Discharge Current	1.0	2.0	3.0	mA	•	Fault Present, SS=0.2V
Short Circuit Threshold Voltage	0.2	0.25	0.3	V	•	
Hiccup Timeout	170	220	270	ms	•	V_{FB}=0.5V
Overcurrent Threshold Voltage	54	60	66	mV		Measured ISP - ISN
ISP, ISN Common Mode Range	0		3.6	V		
Thermal Shutdown Temperature	135	145	155	°C		Guaranteed by design
Thermal Hysteresis		10		°C		Thermal recovery on decreasing temperature
Output Power Stage						
High Side Switch RDSON		21	25	mΩ		V_{GS}=4.5V, I_{DRAIN}=5A, T_A=25°C
Synchronous Low Side Switch R_{DSON}		9	15	mΩ		V_{GS}=4.5V, I_{DRAIN}=5A, T_A=25°C
Maximum Output Current	12			A	•	

The product(or Products) mentioned in this data sheet are no longer being manufactured and may not be ordered (OBS)

BLOCK DIAGRAM

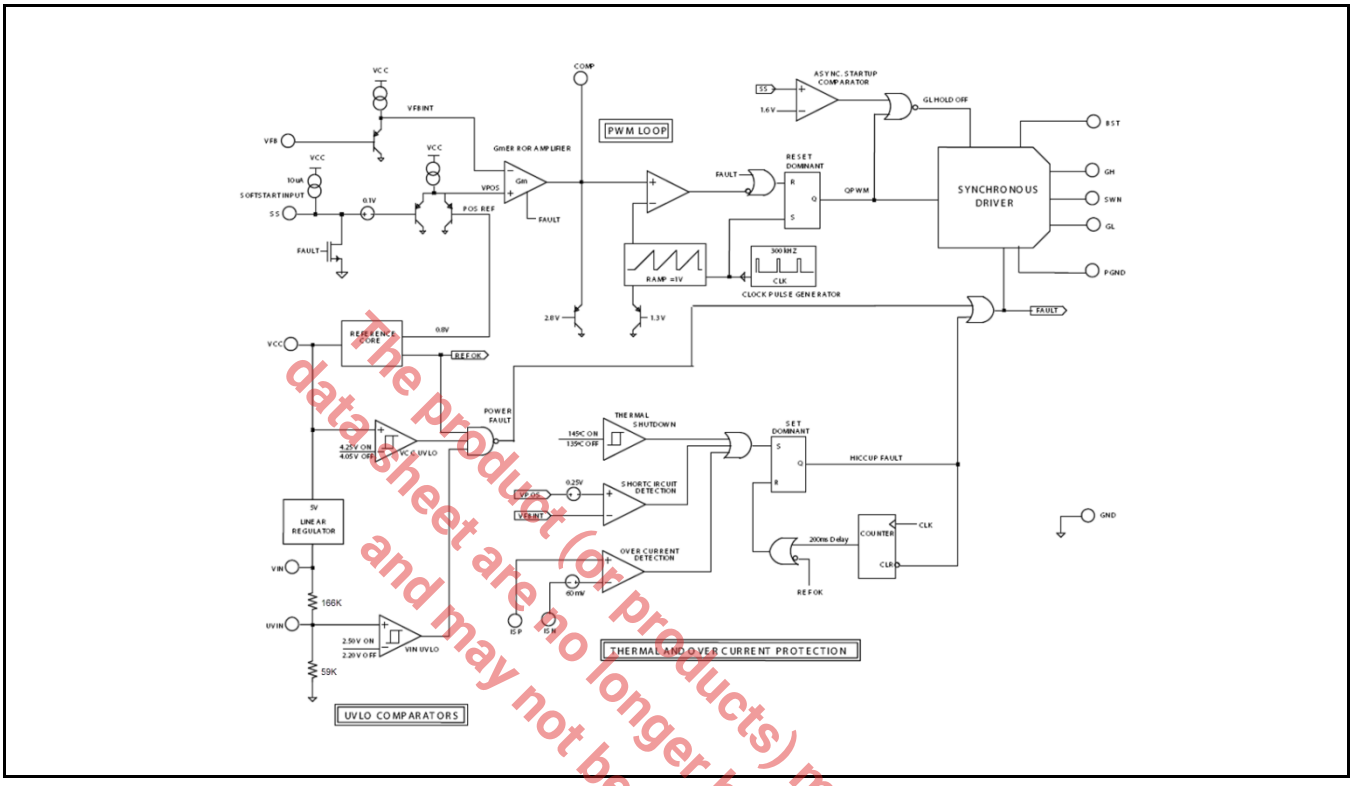

The product (or products) mentioned in this datasheet are no longer being manufactured and may not be ordered (OBS)

Fig. 2: SP7662 Block Diagram (Exar's SP6133 controller based)

PIN ASSIGNMENT

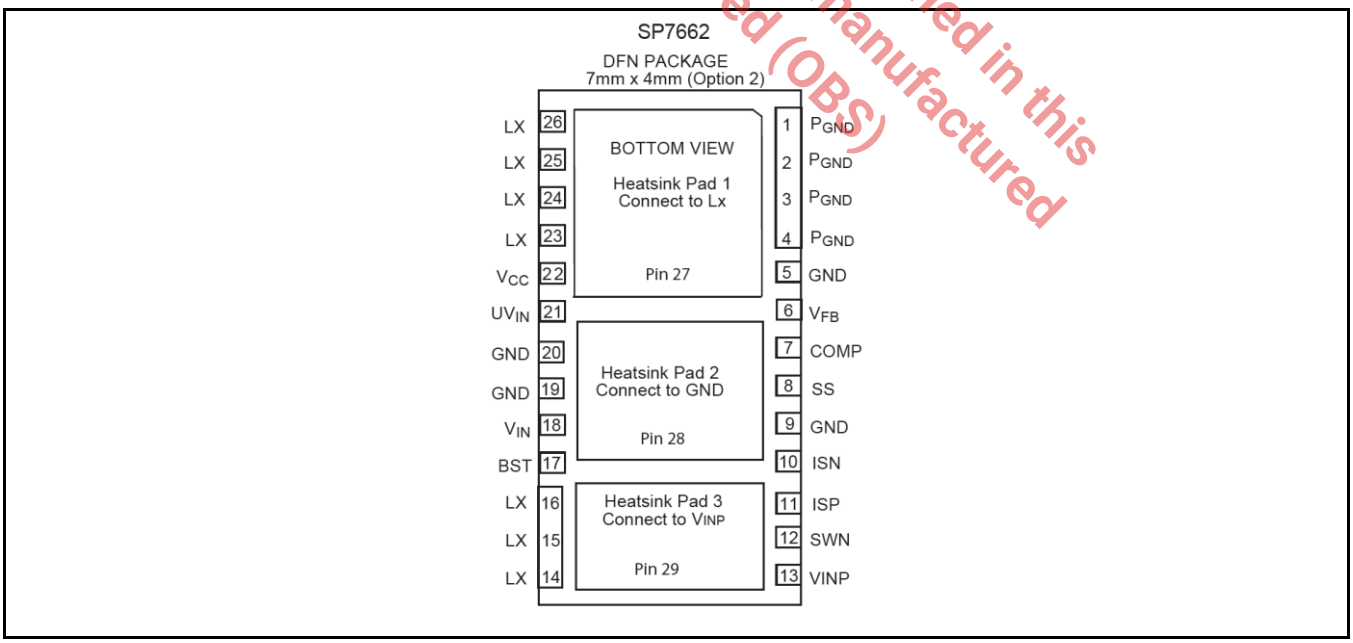

Fig. 3: SP7662 Pin Assignment

PIN DESCRIPTION

Name	Pin Number	Description
PGND	1-4	Ground connection for the synchronous rectifier.
GND	5,9,19,20,28	Ground Pin. The control circuitry of the IC and lower power driver are referenced to this pin. Return separately from other ground traces to the (-) terminal of C_{OUT}.
VFB	6	Feedback Voltage and Short Circuit Detection pin. It is the inverting input of the Error Amplifier and serves as the output voltage feedback point for the Buck Converter. The output voltage is sensed and can be adjusted through an external resistor divider. Whenever V_{FB} drops 0.25V below the positive reference, a short circuit fault is detected and the IC enters hiccup mode.
COMP	7	Output of the Error Amplifier. It is internally connected to the inverting input of the PWM comparator. An optimal filter combination is chosen and connected to this pin and either ground or V_{FB} to stabilize the voltage mode loop.
SS	8	Soft Start. Connect an external capacitor between SS and GND to set the soft start rate based on the 10µA source current. The SS pin is held low via a 1mA (min) current during all fault conditions.
ISN	10	Current sense negative input. Rail-to-rail input for over current detection.
ISP	11	Current sense positive input. Rail-to-rail input for over current detection.
SWN	12	Lower supply rail for the GH high-side gate driver. Connect this pin to the switching node as close as possible to pins 23- 27. Do not connect this pin to pins 14 – 16.
VINP	13, 29	Input connection to the high side N-channel MOSFET.
LX	14-16, 23-27	Connect an inductor between this pin and V_{OUT}.
BST	17	High side driver supply pin. Connect BST to the external boost diode and capacitor as shown in the Typical Application Circuit on page 1. The high side driver is connected between BST pin and SWN pin.
VIN	18	V_{IN} connection for internal LDO and PWM Controller.
UVIN	21	UVLO input for V_{IN} voltage. Connect a resistor divider between V_{IN} and UVIN to set minimum operating voltage. Use resistor values below 20kΩ to override internal resistor divider.
VCC	22	Output of internal regulator. May be externally biased if V_{IN} < 5V.

The product (or products) mentioned in this data sheet are no longer being manufactured and may not be ordered (OBS)

ORDERING INFORMATION

Part Number	Junction Temperature Range	Marking	Package	Packing Quantity	Note 1	Note 2
SP7662ER-L	-40°C≤T_J≤+125°C	SP7662ER YYWWL X	26-pin DFN	Bulk	Lead Free	
SP7662ER-L/TR	-40°C≤T_J≤+125°C	SP7662ER YYWWL X	26-pin DFN	3K/Tape & Reel	Lead Free	
SP7662EB	SP7662 Evaluation Board					

"YY" = Year – "WW" = Work Week – "X" = Lot Number

TYPICAL PERFORMANCE CHARACTERISTICS

All data taken at T_J = 25°C, unless otherwise specified - Schematic and BOM from Application Information section of this datasheet.

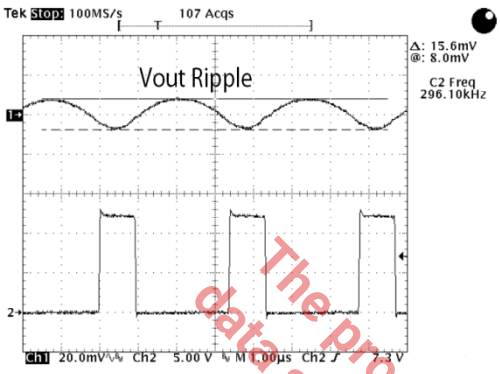

Fig. 4: Output Ripple, No Load

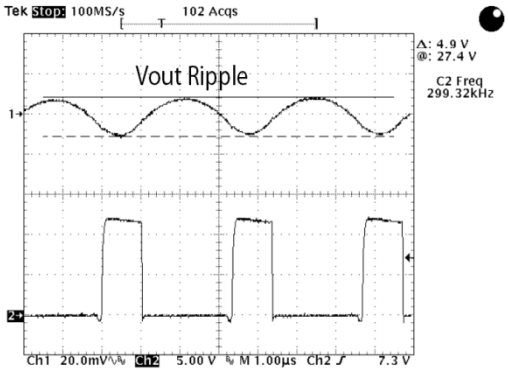

Fig. 5: Output Ripple, I_{OUT}=12A

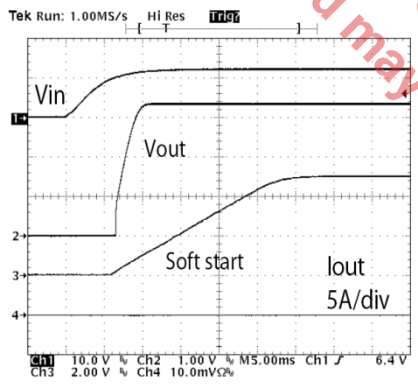

Fig. 6: Startup Response, No Load

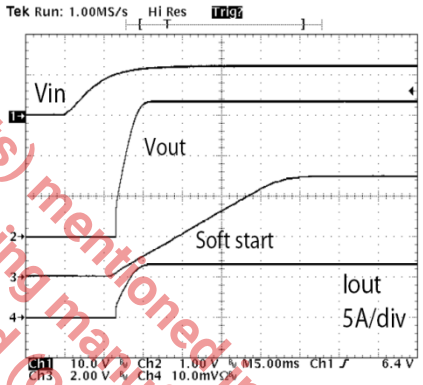

Fig. 7: Startup Response, I_{OUT}=6A

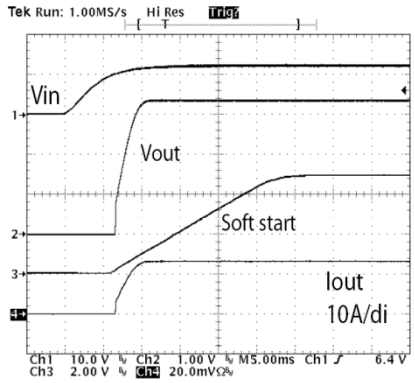

Fig. 8: Startup Response, I_{OUT}=12A

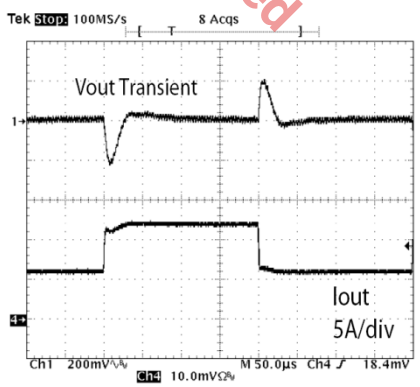

Fig. 9: Load Step Response, I_{OUT}=6A-12A

The product (or products) mentioned in this data sheet are no longer being manufactured and may not be ordered (OBS)

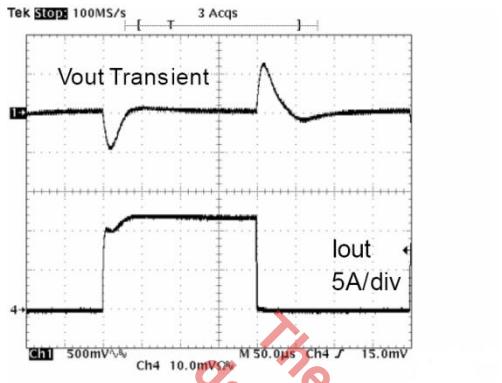

Fig. 10: Load Step Response, I_{OUT}=0A-12A

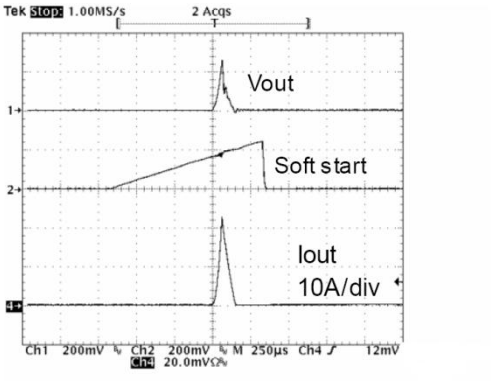

Fig. 11: Output Short Circuit

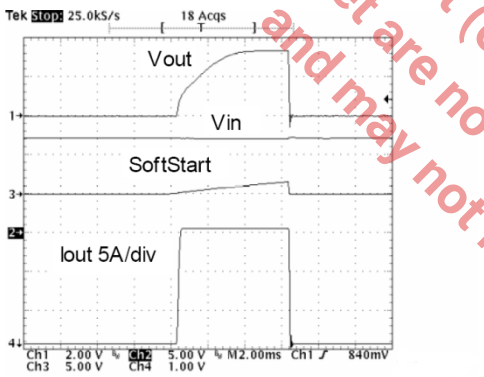

Fig. 12: OCP Hiccup Response

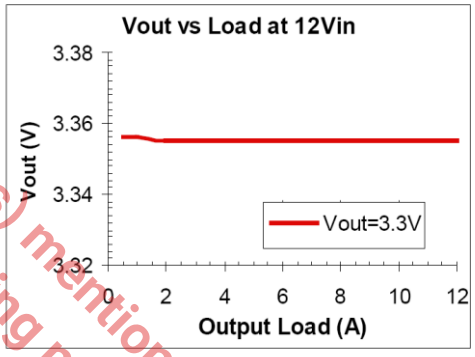

Fig. 13: V_{OUT} versus Load Current, V_{IN}=12V

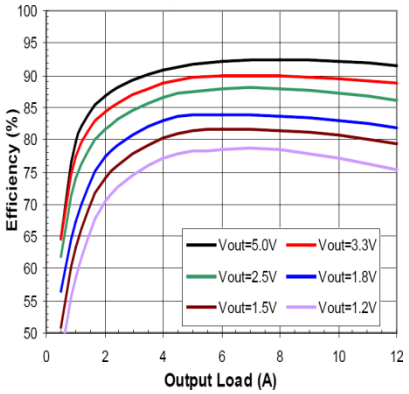

Fig. 14: Efficiency versus I_{OUT}, V_{IN}=22V

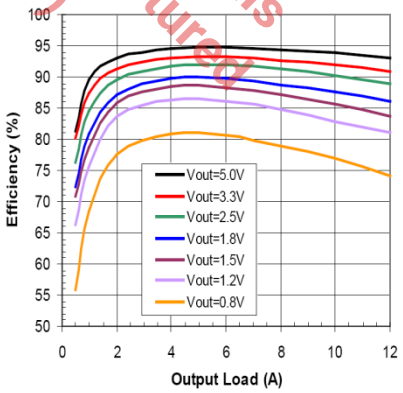

Fig. 15: Efficiency versus I_{OUT}, V_{IN}=12V

The product (or products) mentioned in this data sheet are no longer being manufactured and may not be ordered (OBS).

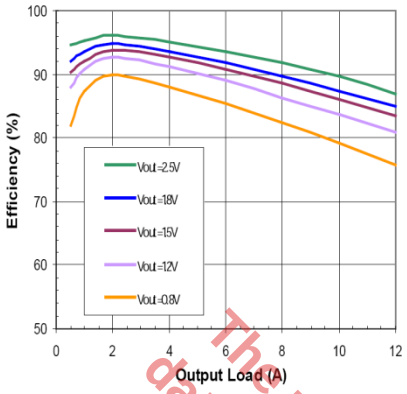

Fig. 16: Efficiency versus I_{OUT}, V_{IN}=3.3V

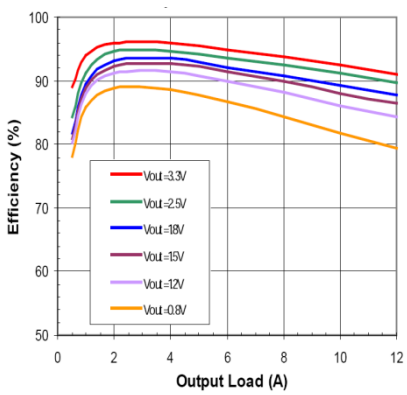

Fig. 17: Efficiency versus I_{OUT}, V_{IN}=5V

The Product (or products) mentioned in this data sheet are no longer being manufactured and may not be ordered (OBS)

THEORY OF OPERATION

GENERAL OVERVIEW

The SP7662 is a fixed frequency, voltage mode, synchronous PWM regulator optimized for high efficiency. The part has been specifically designed for single supply operation from a 5V to 22V input.

The heart of the SP7662 is a wide bandwidth transconductance amplifier designed to accommodate Type II and Type III compensation schemes. A precision 0.8V reference, present on the positive terminal of the error amplifier, permits the programming of the output voltage down to 0.8V via the VFB pin. The output of the error amplifier, COMP, is compared to a 1.1V peak-to-peak ramp, which is responsible for trailing edge PWM control. This voltage ramp and PWM control logic are governed by the internal oscillator that accurately sets the PWM frequency to 300kHz.

The SP7662 contains two unique control features that are very powerful in distributed applications. First, non-synchronous driver control is enabled during startup, to prohibit the low side switch from pulling down the output until the high side switch has attempted to turn on. Second, a 100% duty cycle timeout ensures that the low side switch is periodically enhanced during extended periods at 100% duty cycle. This guarantees the synchronized refreshing of the BST capacitor during very large duty ratios.

The SP7662 also contains a number of valuable protection features. Programmable V_{IN} UVLO allows the user to set the exact value at which the conversion voltage can safely begin down-conversion, and an internal VCC UVLO which ensures that the controller itself has enough voltage to properly operate. Other protection features include thermal shutdown and short-circuit detection. In the event that either a thermal, short-circuit, or UVLO fault is detected, the SP7662 is forced into an idle state where the output drivers are held off for a finite period before a restart is attempted.

SOFT START

"Soft Start" is achieved when a power converter ramps up the output voltage while controlling the magnitude of the input supply source current. In a modern step down converter, ramping up the positive terminal of the error amplifier controls soft start. As a result, excess source current can be defined as the current required to charge the output capacitor.

$$I_{VIN} = C_{OUT} \times \left(\frac{\Delta V_{OUT}}{\Delta T_{SOFT-START}}\right)$$

The SP7662 provides the user with the option to program the soft start rate by tying a capacitor from the SS pin to GND. The selection of this capacitor is based on the 10µA pull up current present at the SS pin and the 0.8V reference voltage. Therefore, the excess source can be redefined as:

$$I_{VIN} = C_{OUT} \times \left(\frac{\Delta V_{OUT} \times 10\mu A}{C_{SS} \times 0.8V}\right)$$

UNDER VOLTAGE LOCK OUT (UVLO)

The SP7662 has two separate UVLO comparators to monitor the bias (Vcc) and Input (V_{IN}) voltages independently. The Vcc UVLO is internally set to 4.25V. The Vin UVLO is programmable through UVIN pin. When UVIN pin is greater than 2.5V the SP7662 is permitted to start up pending the removal of all other faults. A pair of internal resistors is connected to UVIN as shown in Figure 15.

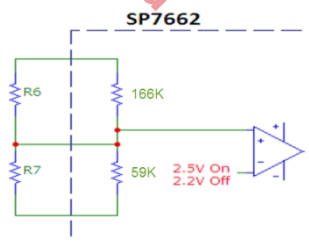

Fig. 18: Internal and External Bias of UVIN

Therefore without external biasing the V_{IN} start threshold is 9.5V. A small capacitor may be required between UVIN and GND to filter out noise. For applications with V_{IN} of 5V or 3.3V, connect UVIN directly to V_{IN}. To program the V_{IN} start threshold, use a pair of external

The product (or product(s) mentioned in this data sheet are no longer being manufactured and may not be ordered (OBS).

resistors as shown. If external resistors are an order of magnitude smaller than internal resistors, then the V_{IN} start threshold is given by:

$$V_{IN}(Start) = 2.5 \times \left(\frac{R_6 + R_7}{R_7}\right)$$

For example, if it is required to have a V_{IN} start threshold of 7V, then let R_7 = 5kΩ and using the V_{IN} start threshold equation we get R_6 = 9.09kΩ.

THERMAL AND SHORT-CIRCUIT PROTECTION

Because the SP7662 is designed to drive large output current, there is a chance that the power converter will become too hot. Therefore, an internal thermal shutdown (145°C) has been included to prevent the IC from malfunctioning at extreme temperatures.

A short-circuit detection comparator has also been included in the SP7662 to protect against an accidental short at the output of the power converter. This comparator constantly monitors the positive and negative terminals of the error amplifier, and if the VFB pin falls more than 250mV (typical) below the positive reference, a short-circuit fault is set. Because the SS pin overrides the internal 0.8V reference during soft start, the SP7662 is capable of detecting short-circuit faults throughout the duration of soft start as well as in regular operation.

OVER-CURRENT PROTECTION

The Over-current protection feature can only be used on output voltages ≤ 3.3 volts. It is limited by the common mode rating of the op-amp used to sense the voltage across the inductor. Over-current is detected by monitoring a differential voltage across the output inductor as shown in the Figure 16.

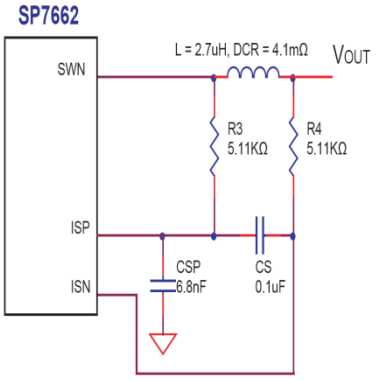

Fig. 19: Over Current Detection Circuit

Inputs to an over-current detection comparator, set to trigger at 60mV nominal, are connected to the inductor as shown. Since the average voltage sensed by the comparator is equal to the product of inductor current and inductor DC resistance (DCR), then:

$$I_{MAX} = \frac{60mV}{DCR}$$

Solving this equation for the specific inductor in circuit 1, I_{MAX}=14.6A. When I_{MAX} is reached, a 220ms time-out is initiated, during which top and bottom drivers are turned off. Following the time-out, a restart is attempted. If the fault condition persists, then the time-out is repeated (referred to as hiccup).

Increasing the Current Limit

If it is desired to set I_{MAX} > (60mV/DCR) (in this case larger than 14.6A), then a resistor R_9 should be added as shown in Figure 18. R_9 forms a resistor divider and reduces the voltage seen by the comparator.

Since

$$\frac{60mV}{R_9} = \frac{I_{MAX} \times DCR}{R_3 + R_4 + R_9}$$

Solving for R_9 we get:

$$R_9 = \frac{60mV \times (R_3 + R_4)}{(I_{MAX} \times DCR) - 60mV}$$

As an example: if desired I_{MAX} is 17A, then R_9 = 63.4kΩ.

The product(s) mentioned in this data sheet are no longer being manufactured and may not be ordered (OBS)

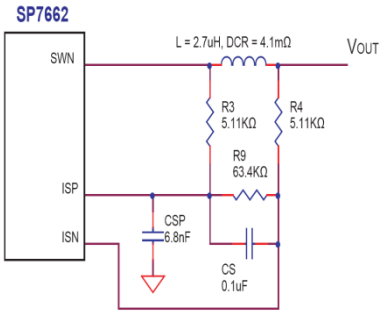

Fig. 20: Over Current Detection Circuit for I_{MAX}>60mV/DCR

Decreasing the Current Limit

If it is required to set I_{MAX}<(60mV/DCR), a resistor can be added as shown in Figure 18. R_8 increases the net voltage detected by the current-sense comparator. Voltage at the positive and negative terminal of comparator is given by:

$$VSP = V_{OUT} + (I_{MAX} \times DCR)$$

$$VSN = V_{OUT} \times \left(\frac{R_8}{R_4 + R_8}\right)$$

Since the comparator is triggered at 60mV:

$$VSP - VSN = 60mV$$

Combining the above equations and solving for R_8:

$$R_8 = R_4 \times \frac{V_{OUT} - 60mV + (I_{MAX} \times DCR)}{60mV - (I_{MAX} \times DCR)}$$

As an example: for I_{MAX} of 12A and V_{OUT} of 3.3V, calculated R_8 is 1.5MΩ.

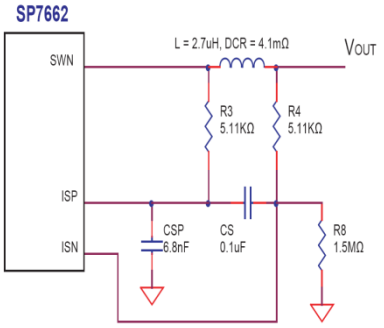

Fig. 21: Over Current Detection Circuit for I_{MAX}<(60mV/DCR)

HANDLING OF FAULTS

Upon the detection of power (UVLO), thermal, or short-circuit faults, the SP7662 is forced into an idle state where the SS and COMP pins are pulled low and both switches are held off. In the event of UVLO fault, the SP7662 remains in this idle state until the UVLO fault is removed. Upon the detection of a thermal or short-circuit fault, an internal 200ms timer is activated. In the event of a short-circuit fault, a restart is attempted immediately after the 120ms timeout expires. Whereas, when a thermal fault is detected the 200ms delay continuously recycles and a restart cannot be attempted until the thermal fault is removed and the timer expires.

ERROR AMPLIFIER AND VOLTAGE LOOP

The heart of the SP7662 control loop is a high performance, wide bandwidth transconductance amplifier. Because of the amplifier's current limited (±150µA) transconductance, there are many ways to compensate the voltage loop or to control the COMP pin externally. A simple, single pole, single zero compensation can be a RC to ground. However Exar recommends a Type II or Type III compensation which eliminates the gm of the amplifier from the control loop equations. The amplifier has enough bandwidth (45° at 4 MHz) and enough gain (60dB) to run Type III compensation schemes with adequate gain and phase margins at cross over frequencies greater than 50kHz.

The common mode output of the error amplifier is 0.9V to 2.2V. Therefore, the PWM voltage ramp has been set between 1.1V and 2.2V to ensure proper 0% to 100% duty cycle capability. The voltage loop also includes two other very important features. One is a non-synchronous startup mode. Basically, the synchronous rectifier cannot turn on unless the high side switch has attempted to turn on or the SS pin has exceeded 1.7V. This feature prevents the controller from "dragging down" the output voltage during startup or in fault modes.

The product (or products) mentioned in this data sheet are no longer being manufactured and may not be ordered (OBS)

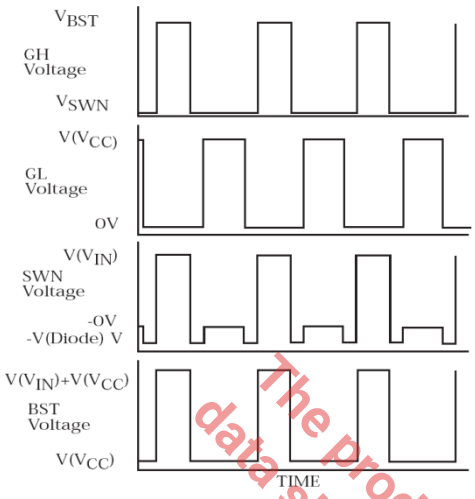

The second feature is a 100% duty cycle timeout that ensures synchronized refreshing of the BST capacitor at very high duty ratios. In the event that the high side NFET is on for 20 continuous clock cycles, a reset is given to the PWM flip flop half way through the 21st cycle. This forces GL to rise for the cycle, in turn refreshing the BST capacitor. The boost capacitor is used to generate a high voltage drive supply for the high side switch, which is V_{CC} above V_{IN}.

INTEGRATED POWER MOSFETS

The SP7662 contains a pair of integrated low resistance N-channel switches designed to drive up to 12A of output current. Care should be taken to de-rate the output current based on the thermal conditions in the system such as ambient temperature, airflow and heat sinking. Maximum output current could be limited by thermal limitations of a particular application by taking advantage of the integrated-over-temperature protective scheme employed in the SP7662. The SP7662 incorporates a built-in over temperature protection to prevent internal overheating.

SETTING OUTPUT VOLTAGES

The SP7662 can be set to different output voltages. The relationship in the following formula is based on a voltage divider from the output to the feedback pin VFB, which is set to an internal reference voltage of 0.80V. Standard 1% metal film resistors of surface mount size 0603 are recommended.

$$V_{OUT} = 0.80V \times \left(1 + \frac{R_1}{R_2}\right)$$

So

$$R_2 = \frac{R_1}{\frac{V_{OUT}}{0.80} - 1}$$

Where R_1 = 10kΩ and for V_{OUT} = 0.80V setting, simply remove R_2 from the board. Furthermore, one could select the value of the R_1 and R_2 combination to meet the exact output voltage setting by restricting the R_1 resistance range such that 10kΩ<R_1<100kΩ for overall system loop stability.

The product (or products) mentioned in this data sheet are no longer being manufactured and may not be ordered (OBS)

APPLICATIONS INFORMATION

INDUCTOR SELECTION

There are many factors to consider in selecting the inductor including core material, inductance vs. frequency, current handling capability, efficiency, size and EMI. In a typical SP7662 circuit, the inductor is chosen primarily for value, saturation current and DC resistance. Increasing the inductor value will decrease output voltage ripple, but degrade transient response. Low inductor values provide the smallest size, but cause large ripple currents, poor efficiency and require more output capacitance to smooth out the larger ripple current. The inductor must be able to handle the peak current at the switching frequency without saturating, and the copper resistance in the winding should be kept as low as possible to minimize resistive power loss. A good compromise between size, loss and cost is to set the inductor ripple current to be within 20% to 40% of the maximum output current.

The switching frequency and the inductor operating point determine the inductor value as follows:

$$L = \frac{V_{OUT} \times (V_{IN(MAX)} - V_{OUT})}{V_{IN(MAX)} \times f_s \times K_R \times I_{OUT(MAX)}}$$

where:

f_s = switching frequency

K_R = ratio of the AC inductor ripple current to the maximum output current

The peak-to-peak inductor ripple current is:

$$I_{PP} = \frac{V_{OUT} \times (V_{IN(MAX)} - V_{OUT})}{V_{IN(MAX)} \times f_s \times L}$$

Once the required inductor value is selected, the proper selection of core material is based on peak inductor current and efficiency requirements. The core must be large enough not to saturate at the peak inductor current

$$I_{PEAK} = I_{OUT(MAX)} + \frac{I_{PP}}{2}$$

and provide low core loss at the high switching frequency. Low cost powdered-iron cores have a gradual saturation characteristic but can introduce considerable AC core loss, especially when the inductor value is relatively low and the ripple current is high. Ferrite materials, although more expensive, have an abrupt saturation characteristic with the inductance dropping sharply when the peak design current is exceeded. Nevertheless, they are preferred at high switching frequencies because they present very low core loss while the designer is only required to prevent saturation. In general, ferrite or molypermalloy materials are a better choice for all but the most cost sensitive applications.

Optimizing Efficiency

The power dissipated in the inductor is equal to the sum of the core and copper losses. To minimize copper losses, the winding resistance needs to be minimized, but this usually comes at the expense of a larger inductor. Core losses have a more significant contribution at low output current where the copper losses are at a minimum, and can typically be neglected at higher output currents where the copper losses dominate. Core loss information is usually available from the magnetics vendor. Proper inductor selection can affect the resulting power supply efficiency by more than 15%!

The copper loss in the inductor can be calculated using the following equation:

$$P_{L(Cu)} = I^2_{L(RMS)} \times R_{WINDING}$$

where $I_{L(RMS)}$ is the RMS inductor current that can be calculated as follows:

$$I_{L(RMS)} = I_{OUT(MAX)} \bullet \sqrt{1 + \frac{1}{3}\left(\frac{I_{PP}}{I_{OUT(MAX)}}\right)^2}$$

Output Capacitor Selection

The required ESR (Equivalent Series Resistance) and capacitance drive the selection of the type and quantity of the output capacitors. The ESR must be small enough that both the resistive voltage deviation due to a step change in the load current and the output ripple voltage do not exceed the tolerance limits expected on the output voltage. During an output load transient, the output capacitor must supply all the additional current demanded by the load until the SP7662 adjusts the inductor current to the new value.

In order to maintain V_{OUT}, the capacitance must be large enough so that the output voltage is held up while the inductor current ramps to the value corresponding to the new load current. Additionally, the ESR in the output capacitor causes a step in the output voltage equal to the current. Because of the fast transient response and inherent 100% to 0% duty cycle capability provided by the SP7662 when exposed to output load transients, the output capacitor is typically chosen for ESR, not for capacitance value.

The ESR of the output capacitor, combined with the inductor ripple current, is typically the main contributor to output voltage ripple. The maximum allowable ESR required to maintain a specified output voltage ripple can be calculated by:

$$R_{ESR} \leq \frac{\Delta V_{OUT}}{I_{PK-PK}}$$

where:

ΔV_{OUT} = peak-to-peak output voltage ripple

The Product(s) mentioned in this data sheet are no longer being manufactured and may not be ordered. (Obs)

I_{PK-PK} = peak-to-peak inductor ripple current

The total output ripple is a combination of the ESR and the output capacitance value and can be calculated as follows:

$$\Delta V_{OUT} = \sqrt{\left(\frac{I_{PP} \bullet (1 - D)}{fs \bullet C_{OUT}}\right)^2 + (I_{PP} \bullet R_{ESR})^2}$$

fs = Switching Frequency
D = Duty Cycle
C_{OUT} = output capacitance value

Input Capacitor Selection

The input capacitor should be selected for ripple current rating, capacitance and voltage rating. The input capacitor must meet the ripple current requirement imposed by the switching current. In continuous conduction mode, the source current of the high-side MOSFET is approximately a square wave of duty cycle V_{OUT}/V_{IN}. More accurately, the current wave form is trapezoidal, given a finite turn-on and turn-off, switch transition slope. Most of this current is supplied by the input bypass capacitors. The RMS current handling capability of the input capacitors is determined at maximum output current and under the assumption that the peak-to-peak inductor ripple current is low, it is given by:

$$I_{CIN(RMS)} = I_{OUT(MAX)} \bullet \sqrt{D(1 - D)}$$

The worst case occurs when the duty cycle D is 50% and gives an RMS current value equal to Iout/2. Select input capacitors with adequate ripple current rating to ensure reliable operation.

The power dissipated in the input capacitor is:

$$P_{CIN} = I^2_{CIN(RMS)} \bullet R_{ESR(CIN)}$$

This can become a significant part of power losses in a converter and hurt the overall energy transfer efficiency. The input voltage ripple primarily depends on the input capacitor ESR and capacitance. Ignoring the inductor ripple current, the input voltage ripple can be determined by:

$$\Delta V_{IN} = I_{OUT(MAX)} \bullet R_{ESR(CIN)} + \frac{I_{OUT(MAX)} \bullet V_{OUT} \bullet (V_{IN} - V_{OUT})}{V_{IN}^2 \bullet fs \bullet C_{IN}}$$

The capacitor type suitable for the output capacitors can also be used for the input capacitors. However, exercise extra caution when tantalum capacitors are used. Tantalum capacitors are known for catastrophic failure when exposed to surge current, and input capacitors are prone to such surge current when power supplies are connected "live" to low impedance power sources. Although tantalum capacitors have been successfully employed at the input, it is generally not recommended.

Loop Compensation Design

The open loop gain of the whole system can be divided into the gain of the error amplifier,

PWM modulator, buck converter output stage, and feedback resistor divider. In order to cross over at the desired frequency cut-off (fco), the gain of the error amplifier must compensate for the attenuation caused by the rest of the loop at this frequency. The goal of loop compensation is to manipulate

loop frequency response such that its crossover gain at 0db, results in a slope of -20db/decade.

The first step of compensation design is to pick the loop crossover frequency. High crossover frequency is desirable for fast transient response, but often jeopardizes the power supply stability. Crossover frequency should be higher than the ESR zero but less than 1/5 of the switching frequency or 60kHz. The ESR zero is contributed by the ESR associated with the output capacitors and can be determined by:

$$f_{Z(ESR)} = \frac{1}{2\pi \cdot C_{OUT} R_{ESR}}$$

The product(s) mentioned in this data sheet are no longer being manufactured and may not be ordered. (OBS)

The next step is to calculate the complex conjugate poles contributed by the LC output filter.

$$f_{P(LC)} = \frac{1}{2\pi\sqrt{LC}}$$

When the output capacitors are of a Ceramic Type, the SP7662 Evaluation Board requires a Type III compensation circuit to give a phase boost of 180° in order to counteract the effects of an under damped resonance of the output filter at the double pole frequency.

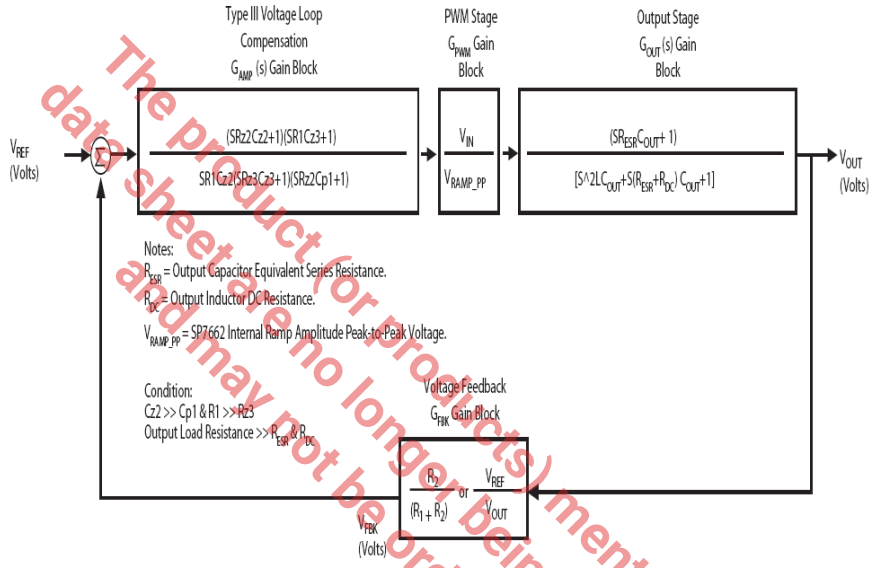

Fig. 22: SP7662 Voltage Mode Control Loop with Loop Dynamic

The product (or products) mentioned in this data sheet are no longer being manufactured and may not be ordered (OBS)

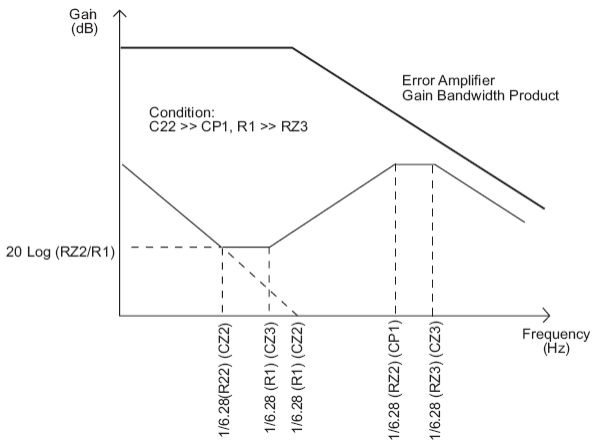

Fig. 23: Bode Plot of Type III Error Amplifier Compensation

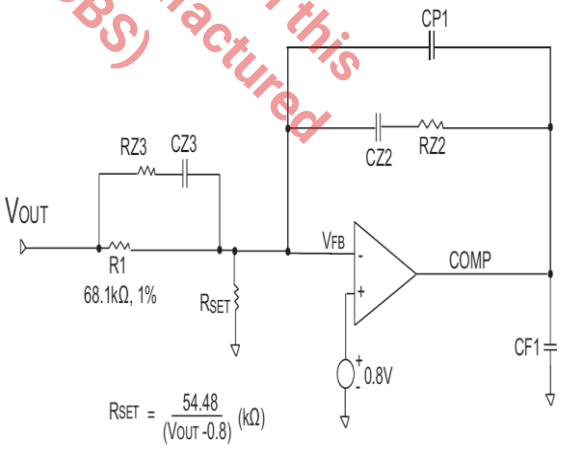

Fig. 24: Type III Error Amplifier Compensation Circuit

TYPICAL APPLICATION

12V TO 3.3V CONVERSION

Efficiency data was produced using this circuit

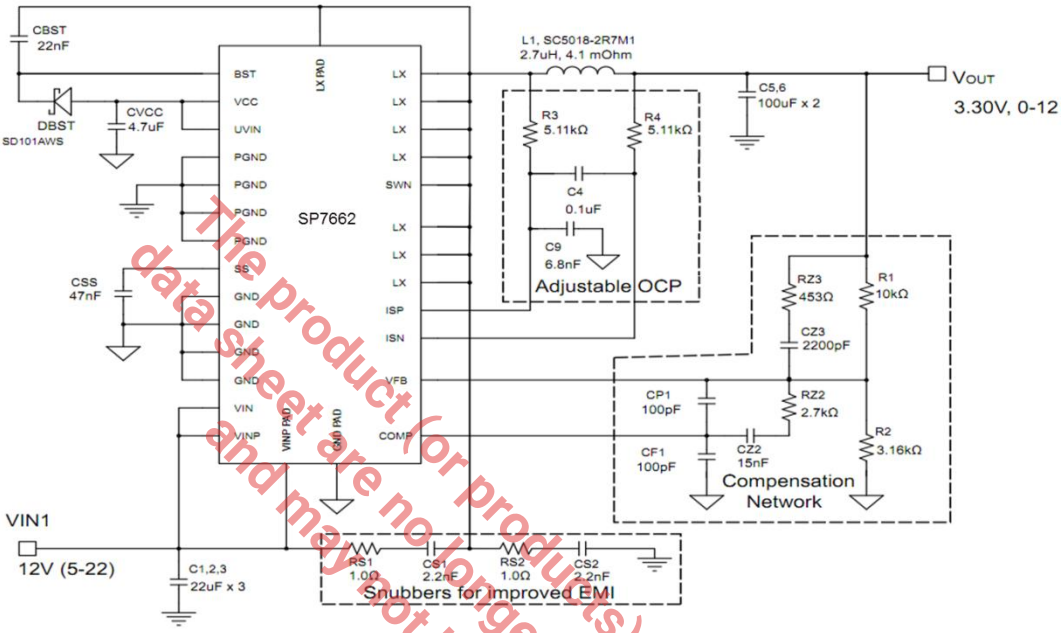

4.5V-5.5V TO 3.3V CONVERSION

Single input voltage configuration

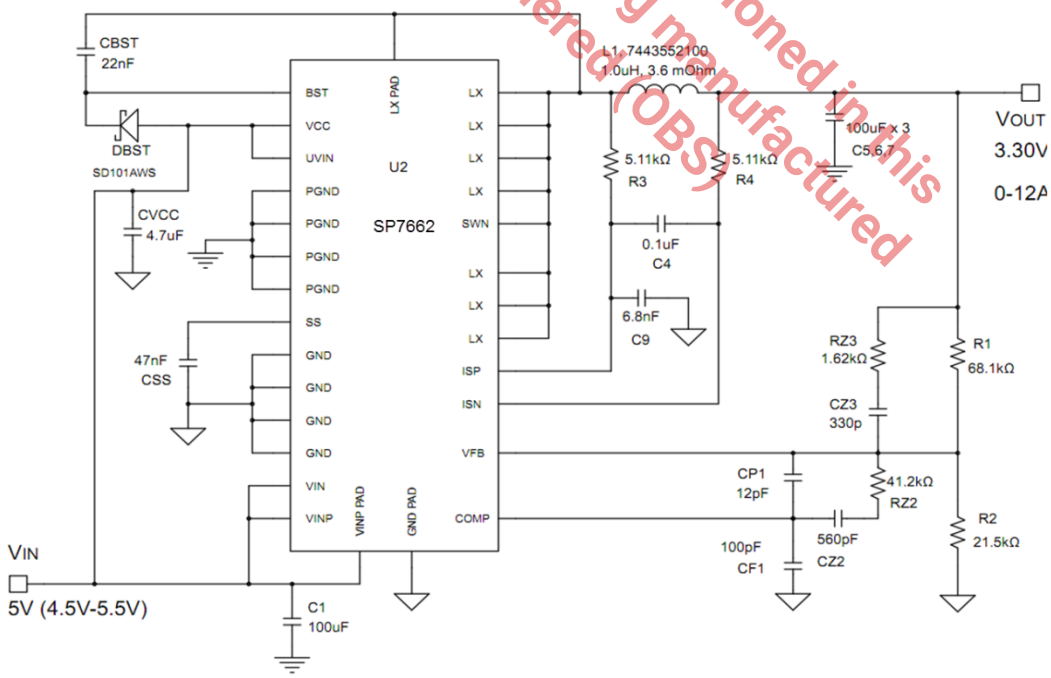

The product (or products) mentioned in this data sheet are no longer being manufactured and may not be ordered (OBS)

18V-22V TO 12V CONVERSION

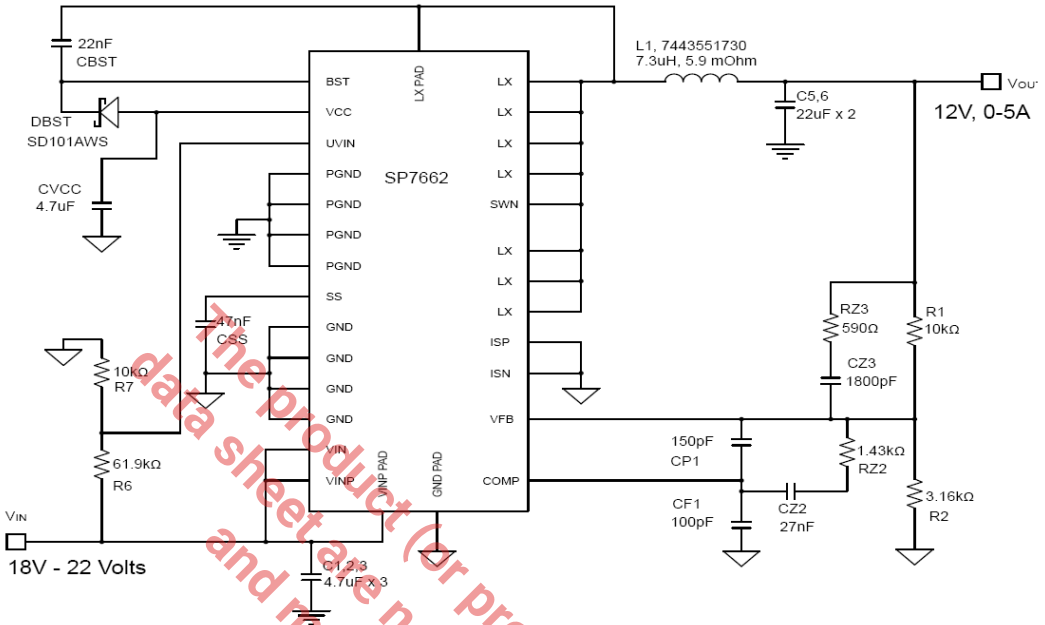

3V-22V TO 2.5V CONVERSION

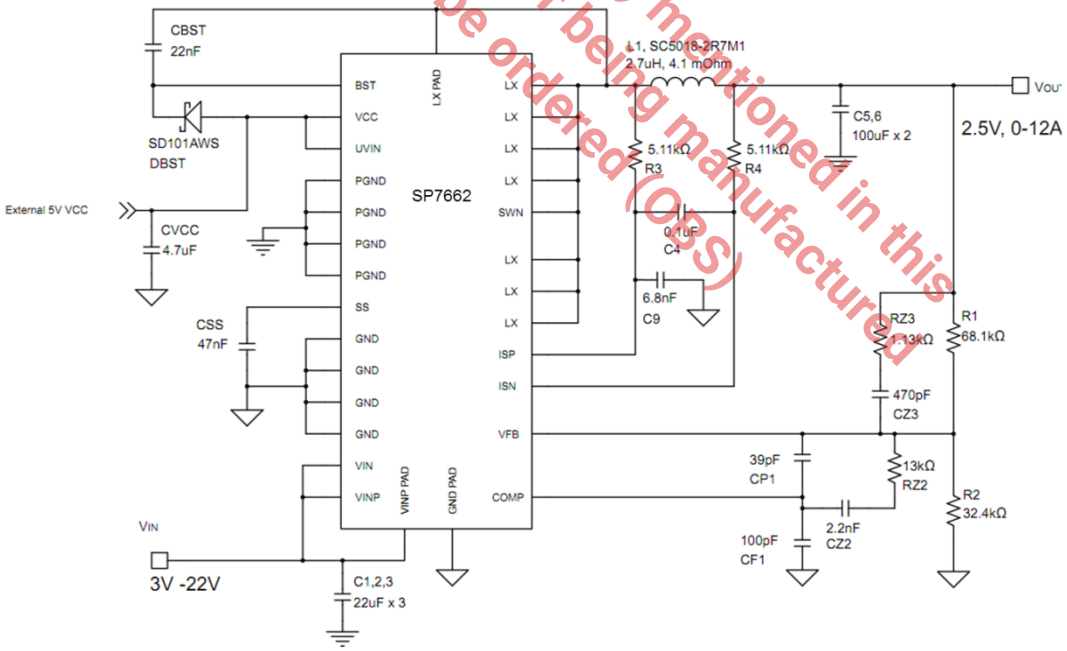

The product (or products) mentioned in this data sheet are no longer being manufactured and may not be ordered (OBS)

PACKAGE SPECIFICATION

26-PIN DFN

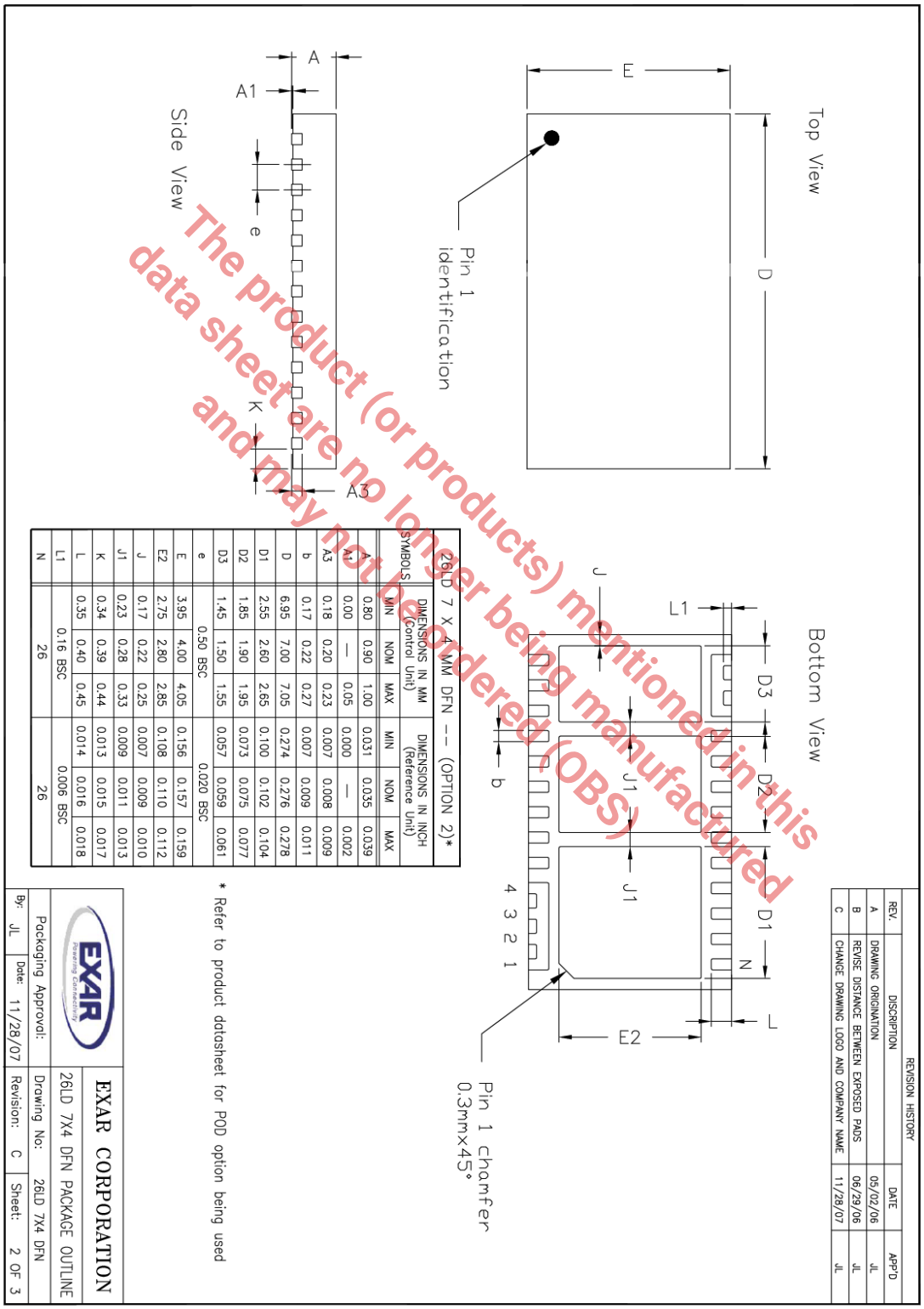

26LD 7 X 4 MM DFN -- (OPTION 2)*						
SYMBOLS	DIMENSIONS IN MM (Control Unit)			DIMENSIONS IN INCH (Reference Unit)		
	MIN	NOM	MAX	MIN	NOM	MAX
A	0.80	0.90	1.00	0.031	0.035	0.039
A1	0.00	—	0.05	0.000	—	0.002
A3	0.18	0.20	0.23	0.007	0.008	0.009
b	0.17	0.22	0.27	0.007	0.009	0.011
D	6.95	7.00	7.05	0.274	0.276	0.278
D1	2.55	2.60	2.65	0.100	0.102	0.104
D2	1.85	1.90	1.95	0.073	0.075	0.077
D3	1.45	1.50	1.55	0.057	0.059	0.061
e	0.50 BSC			0.020 BSC		
E	3.95	4.00	4.05	0.156	0.157	0.159
E2	2.75	2.80	2.85	0.108	0.110	0.112
J	0.17	0.22	0.25	0.007	0.009	0.010
J1	0.23	0.28	0.33	0.009	0.011	0.013
K	0.34	0.39	0.44	0.013	0.015	0.017
L	0.35	0.40	0.45	0.014	0.016	0.018
L1	0.16 BSC			0.006 BSC		
N	26			26		

* Refer to product datasheet for POD option being used

REVISION HISTORY			
REV.	DISCRIPTION	DATE	APP'D
A	DRAWING ORIGINATION	05/02/06	JL
B	REVISE DISTANCE BETWEEN EXPOSED PADS	06/29/06	JL
C	CHANGE DRAWING LOGO AND COMPANY NAME	11/28/07	JL

EXAR CORPORATION

26LD 7X4 DFN PACKAGE OUTLINE

Packaging Approval:	Drawing No:	26LD 7X4 DFN
By: JL	Revision: C	Sheet: 2 OF 3
Date: 11/28/07		

The product (or products) mentioned in this data sheet are no longer being manufactured and may not be ordered (OBS).

REVISION HISTORY

Revision	Date	Description
2.0.0	03/23/2010	Reformat of Datasheet Changed high side switch RDSON typical from 16.8mΩ to 21mΩ Changed high side switch RDSON maximum from 20.5mΩ to 25mΩ Changed low side switch RDSON typical from 6.8mΩ to 9mΩ Changed low side switch RDSON maximum from 8.5mΩ to 15mΩ Change ESD HBM ratings for pin LX. VINP and PGND to 400V
2.1.0	09/13/2012	Added new Exar logo Corrected location of capacitor 6.8nF from ISN to ISP in figure 1, C9 in typical application diagrams

The product (or products) mentioned in this data sheet are no longer being manufactured and may not be ordered (OBS)

FOR FURTHER ASSISTANCE

Email: customersupport@exar.com

Exar Technical Documentation: http://www.exar.com/TechDoc/default.aspx?

EXAR CORPORATION

HEADQUARTERS AND SALES OFFICES

48720 Kato Road

Fremont, CA 94538 – USA

Tel.: +1 (510) 668-7000

Fax: +1 (510) 668-7030

www.exar.com

NOTICE

EXAR Corporation reserves the right to make changes to the products contained in this publication in order to improve design, performance or reliability. EXAR Corporation assumes no responsibility for the use of any circuits described herein, conveys no license under any patent or other right, and makes no representation that the circuits are free of patent infringement. Charts and schedules contained here in are only for illustration purposes and may vary depending upon a user's specific application. While the information in this publication has been carefully checked; no responsibility, however, is assumed for inaccuracies.

EXAR Corporation does not recommend the use of any of its products in life support applications where the failure or malfunction of the product can reasonably be expected to cause failure of the life support system or to significantly affect its safety or effectiveness. Products are not authorized for use in such applications unless EXAR Corporation receives, in writing, assurances to its satisfaction that: (a) the risk of injury or damage has been minimized; (b) the user assumes all such risks; (c) potential liability of EXAR Corporation is adequately protected under the circumstances.

Reproduction, in part or whole, without the prior written consent of EXAR Corporation is prohibited.