SP3224E-SP3227E

3.0V to 5.5V RS-232 Transceivers with Auto On-Line® Plus

FEATURES

- 15kV ESD protected RS-232 I/O pins
- Auto On-line® Plus automatic power saving mode
- Meets true EIA/TIA-232-F standards from +3.0V to +5.5V power supply.
- Adheres to EIA/TIA-562 for interoperability with EIA/TIA-232 down to a +2.7V supply voltage
- Regulated charge pump yields stable RS-232 outputs
- Drop-in replacement to MAX3224, ICL3224, MAX3225, ICL3225, MAX3226, ICL3226, MAX3227 and ICL3227
- SP3224E and SP3226E reduced EMI with a slew rate controlled 250kbps data rate
- SP3225E and SP3227E- high speed data rate of 1 Mbps.
- Available in RoHS compliant, Lead Free Packaging

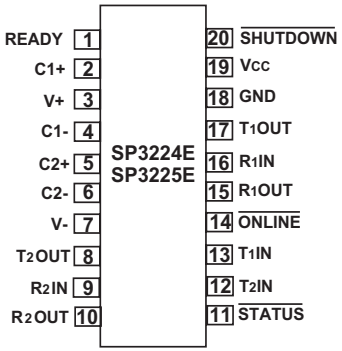

TYPICAL APPLICATIONS

- Diagnostic/Serial ports on embedded applications
- Handheld Test Equipment
- PC related Peripherals and Equipment
- Battery Powered Equipment
- Point-of-sale Equipment
- Set-top Box

The product (or products) mentioned in this data sheet are no longer being manufactured. It may not be ordered (OBS)

DESCRIPTION

The SP3224E/3225E are 2-driver/2-receiver devices and the SP3226E/SP3227E are 1-driver/1-receiver devices. All are ideal for computer peripherals, point-of-sale equipment, consumer and embedded applications. These devices use an internal high-efficiency, charge-pump power supply that requires only 0.1µF capacitors in 3.3V operation. This charge pump and Exar's driver architecture allow it to deliver compliant RS-232 performance from a single power supply ranging from +3.0V to +5.5V. At voltages between 2.7V and 3.0V the driver outputs are compliant with RS-562 and can interface to RS-232 over short cables.

The Auto On-line® Plus feature allows the device to automatically "wake-up" during a shutdown state upon detecting activity and to enter a low power shutdown if idle. This power saving feature functions without system intervention or modifications to software or drivers.

SELECTION TABLE

All devices feature 3.0V to 5.5V power supply, 4 small charge pump capacitors, and 15kV ESD protection.

Device	Data Rate (bps)	No. of Drivers/Receivers	READY pin	Low-Power Shutdown	Package
SP3224E	250k	2/2	Yes	Auto On-Line® Plus	20 SSOP/TSSOP
SP3225E	1M	2/2	Yes	Auto On-Line® Plus	20 SSOP/TSSOP
SP3226E	250k	1/1	Yes	Auto On-Line® Plus	16 SSOP/TSSOP
SP3227E	1M	1/1	Yes	Auto On-Line® Plus	16 SSOP/TSSOP

ABSOLUTE MAXIMUM RATINGS

Supply Voltage (Vcc).....-0.3V to + 6.0V
V+ (Note 1).....-0.3V to + 7.0V
V- (Note 1).....+0.3V to - 7.0V
|V+| + |V-| .....+13V
Input voltage at TTL input pins .....-0.3V to Vcc+0.3V
RxIN..... ±16V
Driver output (from Ground)..... ±13.2V
RxOUT, $\overline{\text{STATUS}}$.....-0.3V to Vcc+0.3V
Short Circuit Duration, TxOUT to GND,. Continuous
(One output at a time maximum)
Storage Temperature.....-65°C to +150°C
Operating Temperature SP322XECX.....0°C to +70°C
Operating Temperature SP322XEEX.....-40°C to +85°C
Lead Temperature (soldering, 10s)..... +300°C

Note 1: V+ and V- can have maximum magnitudes of 7V, but their absolute difference cannot exceed 13V.

Maximum junction temperature.....150°C
Thermal Derating, Junction to Ambient
SSOP20.....θ_{JA} =83°C/W
TSSOP20.....θ_{JA} =110.7°C/W
SSOP16.....θ_{JA} =87°C/W
TSSOP16.....θ_{JA} =100.4°C/W

These are stress ratings only and functional operation of the device at these ratings or any other above those indicated in the operation sections of the specifications below is not implied. Exposure to absolute maximum rating conditions for extended periods of time may affect reliability.

ELECTRICAL SPECIFICATIONS

Unless otherwise noted Vcc = +3.0V to +5.5V, T_{AMB} = T_{MIN} to T_{MAX},. Typical values are at T_{AMB} = +25°C. C1–C4 = 0.1µF tested at 3.3V ±10%. C1=0.047µF C2–C4 = 0.33µF tested at 5V ±10%.

Parameters		Symb	Test Conditions	Min.	Typ.	Max.	Unit
DC Characteristics							
Supply Current, Auto On-Line® Plus		I_{CC3}	Receivers idle, TxIN = Vcc or GND, $\overline{\text{ONLINE}}$ = GND, $\overline{\text{SHUTDOWN}}$ = Vcc Note 2		1	10	µA
Supply Current, Shutdown		I_{CC2}	$\overline{\text{SHUTDOWN}}$ = GND		1	10	µA
Supply Current, Active		I_{CC1}	$\overline{\text{ONLINE}}$ = $\overline{\text{SHUTDOWN}}$ = Vcc, No Load		1.5	3.0	mA
Supply Current, Active		I_{CC1}	$\overline{\text{ONLINE}}$ = $\overline{\text{SHUTDOWN}}$ = V_{CC}=3.3V, No Load		0.7	2.0	mA
Driver Input and Logic Input Pins							
Logic Input Voltage	High	V_{IH}	Vcc = 3.3V	2			V
		V_{IH}	Vcc = 5.0V	2.4			
	Low	V_{IL}				0.8	
	Logic Threshold	V_T			1.5		
Logic Input Leakage Current		I_{IL}			0.05	±1.0	µA
Logic Input Hysteresis		V_{HYS}			100		mV
Receiver Outputs and $\overline{\text{STATUS}}$ Output							
Receiver Output Voltage Low		V_{OL}	I_{OUT} = -1.6mA			0.4	V
Receiver Output Voltage High		V_{OH}	I_{OUT} = 1mA	Vcc - 0.6			V

Note 2: Characterized, not 100% tested.

The product (or products) mentioned in this data sheet are no longer being manufactured and may not be ordered (OBS)

ELECTRICAL SPECIFICATIONS

Unless otherwise noted V_{CC} = +3.0V to +5.5V, T_{AMB} = T_{MIN} to T_{MAX},. Typical values are at T_{AMB} = +25°C. C1–C4 = 0.1µF tested at 3.3V ±10%. C1=0.047µF C2–C4 = 0.33µF tested at 5V ±10%.

Parameters	Symb	Test Conditions	Min.	Typ.	Max.	
Driver Outputs						
Output Voltage Swing	V_O	Output load = 3kΩ to GND	±5.0	±6.0		V
		Output load = Open Circuit			±15.0	
Short Circuit Current		V_{OUT} = 0V			±60	mA
Power-Off Impedance		Vcc=V+ = V- = 0 transmitter outputs= ±2V	300	10M		Ω
Output Leakage Current		Vcc = 0 or 3V to 3.3V, V_{OUT} = ±12V, Drivers disabled			±25	µA
Receiver Inputs						
Input Voltage Range			-15		15	V
Input Threshold Low		Vcc = 3.3V	0.6	1.2		V
		Vcc = 5.0V	0.8	1.5		
Input Threshold High		Vcc = 3.3V		1.5	2.4	V
		Vcc = 5.0V		1.8	2.4	
Input Hysteresis				500		mV
Input Resistance			3	5	7	kΩ
ESD Protection						
ESD Protection for R_In, T_Out pins		Human Body Model		±15		kV
All Other Pins		Human Body Model		±2		kV
Auto On-line® Plus ($\overline{ONLINE}$ = GND, $\overline{SHUTDOWN}$ = Vcc)						
Rx Input Threshold to $\overline{STATUS}$ output high					±2.7	V
Rx Input Threshold to $\overline{STATUS}$ output low			±0.3			V
Threshold to $\overline{STATUS}$ high	t_{STH}			0.5		µs
Threshold to $\overline{STATUS}$ low	t_{STL}			30		µs
Rx or Tx transition to drivers enabled	t_{ONLINE}	Note 3		100		µs
Last Rx or Tx transition to drivers disabled	$t_{OFFLINE}$	Note 2, 3	15	30	60	sec

Note 3: A transmitter/receiver edge is defined as a transition through input logic thresholds.

The product (or products) mentioned in this data sheet are no longer being manufactured and may not be ordered (OBS)

TIMING CHARACTERISTICS

Unless otherwise noted V_{CC} = +3.0V to +5.5V, T_{AMB} = T_{MIN} to T_{MAX},. Typical values are at T_{AMB} = +25°C. C1–C4 = 0.1µF tested at 3.3V ±10%. C1=0.047µF C2–C4 = 0.33µF tested at 5V ±10%

Parameters	Symbol	Test Conditions	Min.	Typ.	Max.	Unit
SP3224E and SP3226E						
Maximum Data Rate		R_L = 3kΩ, C_L = 1000pF. One transmitter switching.	250			kbps
Transition -Region Slew Rate		Measurement taken from +3.0V to -3.0V or -3.0V to +3.0V, T_{AMB} = 25°C R_L = 3kΩ to 7kΩ, C_L = 150pF to 1000pF	4		30	V/µs
Receiver Propagation Delay	t_{RPHL} , t_{RPLH}	R_IN to R_OUT, C_L = 150pF		0.22		µs
Receiver Output Enable Time	t_{RZH} , t_{RZL}	R_L = 3kΩ, C_L = 150pF		0.2	2	µs
Receiver Output Disable Time	t_{RHZ} , t_{RLZ}			0.2	2	µs
Receiver Skew	$\lvert t_{PHL} - t_{PLH} \rvert$	at 1.5V		200		ns

Parameters	Symbol	Test Conditions	Min.	Typ.	Max.	Unit
SP3225E and SP3227E						
Maximum Data Rate		R_L = 3kΩ, C_L = 250pF. One transmitter Switching	1000			kbps
		R_L = 3kΩ, C_L = 1000pF. One transmitter Switching	500			kbps
Instantaneous Slew Rate		Measurement taken from +3.0V to -3.0V or -3.0V to +3.0V, T_{AMB}=25°C R_L = 3kΩ to 7kΩ, C_L = 150pF to 250pF	24		150	V/µs
Driver Skew	$\lvert t_{DPHL} - t_{DPLH} \rvert$	at zero crossing		75		ns
Receiver Propagation Delay	t_{RPHL} , t_{RPLH}	R_IN to R_OUT, C_L = 150pF		0.20		µs
Receiver Output Enable Time	t_{RZH} , t_{RZL}			0.3	2	µs
Receiver Output Disable Time	t_{RHZ} , t_{RLZ}			0.2	2	µs
Receiver Skew	$\lvert t_{PHL} - t_{PLH} \rvert$	at 1.5V		80		ns

The product (or products) mentioned in this data sheet are no longer being manufactured and may not be ordered (OBS)

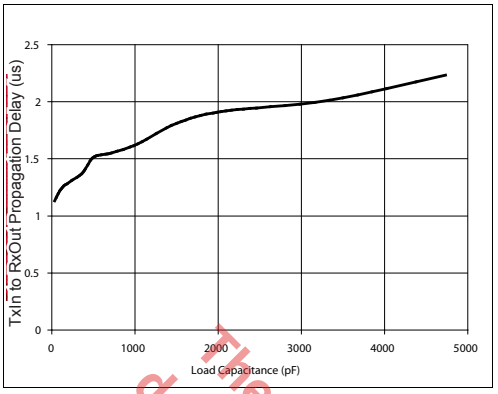

SP3224E/SP3226E Transmitter Input to Receiver Output Propagation Delay vs. Load Capacitance

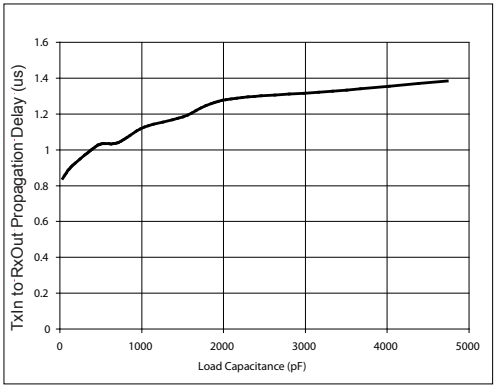

SP3225E/SP3227E Transmitter Input to Receiver Output Propagation Delay vs. Load Capacitance

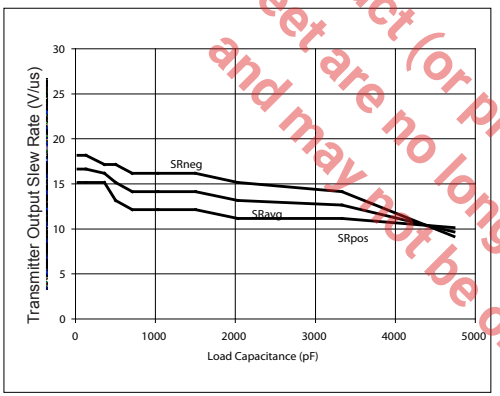

SP3224E/SP3226E Transmitter Output Slew Rate vs. Load Capacitance

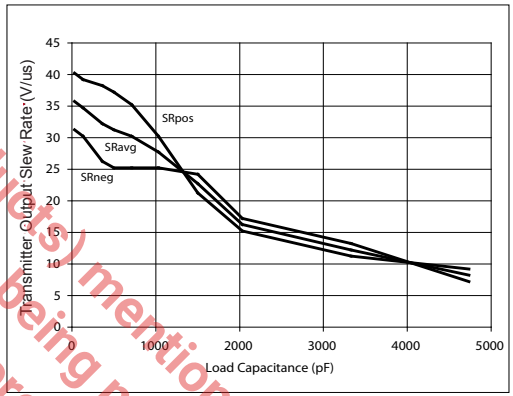

SP3225E/SP3227E Transmitter Output Slew Rate vs. Load Capacitance

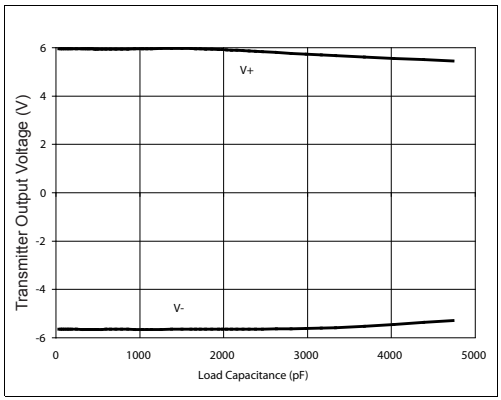

SP3224E/SP3226E Transmitter Output Voltage vs. Load Capacitance

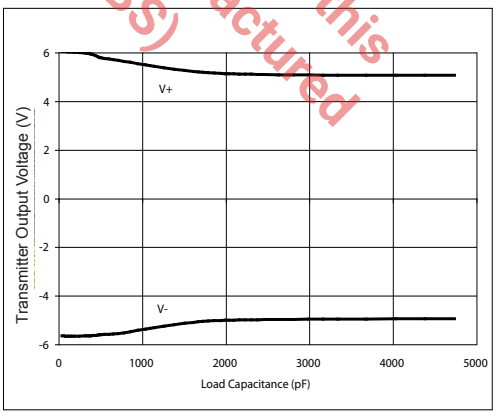

SP3225E/SP3227E Transmitter Output Voltage

The product (or products) mentioned in this datasheet are no longer being manufactured and may not be ordered (OBS)

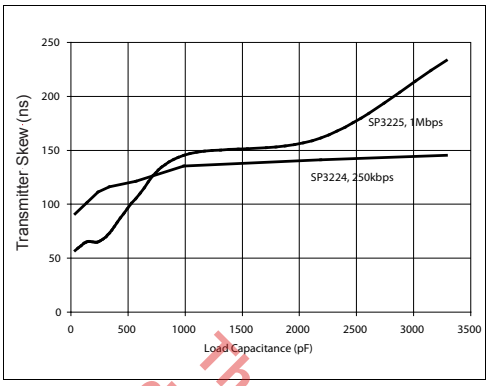

Driver Skew
vs. Load Capacitance

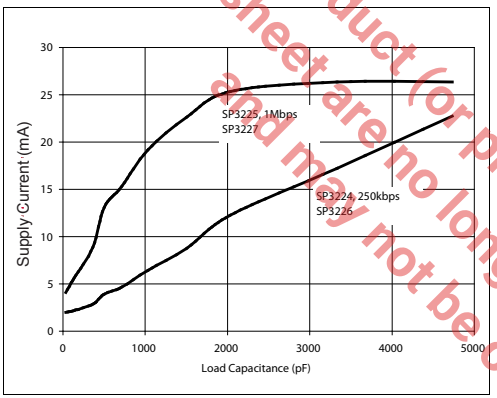

Supply Current
vs. Load Capacitance

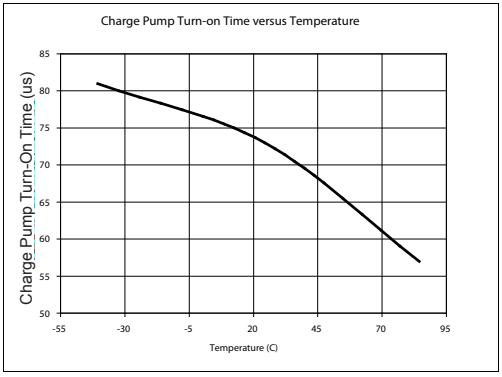

Charge Pump Turn-On Time
vs. Temperature

The product (or products) mentioned in this data sheet are no longer being manufactured and may not be ordered (OBS)

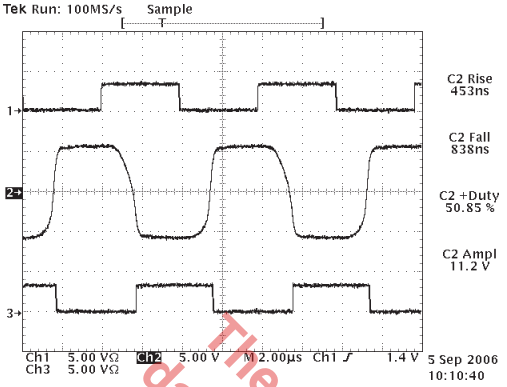

SP3224E/SP3226E Waveforms for 250kbps Clock Rate, RL=3kΩ, CL=1000pF

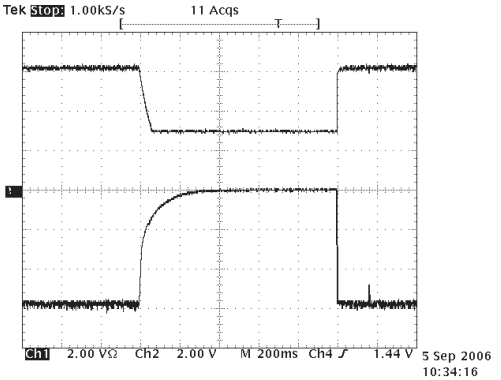

SP3224E/SP3226E Charge Pump Into Shutdown

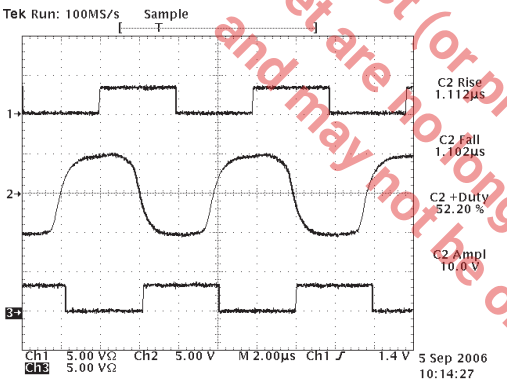

SP3224E/SP3226E Waveforms for 250kbps Clock Rate, RL=3kΩ, CL=4700pF

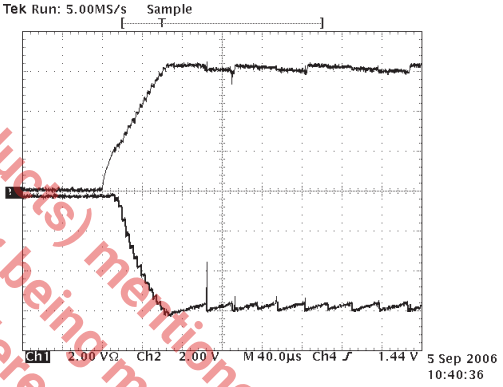

SP3224E/SP3226E Charge Pump Power On Time, Vcc=3.3V

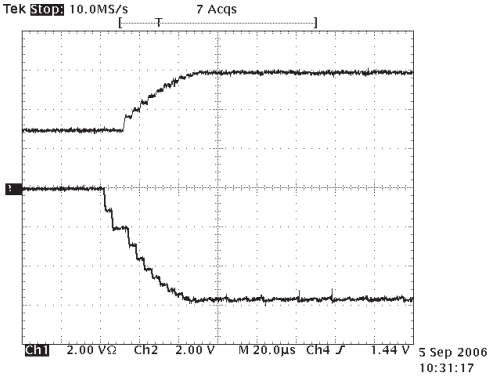

SP3224E/SP3226E Charge Pump Out of Shutdown

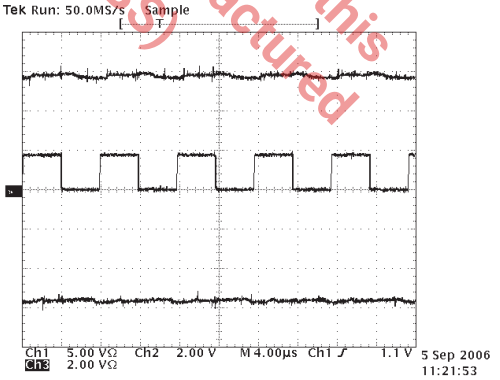

SP3224E/SP3226E Charge Pump Waveforms for 250kbp Clock Rate

All Charge Pump waveforms use charge pump capacitor values C1-C4 = 0.1µF

The product (or products) mentioned in this datasheet are no longer being manufactured and may not be ordered. (OBS)

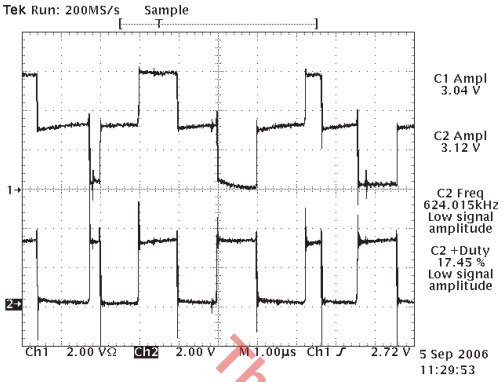

SP3224E/SP3226E C2+ Charge Pump Waveforms, Vcc=3.3V, All Channels switching

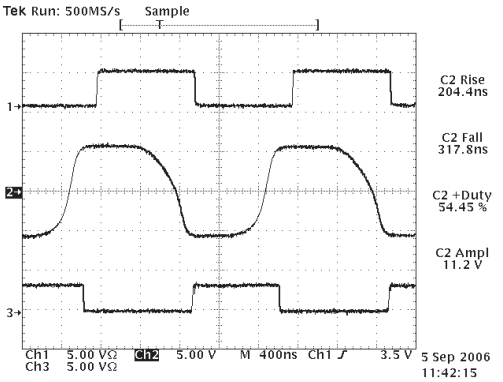

SP3225E/SP3227E Waveforms for 1Mbps Clock Rate, RL=3KΩ, CL=250pF

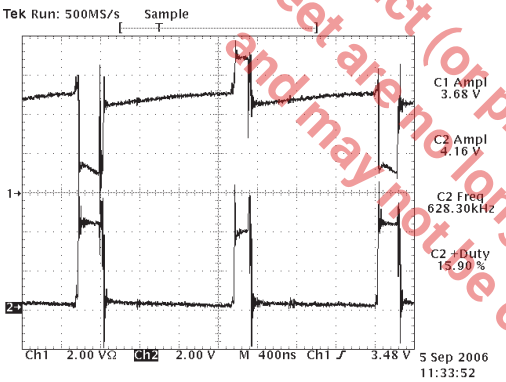

SP3224E/SP3226E C2+ Charge Pump Waveforms, Vcc=5V, All Channels switching

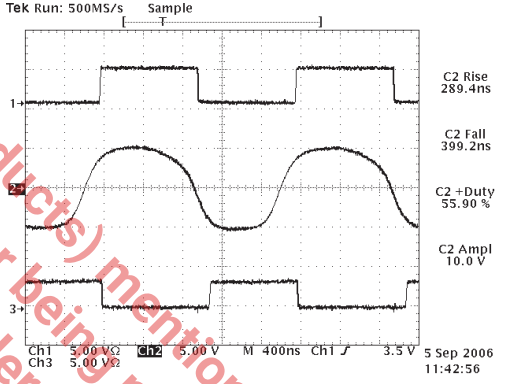

SP3225E/SP3227E Waveforms for 1Mbps Clock Rate, RL=3KΩ, CL=1000pF

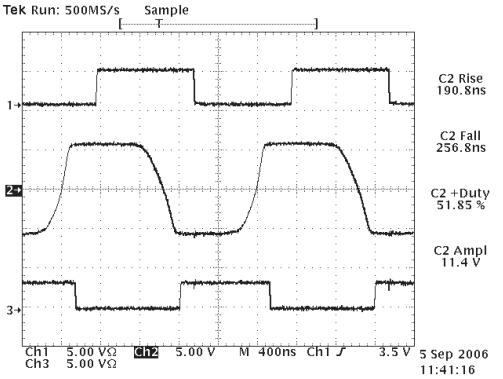

SP3225E/SP3227E Waveforms for 1Mbps Clock Rate, RL=3KΩ, CL=50pF

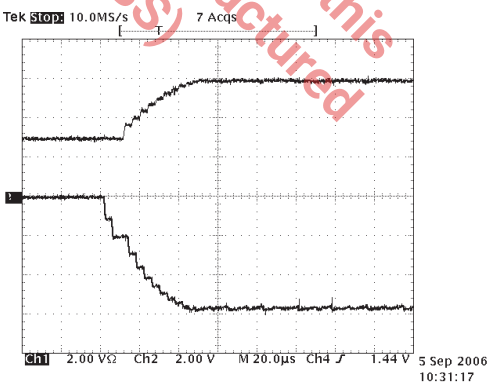

SP3225E/SP3227E Charge Pump Out of Shutdown

All Charge Pump waveforms use charge pump capacitor values C1-C4 = 0.1µF

The product (or products) mentioned in this data sheet are no longer being manufactured and may not be ordered (OBS)

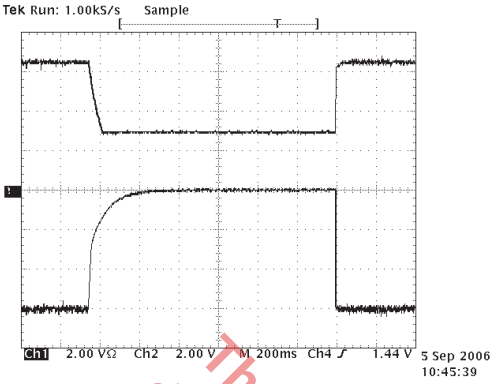

SP3225E/SP3227E Charge Pump Into Shutdown

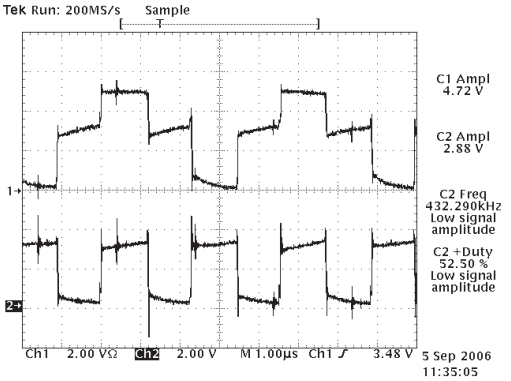

SP3225E/SP3227E Charge Pump Waveforms, Vcc=3.3V, All Channel Switching

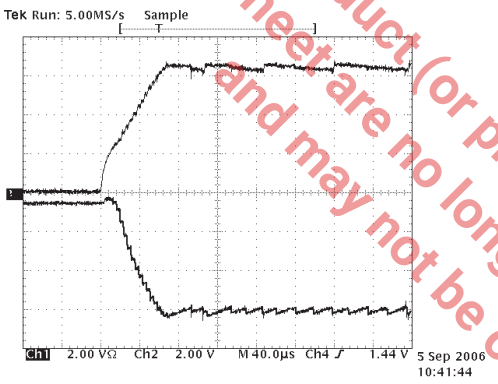

SP3225E/SP3227E Charge Pump Power On Time, Vcc=3.3V

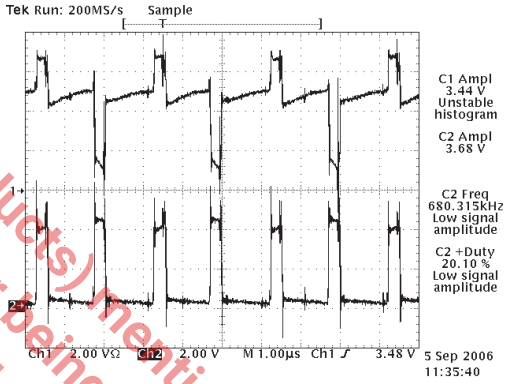

SP3225E/SP3227E Charge Pump Waveforms, Vcc=5V, All Channel Switching

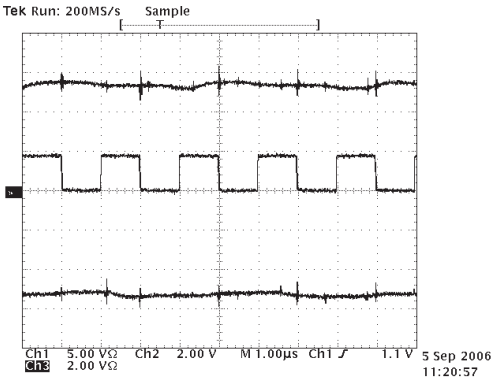

SP3225E/SP3227E Charge Pump Waveforms for 1Mbps Clock Rate

All Charge Pump waveforms use charge pump capacitor values C1-C4 = 0.1µF

The product (or products) mentioned in this data sheet are no longer being manufactured and may not be ordered (OBS)

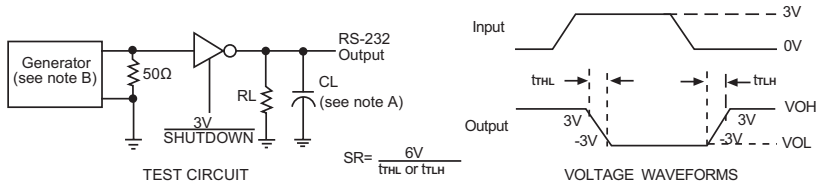

NOTES A. CL includes probe and jig capacitance
B. The pulse generator has the following characteristics: PRR= 250kbit/s, Zo=50Ω, 50% duty cycle, t_r ≤10ns, t_f ≤10ns

Figure 1. Driver Slew Rate

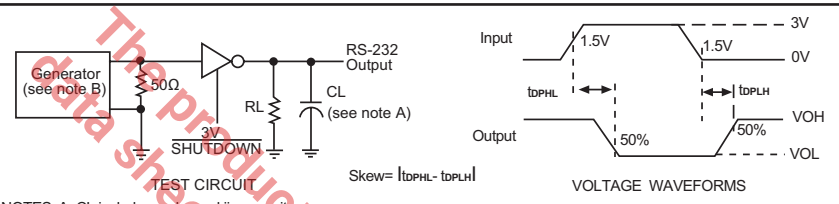

NOTES A. CL includes probe and jig capacitance
B. The pulse generator has the following characteristics: PRR= 250kbit/s, Zo=50Ω, 50% duty cycle, t_r ≤10ns, t_f ≤10ns

Figure 2. Driver Propagation and Skew

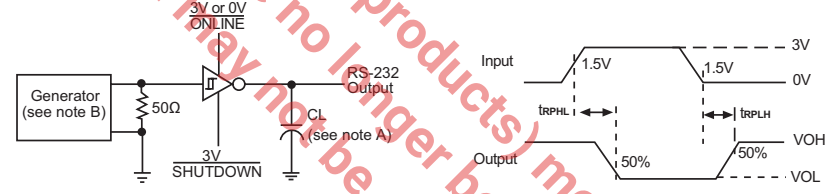

NOTES A. CL includes probe and jig capacitance
B. The pulse generator has the following characteristics: PRR= 250kbit/s, Zo=50Ω, 50% duty cycle, t_r ≤10ns, t_f ≤10ns

Figure 3. Receiver Propagation Delay and Skew

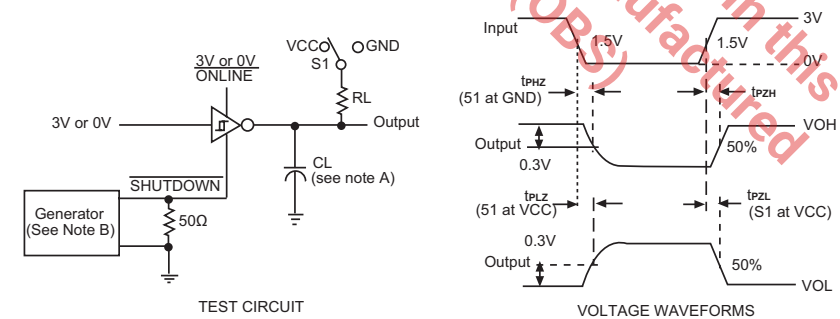

NOTES: A CL includes probe and jig capacitance
B. The pulse generator has the folowing characteristics Zo=50Ω, 50% duty cycle, t_r ≤10ns, t_f ≤10ns
C. t_{PLZ} and t_{PHZ} are the same as t_{dis}
D. t_{PZL} and t_{PZH} are the same as t_{en}

Figure 4. Receiver Enable and Disable Times

The product (or products) mentioned in this data sheet are no longer being manufactured and may not be ordered (OBS)

Description

The SP3224E and SP3225E are 2-driver/2-receiver devices. The SP3226E and SP3227E are 1-driver/1-receiver devices. All are ideal for serial ports in embedded, consumer, portable, or handheld applications. The transceivers meet the EIA/TIA-232 and ITU-T V.28/V.24 communication protocols for reliable serial communication. The devices feature Exar's proprietary and patented (U.S. 5,306,954) on-board charge pump circuitry that generates ±5.5V RS-232 voltage levels from a single +3.0V to +5.5V power supply.

The SP3224E-SP3227E are ideal choices for power sensitive designs. With the Auto On-line® Plus enabled, the SP3224E-SP3227E reduce supply current to 1µA whenever the transceivers are in idle. In shutdown, the internal charge pump and the drivers will shut down. This feature allows design engineers to address power saving concerns without major design changes.

Theory Of Operation

The SP3224E-SP3227E are made up of four basic circuit blocks: 1. Drivers, 2. Receivers, 3. the Exar proprietary charge pump, and 4. Auto On-line® Plus circuitry.

Drivers

The drivers are inverting level transmitters that convert TTL or CMOS logic levels to 5.0V EIA/TIA-232 levels with an inverted sense relative to the input logic levels. Typically, the RS-232 output voltage swing is +5.4V with no load and +5V minimum fully loaded. The driver outputs are protected against infinite short-circuits to ground without degradation in reliability. These drivers comply with the EIA-TIA-232-F and all previous RS-232 versions. Unused driver inputs should be connected to GND or VCC.

The drivers can guarantee output data rates fully loaded with 3KΩ in parallel with 1000pF (SP3224E/SP3226E), or 3KΩ in parallel with 250pF (SP3225E/SP3227E) ensuring compatibility with PC-to-PC communication software. The slew rate of the driver output on the SP3224E/SP3226E is internally limited to a maximum of 30V/µs in order to meet the EIA standards (EIA RS-232D 2.1.7, Paragraph 5). The Slew Rate of SP3225E/SP3227E is not limited to enable higher speed data transfers. The transition of the loaded output from HIGH to LOW also meets the monotonic signal transition requirements of the standard.

Receivers

The receivers convert EIA/TIA-232 signal levels to TTL or CMOS logic output levels. Receivers remain active during device shutdown. Since receiver input is usually from a transmission line where long cable lengths and system interference can degrade the signal, the inputs have a typical hysteresis margin of 500mV. This ensures that the receiver is virtually immune to noisy transmission lines. Should an input be left unconnected, an internal 5KΩ pulldown resistor to ground will commit the output of the receiver to a HIGH state.

Charge Pump

The charge pump is a Exar–patented design (US Patent #5,306,954) and uses a unique approach compared to older less-efficient designs. The charge pump still requires four external capacitors, but uses a four phase voltage shifting technique to attain symmetrical 5.5V power supplies. The internal power supply consists of a regulated dual charge pump that provides output voltages 5.5V regardless of the input voltage (Vcc) over the +3.0V to +5.5V range. This is important to maintain compliant RS-232 levels regardless of power supply fluctuations.

The charge pump operates in a discontinuous mode using an internal oscillator. If the output voltages are less than a magnitude

The product (or product(s) mentioned in this data sheet are no longer being manufactured and may not be ordered (OBS).

of 5.5V, the charge pump is enabled. If the output voltages exceed a magnitude of 5.5V, the charge pump is disabled. This oscillator controls the four phases of the voltage shifting. A description of each phase follows.

Highly Efficient Charge Pump

The charge pump is used to generate positive and negative signal voltages for the RS-232 drivers. This enables fully compliant RS-232 and V.28 signals from a single 3.0 or 5.5V power supply.

The charge pumps use four external capacitors to hold and transfer electrical charge. The Exar patented design (US Patent #5,306,954) uses a unique approach compared to older less efficient designs. The pumps use a four–phase voltage shifting technique to attain symmetrical V+ and V- power supplies. An intelligent control oscillator regulates the operation of the charge pump to maintain the proper voltages at maximum efficiency.

Phase 1

V_{SS} charge store and double: The positive terminals of capacitors C1 and C2 are charged from V_{CC} with their negative terminals initially connected to ground. C1+ is then connected to ground and the stored charge from C1– is superimposed onto C2– . Since C2+ is still connected to V_{CC} the voltage potential across capacitor C2 is now 2 x V_{CC}.

Phase 2

V_{SS} transfer and invert: Phase two connects the negative terminal of C2 to the V_{SS} storage capacitor and the positive terminal of C2 to ground. This transfers the doubled and inverted (V–) voltage onto C4. Meanwhile, capacitor C1 charged from V_{CC} to prepare it for its next phase.

Phase 3

V_{DD} charge store and double: Phase three is identical to the first phase. The positive terminals of capacitors C1 and C2 are charged from V_{CC} with their negative terminals initially connected to ground. C1+ is then connected to ground and the stored charge from C1– is superimposed onto C2–. Since C2+ is still connected to V_{CC} the voltage potential across capacitor C2 is now 2 x V_{CC}.

Phase 4

V_{DD} transfer: The fourth phase connects the negative terminal of C2 to ground and the positive terminal of C2 to the V_{DD} storage capacitor. This transfers the doubled (V+) voltage onto C3. Meanwhile, capacitor C1 charged from V_{CC} to prepare it for its next phase.

The Exar charge pump generates V+ and V– independently from V_{CC}. Hence in a no-load condition V+ and V- will be symmetrical. Older charge pump approaches generate V+ and then use part of that stored charge to generate V-. Because of inherent losses the magnitude of V- will be smaller than V+ on these older designs.

Under lightly loaded conditions the intelligent pump oscillator maximizes efficiency by running only as needed to maintain V+ and V–. Since interface transceivers often spend much of their time at idle this power-efficient innovation can greatly reduce total power consumption. This improvement is made possible by the independent phase sequence of the Exar charge pump design.

The clock rate for the charge pump typically operates at greater than 70kHz allowing the pump to run efficiently with small 0.1µF capacitors. Efficient operation depends on rapidly charging and discharging C1 and C2, therefore capacitors should be mounted close to the IC and have low ESR (equivalent series resistance). Inexpensive surface mount ceramic capacitors (such as

The product (or produces) mentioned in this data sheet are no longer being manufactured and may not be ordered (obs)

are widely used for power-supply decoupling) are ideal for use on the charge pump. The charge pumps are designed to be able to function properly with a wide range of capacitor styles and values. If polarized capacitors are used the positive and negative terminals should be connected as shown on the Typical Operating Circuit.

Capacitance values may be increased if operating at higher Vcc or to provide greater stability as the capacitors age.

The SP3224E-SP3227E devices have the advanced Auto On-Line® Plus feature RS-232 signals use both positive and negative voltages of greater than ±5V magnitude. Receivers have nominal 5kΩ impedance to ground. Even when idle, drivers will maintain output signal voltage creating a continuous current flow. In low power, battery operated devices this constant current drain can decrease battery life significantly.

This product (or products) mentioned in this data sheet are no longer being manufactured and may not be ordered (OBS)

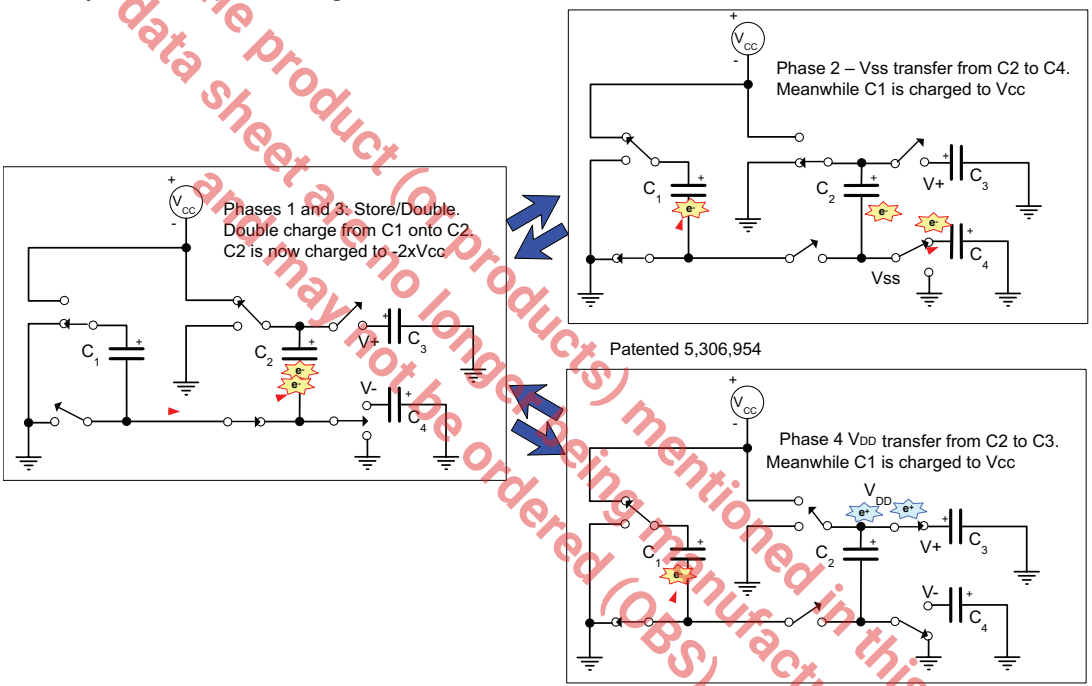

Charge Pump Phases

Minimum Recommended Charge Pump Capacitor Values	
Input Voltage Vcc	Charge Pump Capacitor Value for SP32XX
3.0V to 3.6V	C1-C4=0.1µF
4.5V to 5.5V	C1=0.047µF, C2-C4=0.33µF
3.0V to 5.5V	C1-C4=0.22µF

Charge Pump Capacitor Values

that saves power by turning off the charge pumps and driver outputs when the transceiver inputs are idle for more than 30 seconds. Auto On-line® Plus is equivalent to Maxim's "Auto Shutdown Plus" feature. It differs from our existing Auto On-line® by relying on signal transitions rather than voltage levels to trigger shutdown and wakeup.

Auto On-Line® Plus automatically puts the device into a standby mode where it draws only 1µA typical. When the device detects activity on either the receiver or driver inputs it will automatically awake and activate to allow serial communication. Both the wakeup and shutdown happen automatically, without any user intervention, special drivers, or software modifications.

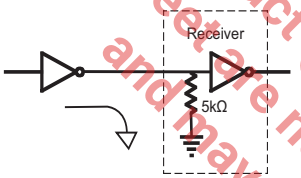

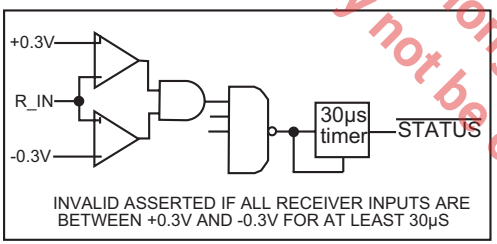

Figure 3a. STATUS Functional Diagram STATUS low

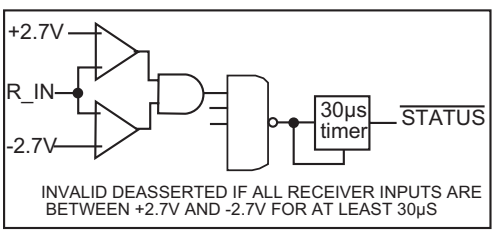

Figure 3b. STATUS Functional Diagram, STATUS high.

Wakeup and shutdown can be externally controlled by the ONLINE and SHUTDOWN pins. When ONLINE is driven to logic LOW, the Auto On-line® Plus function is active. Driving SHUTDOWN to logic LOW forces the device into shutdown state regardless of input activity or the status of the ONLINE pin.

The STATUS output determines whether a valid RS-232 signal voltage is present on the inputs. The STATUS pin goes to a logic LOW when the receiver input signal levels collapse near reference ground. This may occur when the RS-232 cable is disconnected or the RS-232 drivers of the connected peripheral are turned off.

STATUS may be used to indicate DTR or a Ring Indicator signal or to determine whether a live RS232 driver or cable is connected. By connecting the STATUS output to ONLINE input, the SP3224E-SP3227E will shut down when no valid signal level and no input transitions are detected, and wake up on a valid signal level or signal edge. If it detects no signal transitions with the past 30 seconds, the device will go into low power mode. By connecting the STATUS output to both the ONLINE input and SHUTDOWN input pins, the device enters into shutdown when not receiving a valid RS-232 signal voltage input.

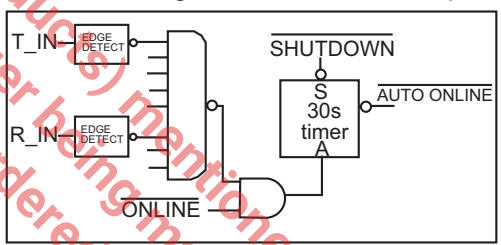

Figure 3c. Auto On-line® Plus Logic

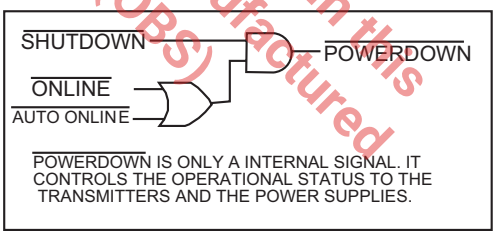

Figure 3d. Powerdown Logic

When the SP3224E-SP3227E devices are

The product (or products) mentioned in this data sheet are no longer being manufactured and may not be ordered (OBS)

shut down, the charge pumps are turned off. V+ charge pump output decays to VCC,the V- output decays to GND. The decay time will depend on the size of capacitors used for the charge pump. Once in shutdown, the time required to exit the shutdown state and have valid V+ and V- levels is typically 50µs. When the SP3224E-SP3227E drivers and internal charge pump are disabled, the supply current is reduced to 1µA.

The product(s) mentioned in this data sheet are no longer being manufactured and may not be ordered (OBS)

Auto On-Line (existing)	Device enters low-power mode if receiver inputs see less than valid +/- 3V.
	$\overline{\text{STATUS}}$ (or $\overline{\text{INVALID}}$) signal output indicates if valid signal voltage is at receivers.
Auto On-Line Plus (new)	Device enters low-power mode if driver inputs or receiver inputs see no transitions for 30 seconds. Return to full power mode upon any transition on any driver input or receiver input
	Shutdown occurs even if data cable is connected to an active driver, as long as all inputs remain unchanged
	$\overline{\text{STATUS}}$ (or $\overline{\text{INVALID}}$) signal functions as before. Indicates if valid signal voltage is present. But has no effect on shutdown
	For SP3224E the $\overline{\text{EN}}$ input is replaced with a READY output. READY drives high when charge pump achieves greater than -4V Vss (V-). Indicates "ready to transmit."

Comparison of Auto On-line® Features

Operating Mode	$\overline{\text{ONLINE}}$	$\overline{\text{SHDN}}$	$\lvert R_{IN}\rvert$ > ±2.7V	Idle Inputs (R_{XIN} & T_{XIN})	T_{XOUT}	R_{XOUT}
Forced Shutdown	X	0	X	X	Hi-Z	Active
Forced On-Line	1	1	X	X	Active	Active
Auto On-Line Plus (Wake when active)	0	1	X	Active	Active	Active
Auto On Line Plus (Off-Line when idle)	0	1	X	Idle > 30s	Hi-Z	Active
Auto On-Line Plus (Wake on cable)	$\overline{\text{STATUS}}$	1	Yes	X	Active	Active
Auto On-Line Plus (Wake when active)	$\overline{\text{STATUS}}$	1	No	Active	Active	Active
Auto On-Line Plus (Off-Line when idle)	$\overline{\text{STATUS}}$	1	No	Idle > 30s	Hi-Z	Active
Auto On-Line (Wake on cable)	$\overline{\text{STATUS}}$	$\overline{\text{STATUS}}$	Yes	X	Active	Active
Auto On-Line (Auto Shutoff)	$\overline{\text{STATUS}}$	$\overline{\text{STATUS}}$	No	X	Hi-Z	Active

Auto On-line® Plus Truth Table

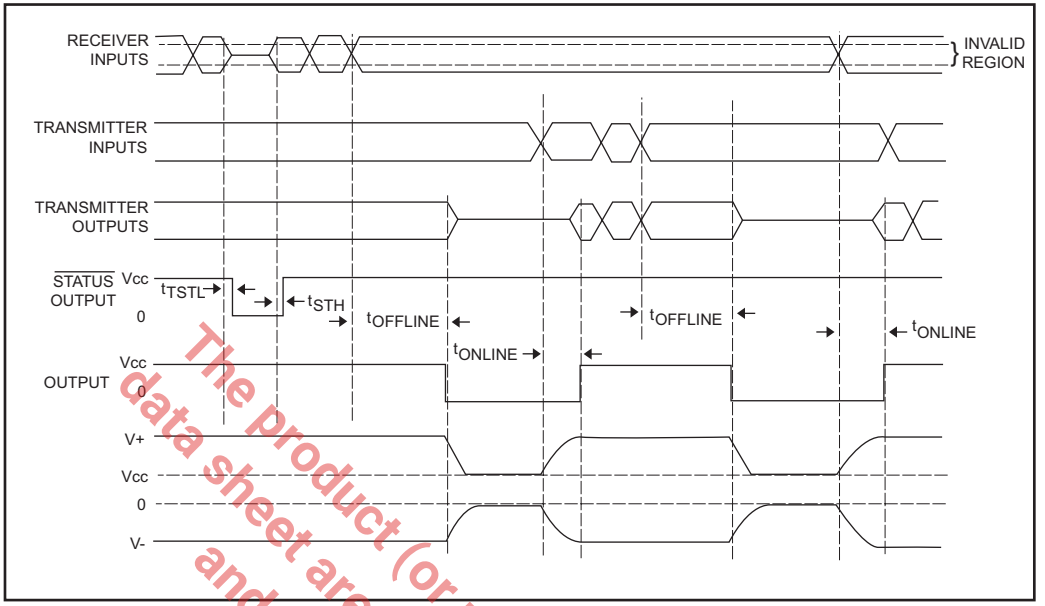

Auto On-Line® Plus Timing Diagram
t_{STL} (=30µs typ.)
t_{STH} (=0.4µs typ.)
$t_{OFFLINE}$ (=30s typ.)
t_{ONLINE} (=100µs typ.)

The product (or products) mentioned in this data sheet are no longer being manufactured and may not be ordered (OBS)

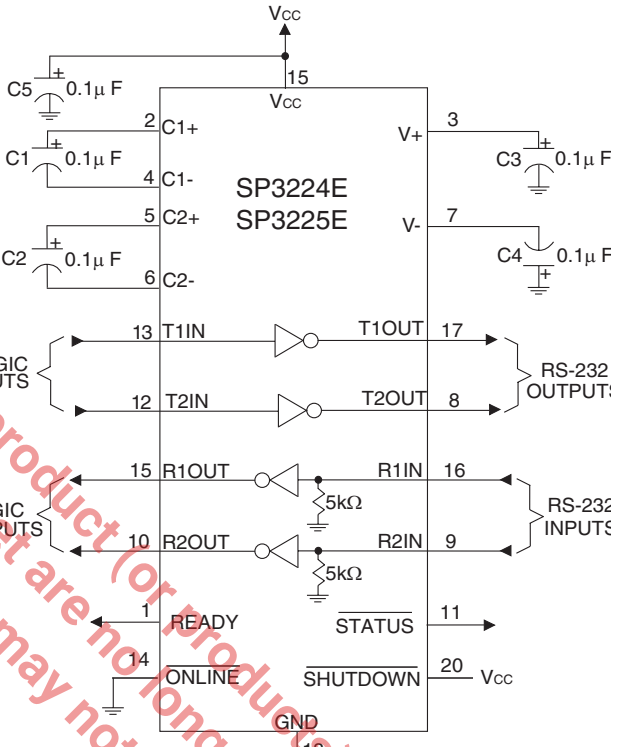

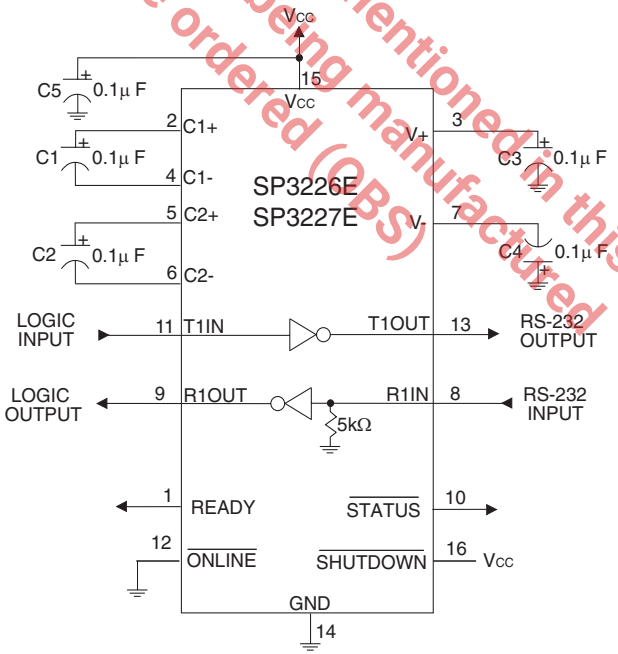

The product (or products) mentioned in this data sheet are no longer being manufactured and may not be ordered (OBS)

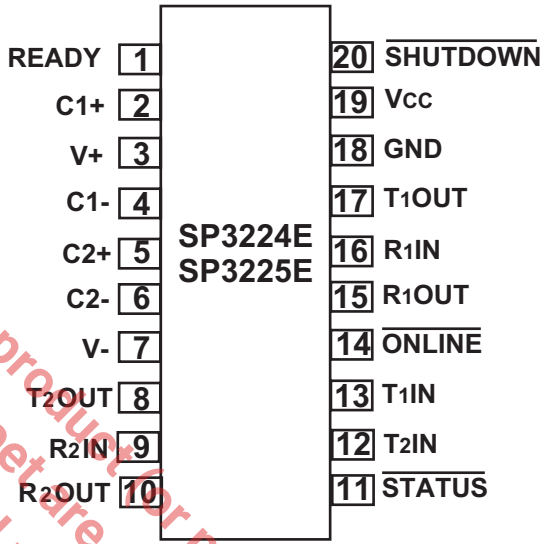

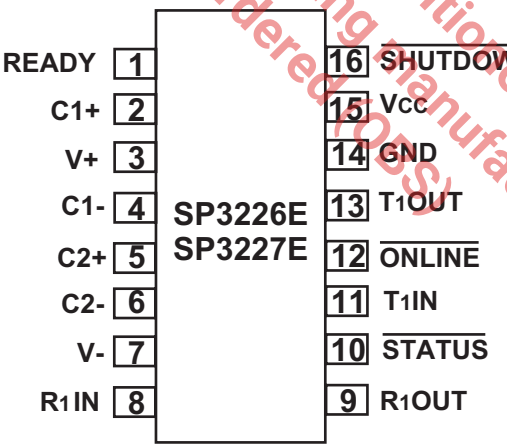

The product (or products) mentioned in this data sheet are no longer being manufactured and may not be ordered (OBS)

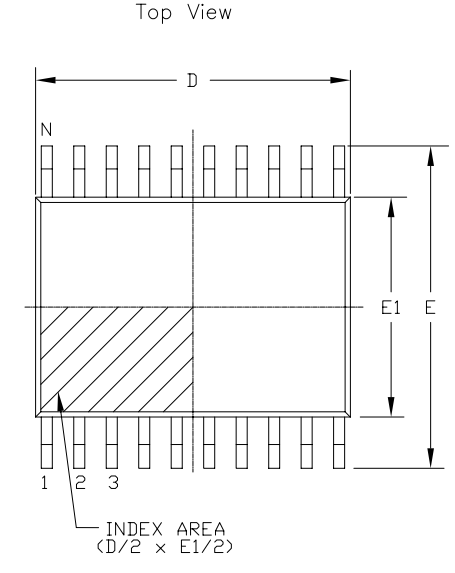

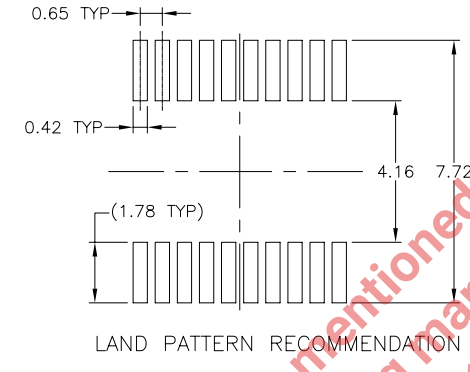

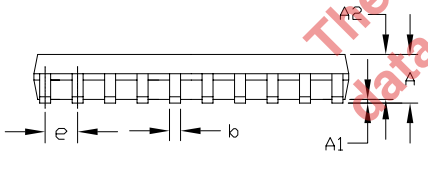

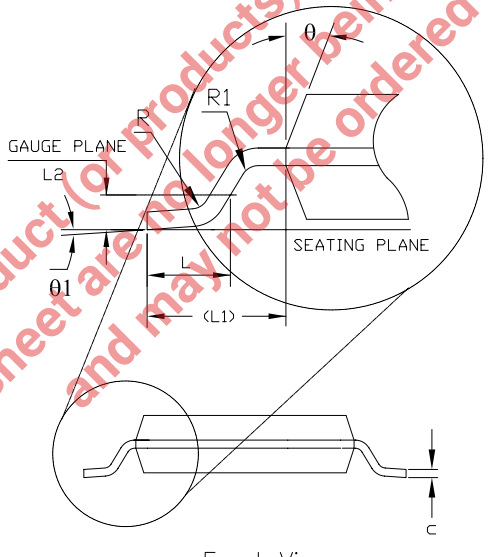

REVISION HISTORY			
REV.	DISCRIPTION	DATE	APP'D
A	DRAWING ORIGINATION	04/19/06	JL
B	ADD LAND PATTERN RECOMMENDATION	10/27/06	JL
C	CHANGE DRAWING LOGO AND COMPANY NAME	11/21/07	JL

20 Pin TSSOP JEDEC MO-153 Variation AC						
SYMBOLS	DIMENSIONS IN MM (Control Unit)			DIMENSIONS IN INCH (Reference Unit)		
	MIN	NOM	MAX	MIN	NOM	MAX
A	—	—	1.20	—	—	0.047
A1	0.05	—	0.15	0.002	—	0.006
A2	0.80	1.00	1.05	0.031	0.039	0.041
b	0.19	—	0.30	0.007	—	0.012
c	0.09	—	0.20	0.004	—	0.008
E	6.40 BSC			0.252 BSC		
E1	4.30	4.40	4.50	0.169	0.173	0.177
e	0.65 BSC			0.026 BSC		
L	0.45	0.60	0.75	0.018	0.024	0.030
L1	1.00 REF			0.039 REF		
L2	0.25 BSC			0.010 BSC		
R	0.09	—	—	0.035	—	—
R1	0.09	—	—	0.035	—	—
θ	12° REF			12° REF		
θ1	0°	—	8°	0°	—	8°
D	6.40	6.50	6.60	0.252	0.256	0.260
N	20			20		

The product (or products) mentioned in this data sheet are no longer being manufactured and may not be ordered (OBS).

EXAR Powering Connectivity		EXAR CORPORATION	
		20 PIN TSSOP PACKAGE OUTLINE	
Packaging Approval:		Drawing No:	20-PIN TSSOP
By: JL	Date: 11/21/07	Revision: C	Sheet: 1 OF 1

REVISION HISTORY			
REV.	DISCRIPTION	DATE	APP'D
A	DRAWING ORIGINATION	04/24/06	JL
B	CHANGE DRAWING LOGO AND COMPANY NAME	11/21/07	JL

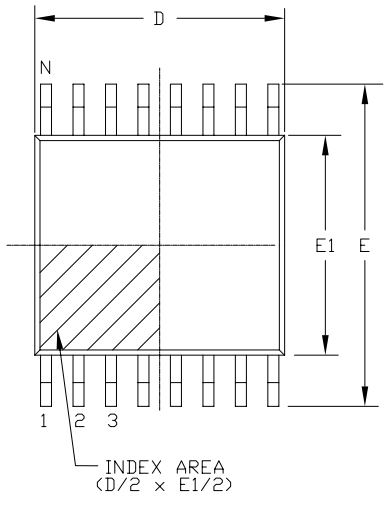

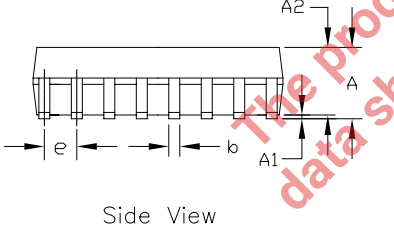

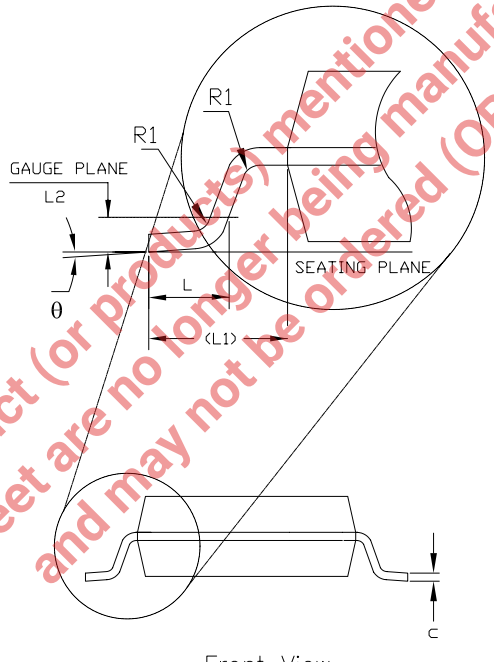

16 Pin SSOP JEDEC MO-150 Variation AC						
SYMBOLS	DIMENSIONS IN MM (Control Unit)			DIMENSIONS IN INCH (Reference Unit)		
	MIN	NOM	MAX	MIN	NOM	MAX
A	—	—	2.00	—	—	0.079
A1	0.05	—	—	0.002	—	—
A2	1.65	1.75	1.85	0.065	0.069	0.073
b	0.22	—	0.38	0.009	—	0.015
c	0.09	—	0.25	0.004	—	0.010
E	7.40	7.80	8.20	0.291	0.307	0.323
E1	5.00	5.30	5.60	0.197	0.209	0.220
e	0.65 BSC			0.026 BSC		
L	0.55	0.75	0.95	0.022	0.030	0.037
L1	1.25 REF			0.049 REF		
L2	0.25 BSC			0.010 BSC		
R1	0.09	—	—	0.004	—	—
θ	0°	4°	8°	0°	4°	8°
D	5.90	6.20	6.50	0.232	0.244	0.256
N	16			16		

The product (or products) mentioned in this data sheet are no longer being manufactured and may not be ordered (OBS).

EXAR Powering Connectivity	EXAR CORPORATION		
	16 PIN SSOP PACKAGE OUTLINE		
Packaging Approval:		Drawing No:	16-PIN SSOP
By: JL	Date: 11/21/07	Revision: B	Sheet: 1 OF 1

REVISION HISTORY			
REV.	DISCRIPTION	DATE	APP'D
A	DRAWING ORIGINATION	04/19/06	JL
B	ADD LAND PATTERN RECOMMENDATION	05/22/07	JL
C	CHANGE DRAWING LOGO AND COMPANY NAME	11/21/07	JL

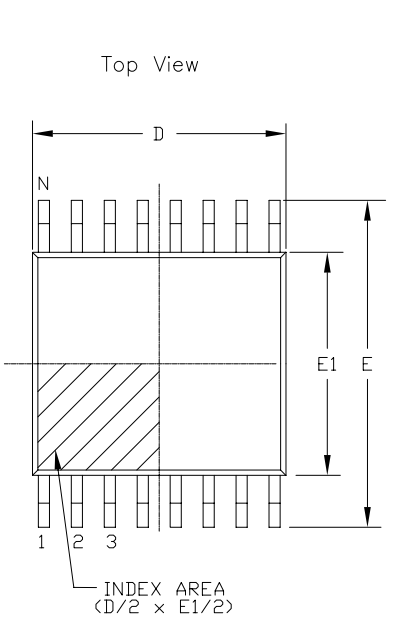

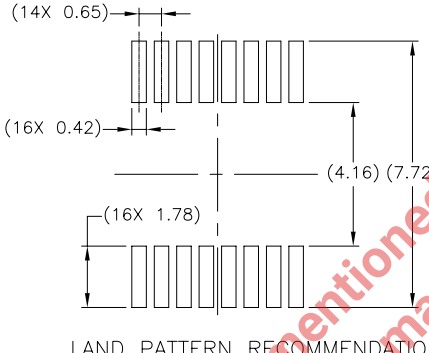

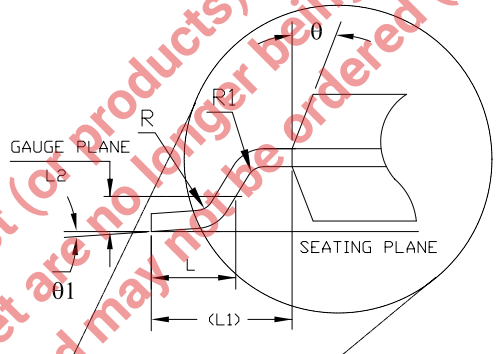

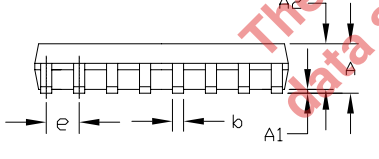

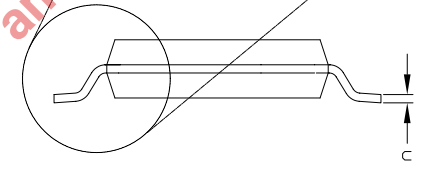

16 Pin TSSOP JEDEC MO-153 Variation AB						
SYMBOLS	DIMENSIONS IN MM (Control Unit)			DIMENSIONS IN INCH (Reference Unit)		
	MIN	NOM	MAX	MIN	NOM	MAX
A	—	—	1.20	—	—	0.047
A1	0.05	—	0.15	0.002	—	0.006
A2	0.80	1.00	1.05	0.031	0.039	0.041
b	0.19	—	0.30	0.007	—	0.012
c	0.09	—	0.20	0.004	—	0.008
E	6.40 BSC			0.252 BSC		
E1	4.30	4.40	4.50	0.169	0.173	0.177
e	0.65 BSC			0.026 BSC		
L	0.45	0.60	0.75	0.018	0.024	0.030
L1	1.00 REF			0.039 REF		
L2	0.25 BSC			0.010 BSC		
R	0.09	—	—	0.035	—	—
R1	0.09	—	—	0.035	—	—
θ	12° REF			12° REF		
θ1	0°	—	8°	0°	—	8°
D	4.90	5.00	5.10	0.193	0.197	0.200
N	16			16		

The product (or products) mentioned in this data sheet are no longer being manufactured and may not be ordered (OBS)

EXAR Powering Connectivity	EXAR CORPORATION	
	16 PIN TSSOP PACKAGE OUTLINE	
Packaging Approval:	Drawing No: 16-PIN TSSOP	
By: JL Date: 11/21/07	Revision: C	Sheet: 1 OF 1

REVISION HISTORY			
REV.	DISCRIPTION	DATE	APP'D
A	DRAWING ORIGINATION	04/24/06	JL
B	ADD LAND PATTERN RECOMMENDATION	07/25/07	JL
C	CHANGE DRAWING LOGO AND COMPANY NAME	11/21/07	JL

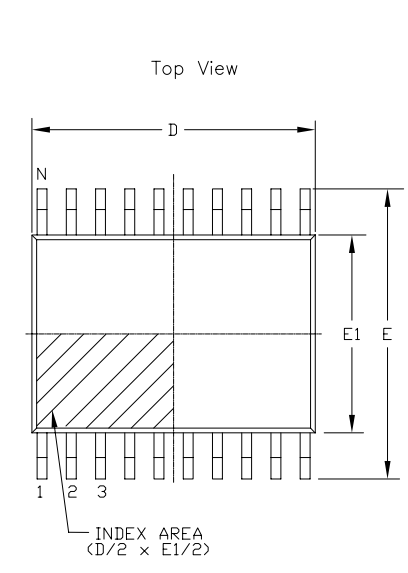

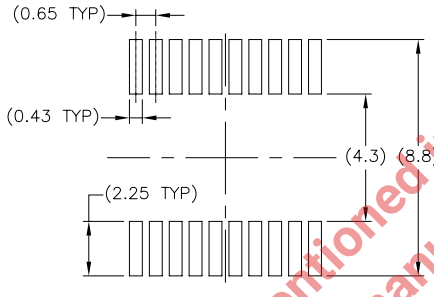

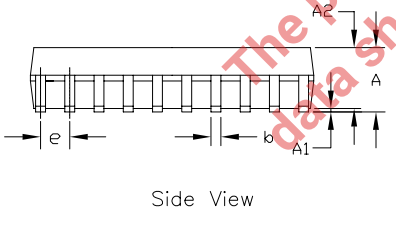

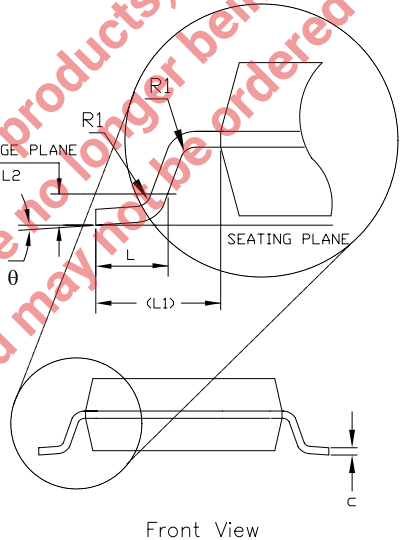

20 Pin SSOP JEDEC MO-150 Variation AE						
SYMBOLS	DIMENSIONS IN MM (Control Unit)			DIMENSIONS IN INCH (Reference Unit)		
	MIN	NOM	MAX	MIN	NOM	MAX
A	—	—	2.00	—	—	0.079
A1	0.05	—	—	0.002	—	—
A2	1.65	1.75	1.85	0.065	0.069	0.073
b	0.22	—	0.38	0.009	—	0.015
c	0.09	—	0.25	0.004	—	0.010
E	7.40	7.80	8.20	0.291	0.307	0.323
E1	5.00	5.30	5.60	0.197	0.209	0.220
e	0.65 BSC			0.026 BSC		
L	0.55	0.75	0.95	0.022	0.030	0.037
L1	1.25 REF			0.049 REF		
L2	0.25 BSC			0.010 BSC		
R1	0.09	—	—	0.004	—	—
θ	0°	4°	8°	0°	4°	8°
D	6.90	7.20	7.50	0.272	0.283	0.295
N	20			20		

The product (or products) mentioned in this data sheet are no longer being manufactured and may not be ordered (OBS)

EXAR Powering Connectivity		EXAR CORPORATION	
		20 PIN SSOP PACKAGE OUTLINE	
Packaging Approval:		Drawing No:	20-PIN SSOP
By: JL	Date: 11/21/07	Revision: C	Sheet: 1 OF 1

Part number	Temperature range	Package Type
SP3224ECA-L	From 0°C to +70°C	Lead Free 20 pin SSOP
SP3224ECY-L	From 0°C to +70°C	Lead Free 20 pin TSSOP
SP3224EEA-L	From -40°C to +85°C	Lead Free 20 pin SSOP
SP3224EEY-L	From -40°C to +85°C	Lead Free 20 pin TSSOP
SP3225ECA-L	From 0°C to +70°C	Lead Free 20 pin SSOP
SP3225ECY-L	From 0°C to +70°C	Lead Free 20 pin TSSOP
SP3225EEA-L	From -40°C to +85°C	Lead Free 20 pin SSOP
SP3225EEY-L	From -40°C to +85°C	Lead Free 20 pin TSSOP
SP3226ECA-L	From 0°C to +70°C	Lead Free 16 pin SSOP
SP3226ECY-L	From 0°C to +70°C	Lead Free 16 PIN SSOP
SP3226EEA-L	From -40°C to +85°C	Lead Free 16 pin SSOP
SP3226EEY-L	From -40°C to +85°C	Lead Free 16 PIN TSSOP
SP3227ECA-L	From 0°C to +70°C	Lead Free 16 PIN SSOP
SP3227ECY-L	From 0°C to +70°C	Lead Free 16 PIN TSSOP
SP3227EEA-L	From -40°C to +85°C	Lead Free 16 PIN SSOP
SP3227EEY-L	From -40°C to +85°C	Lead Free 16 PIN TSSOP

Available in Tape on Reel

The product (or products) mentioned in this data sheet are no longer being manufactured and may not be offered (OBS)

DATE	REVISION	DESCRIPTION
11-20-06	P	Legacy Sipex Datasheet
12-14-09	1.0.0	Update to Exar Format. Change revision to 1.0.0. Change Supply Current Active over full Vcc range maximum from 2.0mA to 3.0mA. Change Supply Current Active at Vcc = 3.3V maximum from 1.0mA to 2.0mA. Change RX input voltage ABS Maximum Rating from +/-18V to +/-16V.
08-17-11	1.0.1	Correct type error on front page Features list.

Notice

EXAR Corporation reserves the right to make changes to any products contained in this publication in order to improve design, performance or reliability. EXAR Corporation assumes no representation that the circuits are free of patent infringement. Charts and schedules contained herein are only for illustration purposes and may vary depending upon a user's specific application. While the information in this publication has been carefully checked; no responsibility, however, is assumed for inaccuracies.

EXAR Corporation does not recommend the use of any of its products in life support applications where the failure or malfunction of the product can reasonably be expected to cause failure of the life support system or to significantly affect its safety or effectiveness. Products are not authorized for use in such applications unless EXAR Corporation receives, in writting, assurances to its satisfaction that: (a) the risk of injury or damage has been minimized ; (b) the user assumes all such risks; (c) potential liability of EXAR Corporation is adequately protected under the circumstances.

Copyright 2011 EXAR Corporation

Datasheet August 2011

Send your serial transceiver technical inquiry with technical details to: serialtechsupport@exar.com

Reproduction, in part or whole, without the prior written consent of EXAR Corporation is prohibited.