GENERAL DESCRIPTION

The XR16M580[1] (M580) is an enhanced Universal Asynchronous Receiver and Transmitter (UART) with 16 bytes of transmit and receive FIFOs, selectable transmit and receive FIFO trigger levels, automatic hardware and software flow control, and data rates of up to 16 Mbps at 3.3V, 12.5 Mbps at 2.5V and 7.5 Mbps at 1.8V with 4X data sampling rate.

The Auto RS-485 Half-Duplex Direction control feature simplifies both the hardware and software for half-duplex RS-485 applications. In addition, the Multidrop mode with Auto Address detection increases the performance by simplifying the software routines.

The Independent TX/RX Baud Rate Generator feature allows the transmitter and receiver to operate at different baud rates. Power consumption of the M580 can be minimized by enabling the sleep mode and PowerSave mode.

The M580 has a 16550 compatible register set that provide users with operating status and control, receiver error indications, and modem serial interface controls. An internal loopback capability allows onboard diagnostics. The M580 is available in 32-pin QFN, 48-pin TQFP and 25-pin BGA packages. All three packages offer both the 16 mode (Intel bus) interface and the 68 mode (Motorola bus) interface which allows easy integration with Motorola processors.

NOTE: *1 Covered by U.S. Patent #5,649,122.*

FEATURES

- Pin-to-pin compatible with XR16L580 in 32-QFN and 48-TQFP packages
- Intel or Motorola Bus Interface select
- 16Mbps maximum data rate
- Selectable TX/RX trigger levels
- TX/RX FIFO Level Counters
- Independent TX/RX Baud Rate Generator
- Fractional Baud Rate Generator
- Auto RTS/CTS Hardware Flow Control
- Auto XON/XOFF Software Flow Control
- Auto RS-485 Half-Duplex Direction Control
- Multidrop mode w/ Auto Address Detect
- Sleep Mode with Automatic Wake-up
- PowerSave mode
- Infrared (IrDA 1.0 and 1.1) mode
- 1.62V to 3.63V supply operation
- Crystal oscillator or external clock input

APPLICATIONS

- Personal Digital Assistants (PDA)
- Cellular Phones/Data Devices
- Battery-Operated Devices
- Global Positioning System (GPS)
- Bluetooth

The product (or products) mentioned in this data sheet are no longer being manufactured and may not be ordered (OBS)

FIGURE 1. XR16M580 BLOCK DIAGRAM

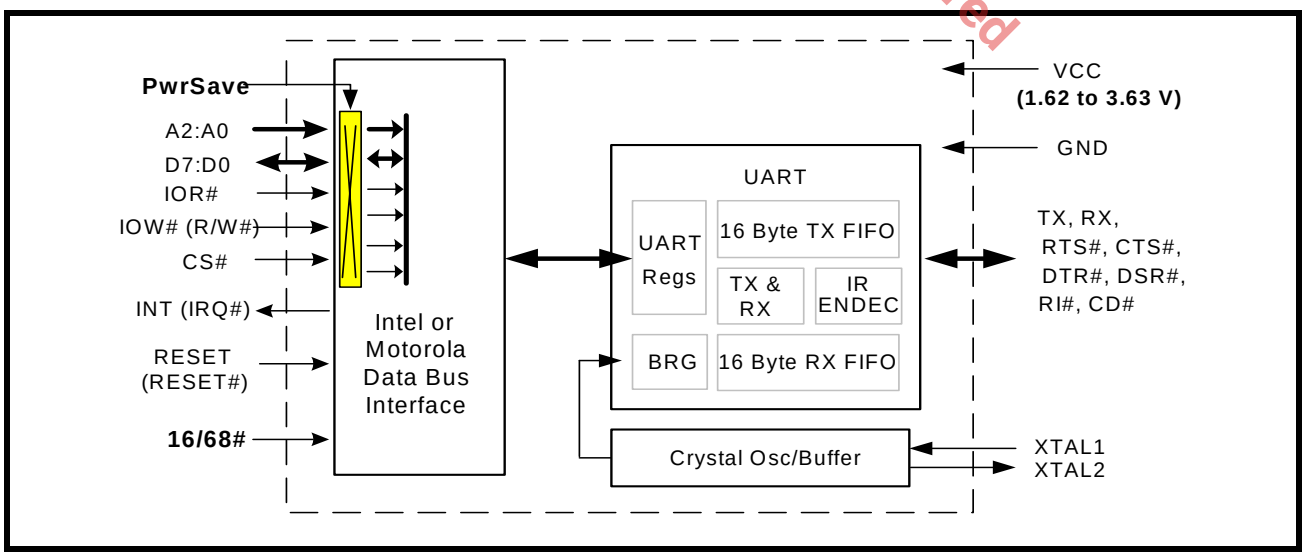

FIGURE 2. PIN OUT ASSIGNMENT FOR 32-PIN QFN AND 48-PIN TQFP PACKAGES IN 16 AND 68 MODE

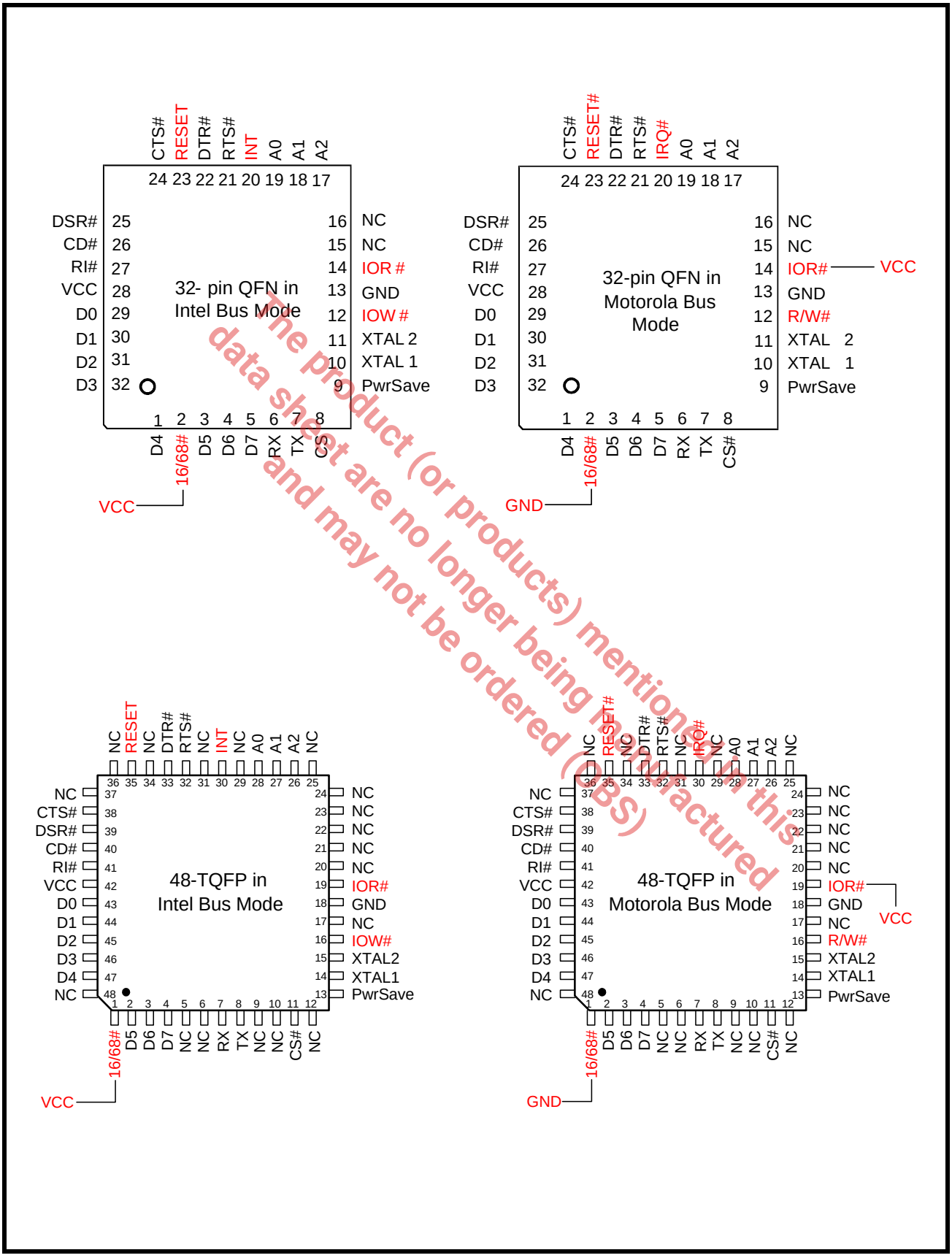

The product (or products) mentioned in this data sheet are no longer being manufactured and may not be ordered (OBS)

FIGURE 3. PIN OUT ASSIGNMENT FOR 25-PIN BGA PACKAGE

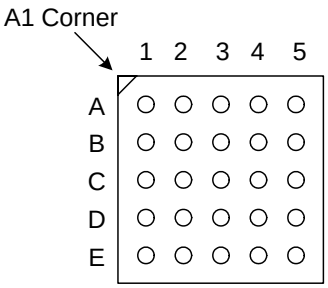

Transparent Top View

CTS#	RESET	INT	A1	A2
VCC	16/68#	RTS#	A0	IOR#
D0	D6	D7	PwrSave	IOW#
D3	D1	TX	CS#	XTAL1
D4	D2	D5	RX	GND

The product (or products) mentioned in this data sheet are no longer being manufactured and may not be ordered (OBS)

ORDERING INFORMATION

PART NUMBER	PACKAGE	OPERATING TEMPERATURE RANGE	DEVICE STATUS
XR16M580IL32	32-PinQFN	-40°C to +85°C	Active
XR16M580IM48	48-Lead TQFP	-40°C to +85°C	Active
XR16M580IB25	25-Pin BGA	-40°C to +85°C	Active

PIN DESCRIPTIONS

Pin Description

NAME	32-QFN PIN#	48-TQFP PIN#	25-BGA PIN#	TYPE	DESCRIPTION
DATA BUS INTERFACE					
A2 A1 A0	17 18 19	26 27 28	A5 A4 B4	I	Address lines [2:0]. These 3 address lines select the internal registers in UART channel during a data bus transaction.
D7 D6 D5 D4 D3 D2 D1 D0	5 4 3 1 32 31 30 29	4 3 2 47 46 45 44 43	C3 C2 E3 E1 D1 E2 D2 C1	I/O	Data bus lines [7:0] (bidirectional).
IOR#	14	19	B5	I	When 16/68# pin is at logic 1, the Intel bus interface is selected and this input becomes read strobe (active low). The falling edge instigates an internal read cycle and retrieves the data byte from an internal register pointed by the address lines [A2:A0], puts the data byte on the data bus to allow the host processor to read it on the rising edge. When 16/68# pin is at logic 0, the Motorola bus interface is selected and this input should be connected to VCC.
IOW# (R/W#)	12	16	C5	I	When 16/68# pin is at logic 1, it selects Intel bus interface and this input becomes write strobe (active low). The falling edge instigates the internal write cycle and the rising edge transfers the data byte on the data bus to an internal register pointed by the address lines. When 16/68# pin is at logic 0, the Motorola bus interface is selected and this input becomes read (logic 1) and write (logic 0) signal.
CS#	8	11	D4	I	This input is chip select (active low) to enable the device.
INT (IRQ#)	20	30	A3	O (OD)	When 16/68# pin is at logic 1 for Intel bus interface, this output become the active high device interrupt output. The output state is defined by the user through the software setting of MCR[3]. INT is set to the active mode when MCR[3] is set to a logic 1. INT is set to the three state mode when MCR[3] is set to a logic 0. See MCR[3]. When 16/68# pin is at logic 0 for Motorola bus interface, this output becomes the active low device interrupt output (open drain). An external pull-up resistor is required for proper operation.
MODEM OR SERIAL I/O INTERFACE					
TX	7	8	D3	O	UART Transmit Data or infrared encoder data. Standard transmit and receive interface is enabled when MCR[6] = 0. In this mode, the TX signal will be a logic 1 during reset or idle (no data). Infrared IrDA transmit and receive interface is enabled when MCR[6] = 1. In the Infrared mode, the inactive state (no data) for the Infrared encoder/decoder interface is a logic 0. If it is not used, leave it unconnected.

The product (or products) mentioned in this data sheet are no longer being manufactured and may not be ordered (OBS).

Pin Description

NAME	32-QFN PIN#	48-TQFP PIN#	25-BGA PIN#	TYPE	DESCRIPTION
RX	6	7	E4	I	UART Receive Data or infrared receive data. Normal receive data input must idle at logic 1 condition. The infrared receiver idles at logic 0. This input should be connected to VCC when not used.
RTS#	21	32	B3	O	UART Request-to-Send (active low) or general purpose output. This output must be asserted prior to using auto RTS flow control, see EFR[6], MCR[1] and IER[6].
CTS#	24	38	A1	I	UART Clear-to-Send (active low) or general purpose input. It can be used for auto CTS flow control, see EFR[7], MSR[4] and IER[7]. This input should be connected to VCC when not used.
DTR#	22	33	-	O	UART Data-Terminal-Ready (active low) or general purpose output.
DSR#	25	39	-	I	UART Data-Set-Ready (active low) or general purpose input. This input should be connected to VCC when not used.
CD#	26	40	-	I	UART Carrier-Detect (active low) or general purpose input. This input should be connected to VCC when not used.
RI#	27	41	-	I	UART Ring-Indicator (active low) or general purpose input. This input should be connected to VCC when not used.
ANCILLARY SIGNALS					
XTAL1	10	14	D5	I	Crystal or external clock input.
XTAL2	11	15	-	O	Crystal or buffered clock output.
PwrSave	9	13	C4	I	Power-Save (active high). This feature isolates the M580's data bus interface from the host preventing other bus activities that cause higher power drain during sleep mode. See Sleep Mode with Auto Wake-up and Power-Save Feature section for details. This pin does not have an internal pull-down resistor. This input should be connected to GND when not used.
16/68#	2	1	B2	I	Intel or Motorola Bus Select. When 16/68# pin is at logic 1, 16 or Intel Mode, the device will operate in the Intel bus type of interface. When 16/68# pin is at logic 0, 68 or Motorola mode, the device will operate in the Motorola bus type of interface. This pin does not have an internal pull-up or pull-down resistor.
RESET (RESET#)	23	35	A2	I	When 16/68# pin is at logic 1 for Intel bus interface, this input becomes RESET (active high). When 16/68# pin is at logic 0 for Motorola bus interface, this input becomes RESET# (active low). A 40 ns minimum active pulse on this pin will reset the internal registers and all outputs of the UART. The UART transmitter output will be held at logic 1, the receiver input will be ignored and outputs are reset during reset period (see UART Reset Conditions).
VCC	28	42	B1	Pwr	1.62V to 3.63V power supply.
GND	13	18	E5	Pwr	Power supply common, ground.
GND	Center Pad	-	-	Pwr	The center pad on the backside of the QFN package is metallic and should be connected to GND on the PCB. The thermal pad size on the PCB should be the approximate size of this center pad and should be solder mask defined. The solder mask opening should be at least 0.0025" inwards from the edge of the PCB thermal pad.

The product (or products) mentioned in this data sheet are no longer being manufactured and may not be ordered (OBS)

Pin Description

NAME	32-QFN PIN#	48-TQFP PIN#	25-BGA PIN#	TYPE	DESCRIPTION
NC	15, 16	5, 6, 9, 10, 12, 17, 20-25, 29, 31, 34, 36, 37, 48	-	-	No Connects.

Pin type: I=Input, O=Output, I/O= Input/output, OD=Output Open Drain.

1.0 PRODUCT DESCRIPTION

The XR16M580 (M580) is a high performance single channel UART. The configuration registers set is 16550 UART compatible for control, status and data transfer. Additionally, the M580 channel has 16 bytes of transmit and receive FIFOs, Automatic RTS/CTS Hardware Flow Control, Automatic Xon/Xoff and Special Character Software Flow Control, infrared encoder and decoder (IrDA ver 1.0 and 1.1), programmable fractional baud rate generator with a prescaler of divide by 1 or 4, and data rate up to 16 Mbps. The XR16M580 can operate from 1.62 to 3.63 volts. The M580 is fabricated with an advanced CMOS process.

Data Rate

The M580 is capable of operation up to 16 Mbps at 3.3V with 4X internal sampling clock rate. The device can operate at 3.3V with a 24 MHz crystal on pins XTAL1 and XTAL2, or external clock source of 32 MHz on XTAL1 pin. With a typical crystal of 14.7456 MHz and through a software option, the user can set the prescaler bit and sampling rate for data rates of up to 3.68 Mbps.

Enhanced Features

The rich feature set of the M580 is available through the internal registers. Automatic hardware/software flow control, selectable transmit and receive FIFO trigger levels, selectable baud rates, infrared encoder/decoder, modem interface controls, and a sleep mode are all standard features. MCR bit-5 provides a facility for turning off (Xon) software flow control with any incoming (RX) character. The M580 includes new features such as 9-bit (Multidrop) mode, auto RS-485 half-duplex direction control, different baud rate for TX and RX, fast IR mode and fractional baud rate generator.

The Product (or Products) mentioned in this data sheet are no longer being manufactured and may not be ordered (OBS)

2.0 FUNCTIONAL DESCRIPTIONS

2.1 CPU Interface

The CPU interface is 8 data bits wide with 3 address lines and control signals to execute data bus read and write transactions. The M580 data interface supports the Intel and motorola compatible types of CPUs. No clock (oscillator nor external clock) is required for a data bus transaction. Each bus cycle is asynchronous using CS#, IOR# and IOW# or R/W# inputs. A typical data bus interconnection for Intel and Motorola mode is shown in Figure 4.

FIGURE 4. XR16M580 TYPICAL INTEL/MOTOROLA DATA BUS INTERCONNECTIONS

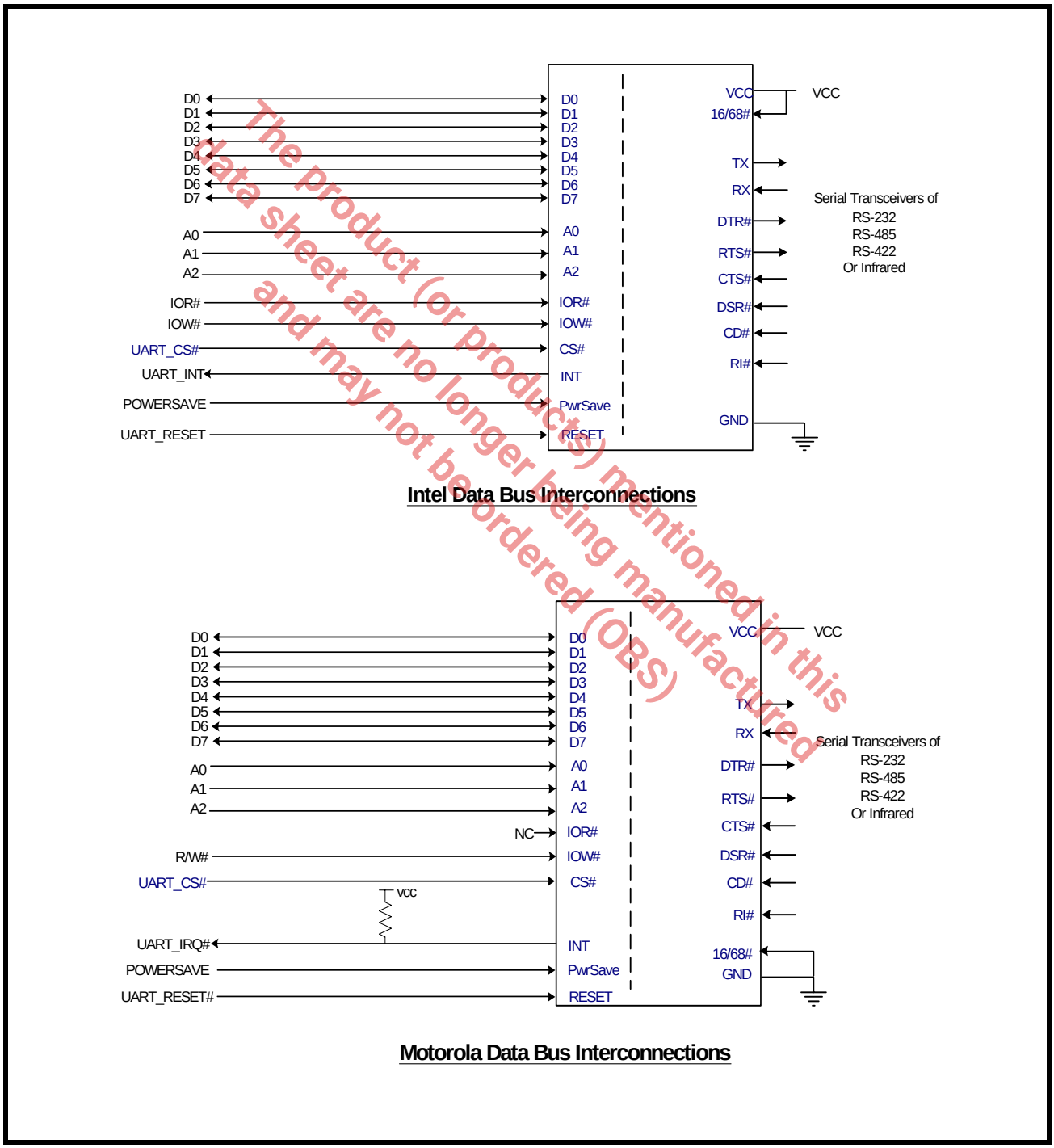

The product (or products) mentioned in this Data sheet are no longer being manufactured and may not be ordered (OBS)

2.2 Serial Interface

The M580 is typically used with RS-232, RS-485 and IR transceivers. The following figure shows typical connections from the UART to the different transceivers. For more information on RS-232 and RS-485/422 transceivers, go to www.exar.com or send an e-mail to uarttechsupport@exar.com.

FIGURE 5. XR16M580 TYPICAL SERIAL INTERFACE CONNECTIONS

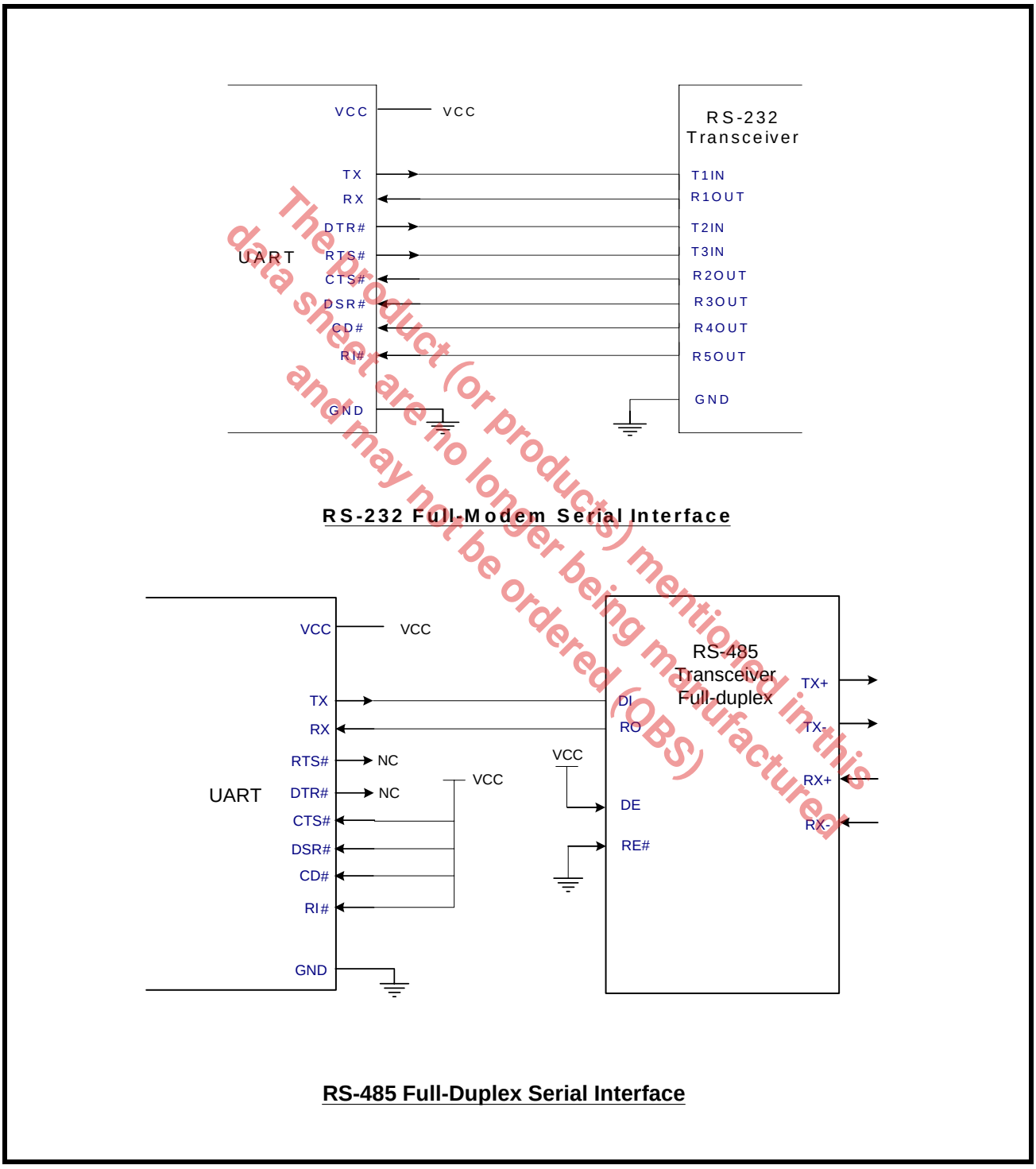

The product (or products) mentioned in this data sheet are no longer being manufactured and may not be ordered (OBS)

FIGURE 6. XR16M580 TYPICAL SERIAL INTERFACE CONNECTIONS

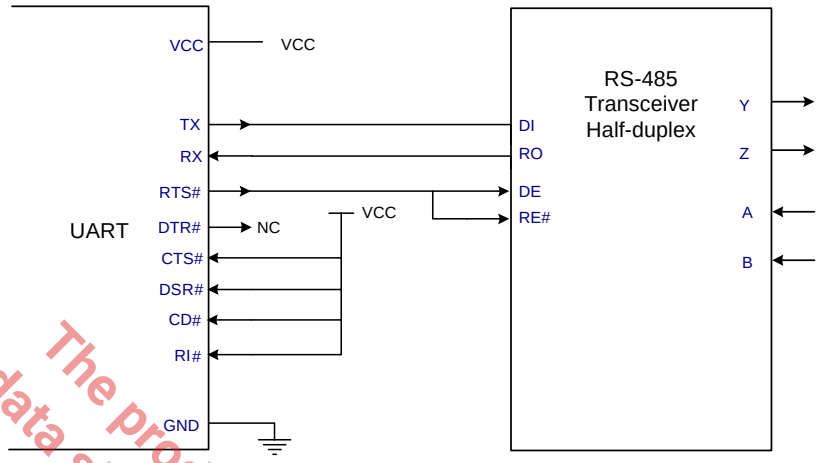

RS-485 Half-Duplex Serial Interface

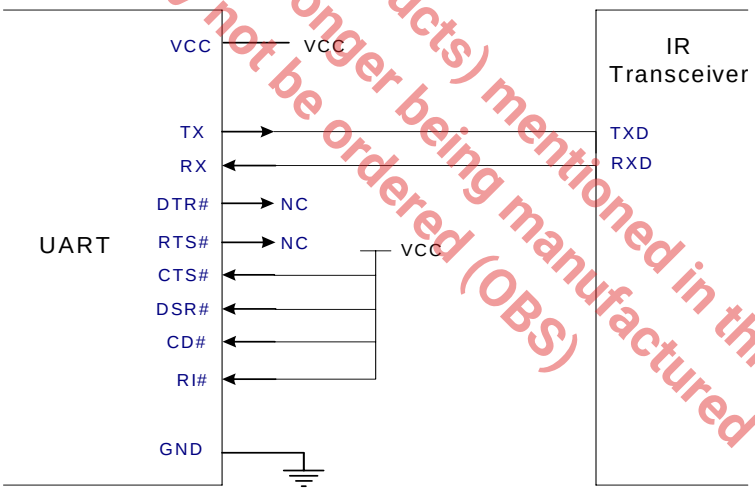

Infrared Connection

The product (or products) mentioned in this data sheet are no longer being manufactured and may not be ordered (OBS)

2.3 Device Reset

The RESET input resets the internal registers and the serial interface outputs to their default state (see Table 16). An active high pulse of longer than 40 ns duration will be required to activate the reset function in the device. Following a power-on reset or an external reset, the M580 is software compatible with previous generation of UARTs, XR16L580 and ST16C550.

2.4 Internal Registers

The M580 has a set of 16550 compatible registers for controlling, monitoring and data loading and unloading. These registers function as data holding registers (THR/RHR), interrupt status and control registers (ISR/IER), a FIFO control register (FCR), receive line status and control registers (LSR/LCR), modem status and control registers (MSR/MCR), programmable data rate (clock) divisor registers (DLL/DLM/DLD), and a user accessible scratchpad register (SPR).

Beyond the general 16C550 features and capabilities, the M580 offers enhanced feature registers (EFR, Xon1/ Xoff 1, Xon2/Xoff 2, DLD, FCTR, EMSR and FC) that provide automatic RTS and CTS hardware flow control, automatic Xon/Xoff software flow control, 9-bit (Multidrop) mode, auto RS-485 half duplex control, different baud rate for TX and RX and fractional baud rate generator. All the register functions are discussed in full detail later in **"Section 3.0, UART INTERNAL REGISTERS" on page 24**.

2.5 INT Ouput

The interrupt outputs change according to the operating mode and enhanced features setup. **Table 1 and 2** summarize the operating behavior for the transmitter and receiver. Also see **Figure 22** through **25**.

NOTE: *The IRQ# pin requires a pull-up resistor for proper operation.*

The Product (or products) mentioned in this data sheet are no longer being manufactured and may not be ordered (OBS)

TABLE 1: INT PIN OPERATION FOR TRANSMITTER

	FCR BIT-0 = 0 (FIFO DISABLED)	FCR BIT-0 = 1 (FIFO ENABLED)
INT Pin (16/68# = 1)	LOW = One byte in THR HIGH = THR empty	LOW = FIFO above trigger level HIGH = FIFO below trigger level or FIFO empty
IRQ# Pin (16/68# = 0)	HIGH = One byte in THR LOW = THR empty	HIGH = FIFO above trigger level LOW = FIFO below trigger level or FIFO empty

TABLE 2: INT PIN OPERATION FOR RECEIVER

	FCR BIT-0 = 0 (FIFO DISABLED)	FCR BIT-0 = 1 (FIFO ENABLED)
INT Pin (16/68# = 1)	HIGH = One byte in RHR LOW = RHR empty	LOW = FIFO below trigger level HIGH = FIFO above trigger level or RX Data Timeout
IRQ# Pin (16/68# = 0)	LOW = One byte in RHR HIGH = RHR empty	HIGH = FIFO below trigger level LOW = FIFO above trigger level or RX Data Timeout

2.6 Crystal Oscillator or External Clock Input

The M580 includes an on-chip oscillator to produce a clock for the baud rate generators in the device when a crystal is connected between XTAL1 and XTAL2 as show below. The CPU data bus does not require this clock for bus operation. The crystal oscillator provides a system clock to the Baud Rate Generators (BRGs) in the UART. XTAL1 is the input to the oscillator or external clock buffer input with XTAL2 pin being the output. For programming details, see **"Section 2.7, Programmable Baud Rate Generator with Fractional Divisor" on page 12**.

FIGURE 7. TYPICAL CRYSTAL CONNECTIONS

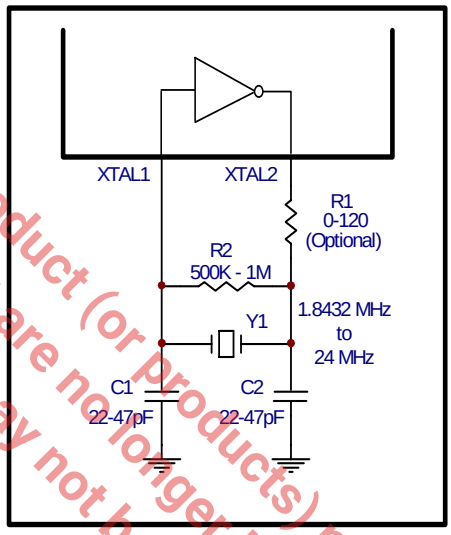

The product (or products) mentioned in this data sheet are no longer being manufactured and may not be ordered (OBS)

The on-chip oscillator is designed to use an industry standard microprocessor crystal (parallel resonant, fundamental frequency with 10-22 pF capacitance load, ESR of 20-120 ohms and 100ppm frequency tolerance) connected externally between the XTAL1 and XTAL2 pins. Typical oscillator connections are shown in **Figure 7**. Alternatively, an external clock can be connected to the XTAL1 pin to clock the internal baud rate generator for standard or custom rates. The BGA package has XTAL1 only, the external clock is required. For further reading on oscillator circuit, see application note DAN108 on EXAR's web site.

2.7 Programmable Baud Rate Generator with Fractional Divisor

The M580 has independent Baud Rate Generators (BRGs) with prescalers for the transmitter and receiver. The prescaler is controlled by a software bit in the MCR register. The MCR register bit-7 sets the prescaler to divide the input crystal or external clock by 1 or 4. The output of the prescaler clocks to the BRG. The BRG further divides this clock by a programmable divisor between 1 and (2^{16} - 0.0625) in increments of 0.0625 (1/16) to obtain a 16X or 8X or 4X sampling clock of the serial data rate. The sampling clock is used by the transmitter for data bit shifting and receiver for data sampling. For transmitter and receiver, the M580 provides respective BRG divisors. The BRG divisor (DLL, DLM, and DLD registers) defaults to the value of '1' (DLL = 0x01, DLM = 0x00 and DLD = 0x00) upon reset. Therefore, the BRG must be programmed during initialization to the operating data rate. The DLL and DLM registers provide the integer part of the divisor and the DLD registers provides the fractional part of the divisor. The four lower bits of the DLD are used to select a value from 0 (for setting 0000) to 0.9375 or 15/16 (for setting 1111). Programming the Baud Rate Generator Registers DLL, DLM and DLD provides the capability for selecting the operating data rate. **Table 3** shows the standard data rates available with a 24MHz crystal or external clock at 16X clock rate. If the pre-scaler is used (MCR bit-7 = 1), the output data rate will be 4 times less than that shown in **Table 3**. At 8X sampling rate, these data rates would double. And at 4X sampling rate, they would quadruple. Also, when using 8X sampling mode, please note that the bit-time will have a jitter (+/- 1/16) whenever the DLD is non-zero and is an odd number. When using a non-standard data rate crystal or external clock, the divisor value can be calculated with the following equation(s):

Required Divisor (decimal)=(XTAL1 clock frequency / prescaler) /(serial data rate x 16), with 16X mode, **DLD[5:4]='00'**
Required Divisor (decimal)= (XTAL1 clock frequency / prescaler / (serial data rate x 8), with 8X mode, **DLD[5:4] = '01'**
Required Divisor (decimal)= (XTAL1 clock frequency / prescaler / (serial data rate x 4), with 4X mode, **DLD[5:4] = '10'**

The closest divisor that is obtainable in the M580 can be calculated using the following formula:

ROUND((Required Divisor - TRUNC(Required Divisor))*16)/16 + TRUNC(Required Divisor), where

DLM = TRUNC(Required Divisor) >> 8

DLL = TRUNC(Required Divisor) & 0xFF

DLD = ROUND((Required Divisor-TRUNC(Required Divisor))*16)

In the formulas above, please note that:

TRUNC (N) = Integer Part of N. For example, TRUNC (5.6) = 5.

ROUND (N) = N rounded towards the closest integer. For example, ROUND (7.3) = 7 and ROUND (9.9) = 10.

A >> B indicates right shifting the value 'A' by 'B' number of bits. For example, 0x78A3 >> 8 = 0x0078.

2.7.1 Independent TX/RX BRG

The XR16M580 has two independent sets of TX and RX baud rate generator. Please see the **Figure 8**. TX and RX can work in different baud rate by setting DLD, DLL and DLM register. For example, TX can transmit data to the remote UART at 9600 bps while RX receives data from remote UART at 921.6 Kbps. For the baud rate setting, please **See "Section 4.13, Baud Rate Generator Registers (DLL, DLM and DLD) - Read/Write" on page 38.**.

The product (or products) mentioned in this datasheet are no longer being manufactured and may not be ordered (OBS)

FIGURE 8. BAUD RATE GENERATOR

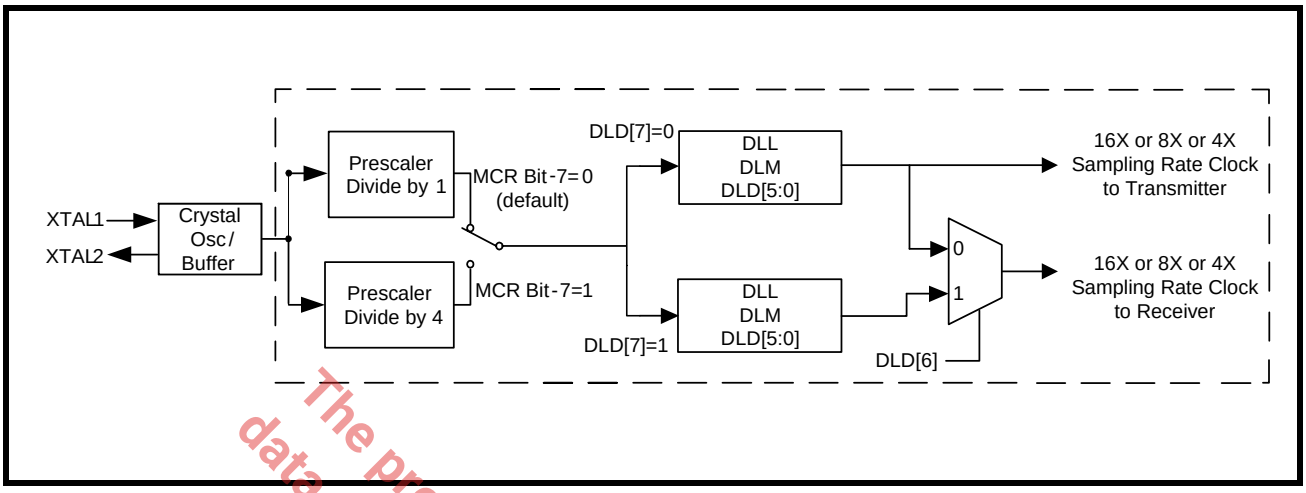

The product(s) mentioned in this data sheet are no longer being manufactured and may not be ordered (OBS)

TABLE 3: TYPICAL DATA RATES WITH A 24 MHZ CRYSTAL OR EXTERNAL CLOCK AT 16X SAMPLING

Required Output Data Rate	Divisor for 16x Clock (Decimal)	Divisor Obtainable in M580	DLM Program Value (HEX)	DLL Program Value (HEX)	DLD Program Value (HEX)	Data Error Rate (%)
400	3750	3750	E	A6	0	0
2400	625	625	2	71	0	0
4800	312.5	312 8/16	1	38	8	0
9600	156.25	156 4/16	0	9C	4	0
10000	150	150	0	96	0	0
19200	78.125	78 2/16	0	4E	2	0
25000	60	60	0	3C	0	0
28800	52.0833	52 1/16	0	34	1	0.04
38400	39.0625	39 1/16	0	27	1	0
50000	30	30	0	1E	0	0
57600	26.0417	26 1/16	0	1A	1	0.08
75000	20	20	0	14	0	0
100000	15	15	0	F	0	0
115200	13.0208	13	0	D	0	0.16
153600	9.7656	9 12/16	0	9	C	0.16
200000	7.5	7 8/16	0	7	8	0
225000	6.6667	6 11/16	0	6	B	0.31
230400	6.5104	6 8/16	0	6	8	0.16
250000	6	6	0	6	0	0
300000	5	5	0	5	0	0
400000	3.75	3 12/16	0	3	C	0
460800	3.2552	3 4/16	0	3	4	0.16
500000	3	3	0	3	0	0
750000	2	2	0	2	0	0
921600	1.6276	1 10/16	0	1	A	0.16
1000000	1.5	1 8/16	0	1	8	0

2.8 Transmitter

The transmitter section comprises of an 8-bit Transmit Shift Register (TSR) and 16 bytes of FIFO which includes a byte-wide Transmit Holding Register (THR). TSR shifts out every data bit with the 16X/8X/4X internal clock. A bit time is 16/8/4 clock periods. The transmitter sends the start-bit followed by the number of data bits, inserts the proper parity-bit if enabled, and adds the stop-bit(s). The status of the FIFO and TSR are reported in the Line Status Register (LSR bit-5 and bit-6).

2.8.1 Transmit Holding Register (THR) - Write Only

The transmit holding register is an 8-bit register providing a data interface to the host processor. The host writes transmit data byte to the THR to be converted into a serial data stream including start-bit, data bits, parity-bit and stop-bit(s). The least-significant-bit (Bit-0) becomes first data bit to go out. The THR is the input register to the transmit FIFO of 16 bytes when FIFO operation is enabled by FCR bit-0. Every time a write operation is made to the THR, the FIFO data pointer is automatically bumped to the next sequential data location.

2.8.2 Transmitter Operation in non-FIFO Mode

The host loads transmit data to THR one character at a time. The THR empty flag (LSR bit-5) is set when the data byte is transferred to TSR. THR flag can generate a transmit empty interrupt (ISR bit-1) when it is enabled by IER bit-1. The TSR flag (LSR bit-6) is set when TSR becomes completely empty.

FIGURE 9. TRANSMITTER OPERATION IN NON-FIFO MODE

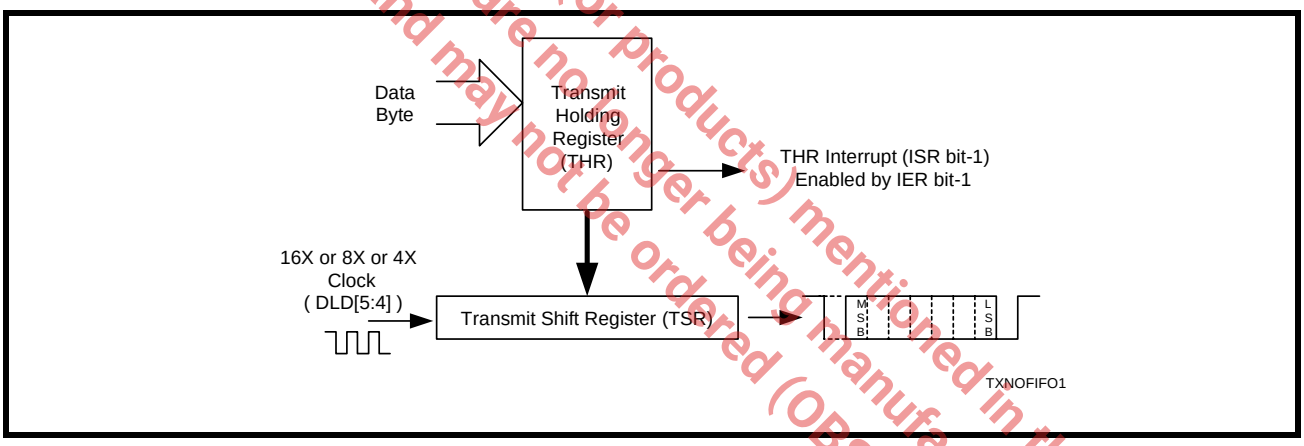

The product (or products) mentioned in this data sheet are no longer being manufactured and may not be ordered (OBS)

2.8.3 Transmitter Operation in FIFO Mode

The host may fill the transmit FIFO with up to 16 bytes of transmit data. The THR empty flag (LSR bit-5) is set whenever the FIFO is empty. The THR empty flag can generate a transmit empty interrupt (ISR bit-1) when the FIFO becomes empty. The transmit empty interrupt is enabled by IER bit-1. The TSR flag (LSR bit-6) is set when TSR/FIFO becomes empty.

FIGURE 10. TRANSMITTER OPERATION IN FIFO AND FLOW CONTROL MODE

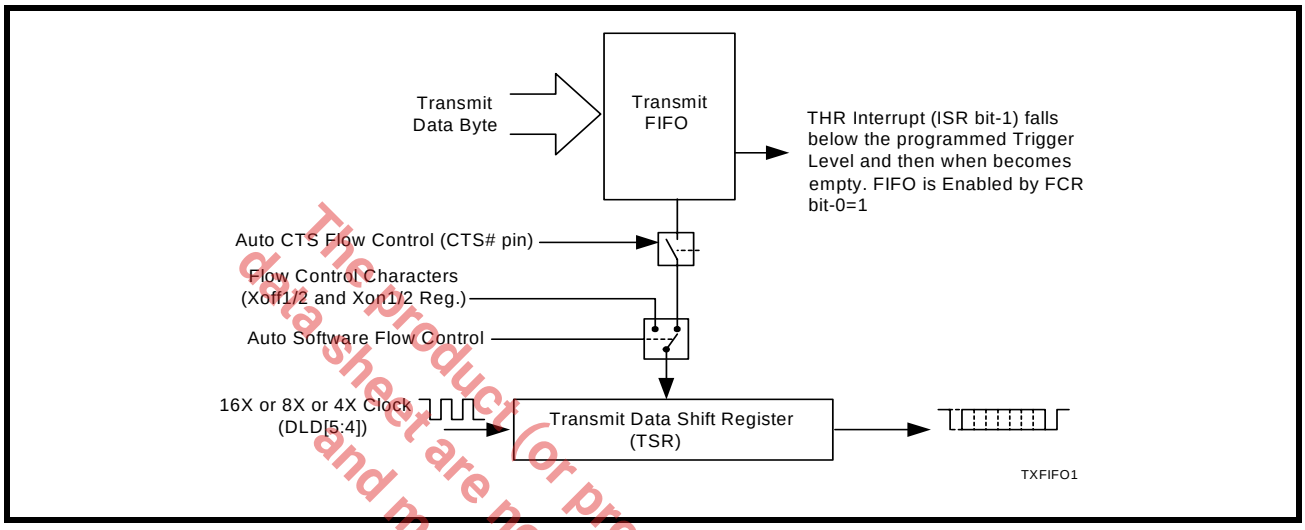

The product (or process) mentioned in this data sheet are no longer being manufactured and may not be ordered (OBS)

2.9 Receiver

The receiver section contains an 8-bit Receive Shift Register (RSR) and 16 bytes of FIFO which includes a byte-wide Receive Holding Register (RHR). The RSR uses the 16X/8X/4X clock (DLD[5:4]) for timing. It verifies and validates every bit on the incoming character in the middle of each data bit. On the falling edge of a start or false start bit, an internal receiver counter starts counting at the 16X/8X/4X clock rate. After 8 clocks (or 4 if 8X or 2 if 4X) the start bit period should be at the center of the start bit. At this time the start bit is sampled and if it is still a logic 0 it is validated. Evaluating the start bit in this manner prevents the receiver from assembling a false character. The rest of the data bits and stop bits are sampled and validated in this same manner to prevent false framing. If there were any error(s), they are reported in the LSR register bits 2-4. Upon unloading the receive data byte from RHR, the receive FIFO pointer is bumped and the error tags are immediately updated to reflect the status of the data byte in RHR register. RHR can generate a receive data ready interrupt upon receiving a character or delay until it reaches the FIFO trigger level. Furthermore, data delivery to the host is guaranteed by a receive data ready time-out interrupt when data is not received for 4 word lengths as defined by LCR[1:0] plus 12 bits time. This is equivalent to 3.7-4.6 character times. The RHR interrupt is enabled by IER bit-0. See **Figure 11** and **Figure 12** below.

2.9.1 Receive Holding Register (RHR) - Read-Only

The Receive Holding Register is an 8-bit register that holds a receive data byte from the Receive Shift Register. It provides the receive data interface to the host processor. The RHR register is part of the receive FIFO of 16 bytes by 11-bits wide, the 3 extra bits are for the 3 error tags to be reported in LSR register. When the FIFO is enabled by FCR bit-0, the RHR contains the first data character received by the FIFO. After the RHR is read, the next character byte is loaded into the RHR and the errors associated with the current data byte are immediately updated in the LSR bits 2-4.

FIGURE 11. RECEIVER OPERATION IN NON-FIFO MODE

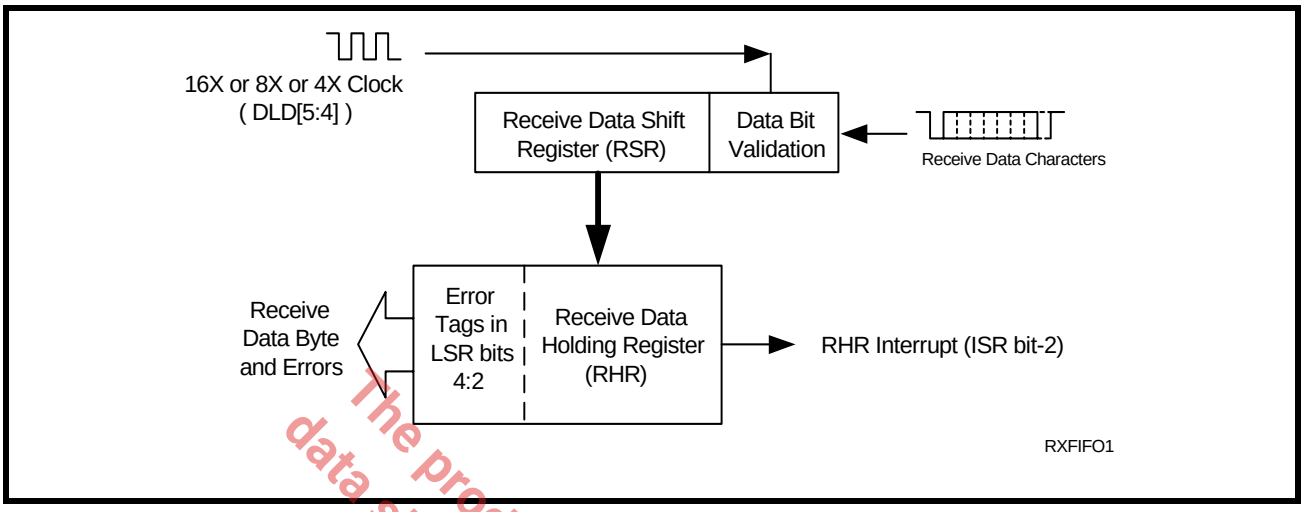

FIGURE 12. RECEIVER OPERATION IN FIFO AND AUTO RTS FLOW CONTROL MODE

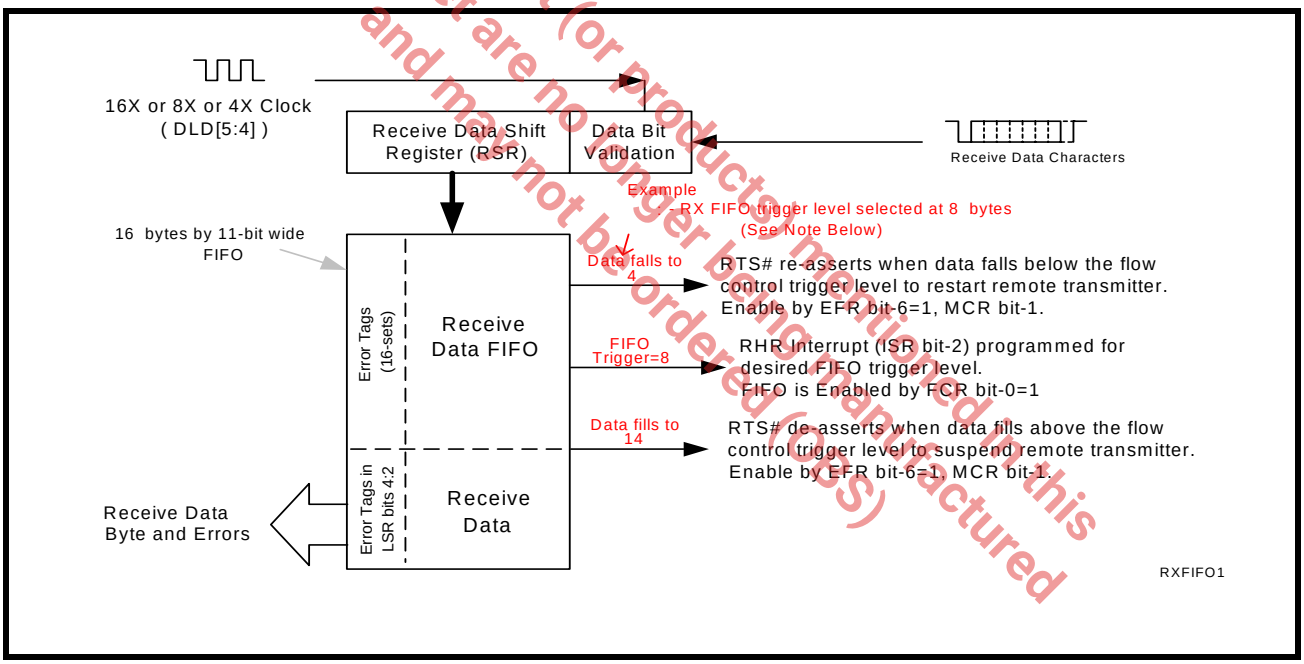

The product (or products mentioned in this data sheet are no longer being manufactured and may not be ordered (OBS)

2.10 Auto RTS (Hardware) Flow Control

Automatic RTS hardware flow control is used to prevent data overrun to the local receiver FIFO. The RTS# output is used to request remote unit to suspend/resume data transmission. The auto RTS flow control features is enabled to fit specific application requirement (see Figure 13):

- Enable auto RTS flow control using EFR bit-6.
- The auto RTS function must be started by asserting RTS# output pin (MCR bit-1 to logic 1 after it is enabled).

If using the Auto RTS interrupt:

- Enable RTS interrupt through IER bit-6 (after setting EFR bit-4). The UART issues an interrupt when the RTS# pin makes a transition from low to high: ISR bit-5 will be set to logic 1.

2.11 Auto RTS Hysteresis

With the Auto RTS function enabled, an interrupt is generated when the receive FIFO reaches the selected RX trigger level. The RTS# pin will not be forced HIGH (RTS off) until the receive FIFO reaches one trigger level above the selected trigger level in the trigger table (Table 9). The RTS# pin will return LOW after the RX FIFO is unloaded to one level below the selected trigger level. Under the above described conditions, the M580 will continue to accept data until the receive FIFO gets full. The Auto RTS function is initiated when the RTS# output pin is asserted LOW (RTS On).

The Product (or products) mentioned in this data sheet are no longer being manufactured and may not be ordered (OBS)

TABLE 4: AUTO RTS (HARDWARE) FLOW CONTROL

RX TRIGGER LEVEL	INT PIN ACTIVATION	RTS# DE-ASSERTED (HIGH) (CHARACTERS IN RX FIFO)	RTS# ASSERTED (LOW) (CHARACTERS IN RX FIFO)
1	1	4	0
4	4	8	1
8	8	14	8
14	14	14	14

2.12 Auto CTS Flow Control

Automatic CTS flow control is used to prevent data overrun to the remote receiver FIFO. The CTS# input is monitored to suspend/restart the local transmitter. The auto CTS flow control feature is selected to fit specific application requirement (see Figure 13):

- Enable auto CTS flow control using EFR bit-7.

If needed, the CTS interrupt can be enabled through IER bit-7 (after setting EFR bit-4). The UART issues an interrupt when the CTS# pin is de-asserted (HIGH): ISR bit-5 will be set to 1, and UART will suspend

transmission as soon as the stop bit of the character in process is shifted out. Transmission is resumed after the CTS# input is re-asserted (LOW), indicating more data may be sent.

FIGURE 13. AUTO RTS AND CTS FLOW CONTROL OPERATION

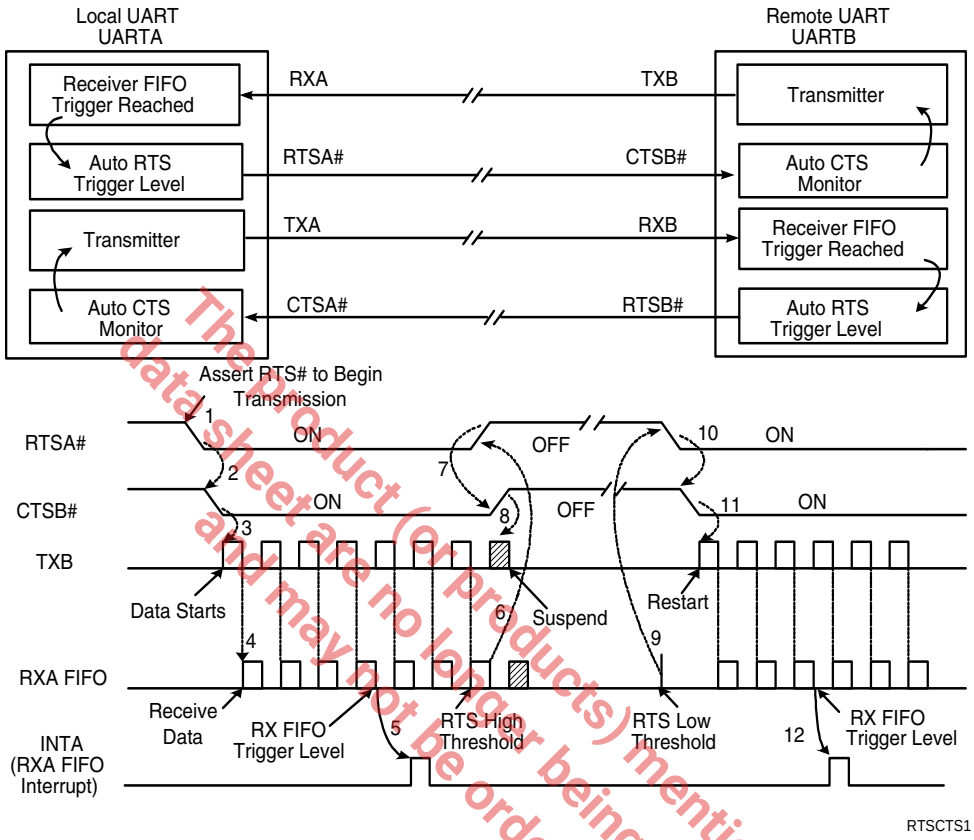

The local UART (UARTA) starts data transfer by asserting RTSA# (1). RTSA# is normally connected to CTSB# (2) of remote UART (UARTB). CTSB# allows its transmitter to send data (3). TXB data arrives and fills UARTA receive FIFO (4). When RXA data fills up to its receive FIFO trigger level, UARTA activates its RXA data ready interrupt (5) and continues to receive and put data into its FIFO. If interrupt service latency is long and data is not being unloaded, UARTA monitors its receive data fill level to match the upper threshold of RTS delay and de-assert RTSA# (6). CTSB# follows (7) and request UARTB transmitter to suspend data transfer. UARTB stops or finishes sending the data bits in its transmit shift register (8). When receive FIFO data in UARTA is unloaded to match the lower threshold of RTS delay (9), UARTA re-asserts RTSA# (10), CTSB# recognizes the change (11) and restarts its transmitter and data flow again until next receive FIFO trigger (12). This same event applies to the reverse direction when UARTA sends data to UARTB with RTSB# and CTSA# controlling the data flow.

The product (or products) mentioned in this datasheet are no longer being manufactured and may not be ordered (obso)

2.13 Auto Xon/Xoff (Software) Flow Control

When software flow control is enabled (See Table 15), the M580 compares one or two sequential receive data characters with the programmed Xon or Xoff-1,2 character value(s). If receive character(s) (RX) match the programmed values, the M580 will halt transmission (TX) as soon as the current character has completed transmission. When a match occurs, the Xoff (if enabled via IER bit-5) flag will be set and the interrupt output pin will be activated. Following a suspension due to a match of the Xoff character, the M580 will monitor the receive data stream for a match to the Xon-1,2 character. If a match is found, the M580 will resume operation and clear the flags (ISR bit-4).

Reset initially sets the contents of the Xon/Xoff 8-bit flow control registers to a logic 0. Following reset the user can write any Xon/Xoff value desired for software flow control. Different conditions can be set to detect Xon/Xoff characters (See Table 15) and suspend/resume transmissions. When double 8-bit Xon/Xoff characters are selected, the M580 compares two consecutive receive characters with two software flow control 8-bit values (Xon1, Xon2, Xoff1, Xoff2) and controls TX transmissions accordingly. Under the above described flow control mechanisms, flow control characters are not placed (stacked) in the user accessible RX data buffer or FIFO.

In the event that the receive buffer is overfilling and flow control needs to be executed, the M580 automatically sends an Xoff message (when enabled) via the serial TX output to the remote modem. The M580 sends the Xoff-1,2 characters two-character-times (= time taken to send two characters at the programmed baud rate) after the receive FIFO crosses the selected trigger level. To clear this condition, the M580 will transmit the programmed Xon-1,2 characters as soon as receive FIFO is less than one trigger level below the selected trigger level. Table 5 below explains this.

The product (or products) mentioned in this data sheet are no longer being manufactured and may not be ordered (OBS)

TABLE 5: AUTO XON/XOFF (SOFTWARE) FLOW CONTROL

RX TRIGGER LEVEL	INT PIN ACTIVATION	XOFF CHARACTER(S) SENT (CHARACTERS IN RX FIFO)	XON CHARACTER(S) SENT (CHARACTERS IN RX FIFO)
1	1	1*	0
4	4	4*	1
8	8	8*	4
14	14	14*	8

* *After the trigger level is reached, an xoff character is sent after a short span of time (= time required to send 2* characters); for example, after 2.083ms has elapsed for 9600 baud and 10-bit word length setting.

2.14 Special Character Detect

A special character detect feature is provided to detect an 8-bit character when bit-5 is set in the Enhanced Feature Register (EFR). When this character (Xoff2) is detected, it will be placed in the FIFO along with normal incoming RX data.

The M580 compares each incoming receive character with Xoff-2 data. If a match exists, the received data will be transferred to the RX FIFO and ISR bit-4 will be set to indicate detection of special character. Although the Internal Register Table shows Xon, Xoff Registers with eight bits of character information, the actual number of bits is dependent on the programmed word length. Line Control Register (LCR) bits 0-1 defines the number of character bits, i.e., either 5 bits, 6 bits, 7 bits, or 8 bits. The word length selected by LCR bits 0-1 also determines the number of bits that will be used for the special character comparison. Bit-0 in the Xon, Xoff Registers corresponds with the LSB bit for the receive character.

2.15 Normal Multidrop Mode

Normal multidrop mode is enabled when MSR[6] = 1 (requires EFR[4] = 1) and EFR[5] = 0 (Special Character Detect disabled). The receiver is set to Force Parity 0 (LCR[5:3] = '111') in order to detect address bytes.

With the receiver initially disabled, it ignores all the data bytes (parity bit = 0) until an address byte is received (parity bit = 1). This address byte will cause the UART to set the parity error. The UART will generate an LSR

interrupt and place the address byte in the RX FIFO. The software then examines the byte and enables the receiver if the address matches its slave address, otherwise, it does not enable the receiver.

If the receiver has been enabled, the receiver will receive the subsequent data. If an address byte is received, it will generate an LSR interrupt. The software again examines the byte and if the address matches its slave address, it does not have to do anything. If the address does not match its slave address, then the receiver should be disabled.

2.15.1 Auto Address Detection

Auto address detection mode is enabled when MSR[6] = 1 (requires EFR[4] = 1) and EFR bit-5 = 1. The desired slave address will need to be written into the XOFF2 register. The receiver will try to detect an address byte that matches the porgrammed character in the XOFF2 register. If the received byte is a data byte or an address byte that does not match the programmed character in the XOFF2 register, the receiver will discard these data. Upon receiving an address byte that matches the XOFF2 character, the receiver will be automatically enabled if not already enabled, and the address character is pushed into the RX FIFO along with the parity bit (in place of the parity error bit). The receiver also generates an LSR interrupt. The receiver will then receive the subsequent data. If another address byte is received and this address does not match the programmed XOFF2 character, then the receiver will automatically be disabled and the address byte is ignored. If the address byte matches XOFF2, the receiver will put this byte in the RX FIFO along with the parity bit in the parity error bit.

2.16 Infrared Mode

The M580 UART includes the infrared encoder and decoder compatible to the IrDA (Infrared Data Association) version 1.0 and 1.1. The IrDA 1.0 standard that stipulates the infrared encoder sends out a 3/16 of a bit wide HIGH-pulse for each “0” bit in the transmit data stream with a data rate up to 115.2 Kbps. For the IrDA 1.1 standard, the infrared encoder sends out a 1/4 of a bit time wide HIGH-pulse for each "0" bit in the transmit data stream with a data rate up to 1.152 Mbps. This signal encoding reduces the on-time of the infrared LED, hence reduces the power consumption. See **Figure 14** below.

The infrared encoder and decoder are enabled by setting MCR register bit-6 to a ‘1’. With this bit enabled, the infrared encoder and decoder is compatible to the IrDA 1.0 standard. For the infrared encoder and decoder to be compatible to the IrDA 1.1 standard, MSR bit-7 will also need to be set to a ’1’ when EFR bit-4 is set to ’1’. Likewise, the RX input assumes an idle level of logic zero from a reset and power up, see **Figure 14**.

Typically, the wireless infrared decoder receives the input pulse from the infrared sensing diode on the RX pin. Each time it senses a light pulse, it returns a logic 1 to the data bit stream.

The product (or products) mentioned in this data sheet are no longer being manufactured and may not be ordered (OBS)

FIGURE 14. INFRARED TRANSMIT DATA ENCODING AND RECEIVE DATA DECODING

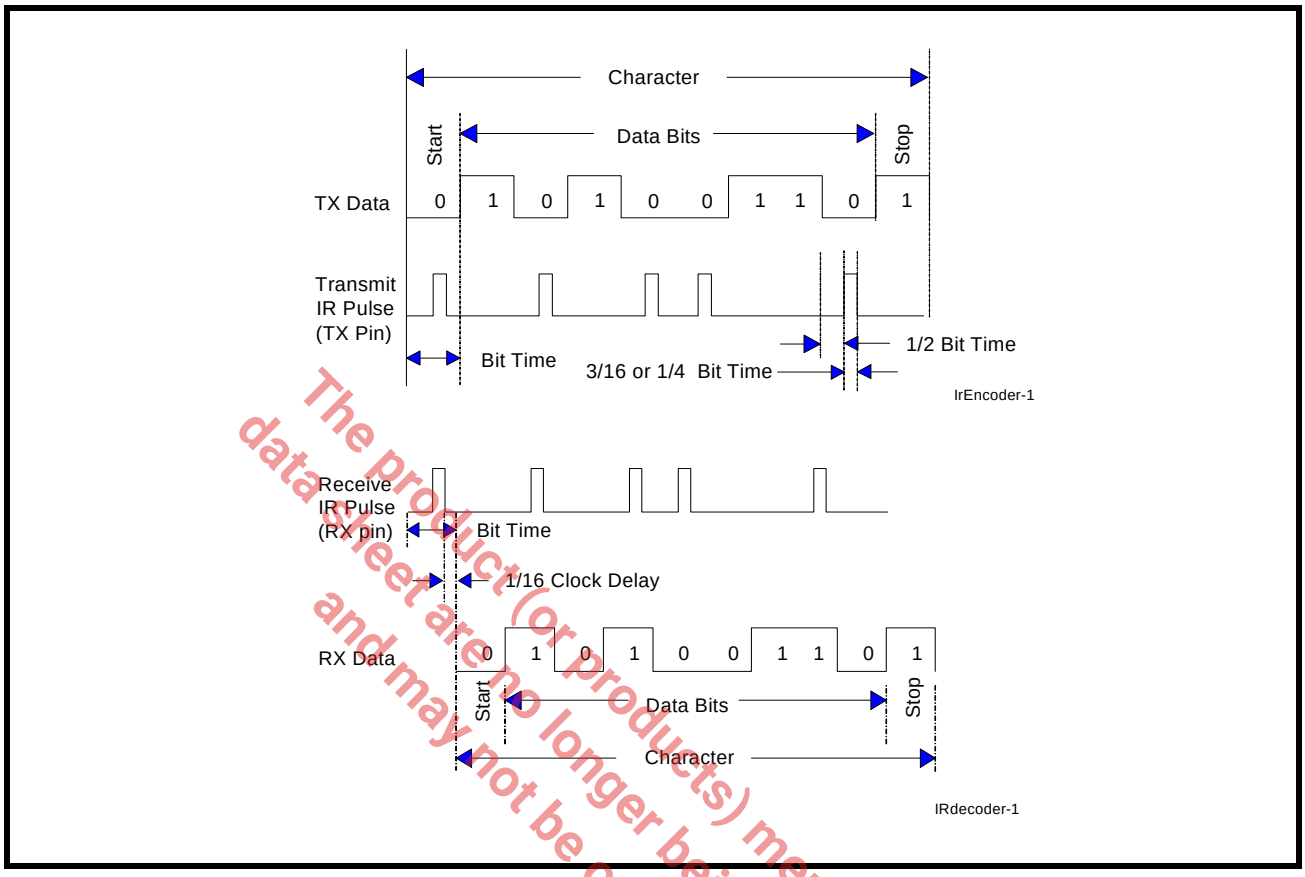

The product (or products) mentioned in this datasheet are no longer being manufactured and may not be ordered (OBS)

2.17 Sleep Mode with Auto Wake-Up and Power-Save feature

The M580 supports low voltage system designs, hence, a sleep mode with auto wake-up and power-save feature is included to reduce its power consumption when the chip is not actively used.

2.17.1 Sleep mode

All of these conditions must be satisfied for the M580 to enter sleep mode:

- no interrupts pending (ISR bit-0 = 1)
- sleep mode is enabled (IER bit-4 = 1)
- modem inputs are not toggling (MSR bits 0-3 = 0)
- RX input pin is idling HIGH in normal mode or LOW in infrared mode
- divisor is non-zero
- TX and RX FIFOs are empty

The M580 stops its crystal oscillator to conserve power in the sleep mode. User can check the XTAL2 pin for no clock output as an indication that the device has entered the sleep mode.

The M580 resumes normal operation by any of the following:

- a receive data start bit transition (HIGH to LOW)
- a data byte is loaded to the transmitter, THR or FIFO
- a change of logic state on any of the modem or general purpose serial inputs: CTS#, DSR#, CD#, RI#

If the M580 is awakened by any one of the above conditions, it will return to the sleep mode automatically after all interrupting conditions have been serviced and cleared. If the M580 is awakened by the modem inputs, a read to the MSR is required to reset the modem inputs. In any case, the sleep mode will not be entered while

an interrupt is pending from any channel. The M580 will stay in the sleep mode of operation until it is disabled by setting IER bit-4 to a logic 0.

A word of caution: owing to the starting up delay of the crystal oscillator after waking up from sleep mode, the first few receive characters may be lost. Also, make sure the RX pin is idling HIGH or “marking” condition during sleep mode. This may not occur when the external interface transceivers (RS-232, RS-485 or another type) are also put to sleep mode and cannot maintain the “marking” condition. To avoid this, the system design engineer can use a 47k ohm pull-up resistor on each of the RX input.

2.17.2 Power-Save Feature

If the address lines, data bus lines, IOW#, IOR#, CS# and modem input lines remain steady when the M580 is in sleep mode, the maximum current will be in the microamp range as specified in the DC Electrical Characteristics on **page 43**. If the input lines are floating or are toggling while the M580 is in sleep mode, the current can be up to 100 times more. If not using the Power-Save feature, an external buffer would be required to keep the address and data bus lines from toggling or floating to achieve the low current. But if the Power-Save feature is enabled (PwrSave pin connected to VCC), this will eliminate the need for an external buffer by internally isolating the address, data and control signals (see **Figure 1** on **page 1**) from other bus activities that could cause wasteful power drain. The M580 enters Power-Save mode when this pin is connected to VCC and the M580 is in sleep mode (see Sleep Mode section above).

Since Power-Save mode isolates the address, data and control signals, the device will wake-up only by:

- a receive data start bit transition (HIGH to LOW) at the RX input or
- a change of logic state on the modem or general purpose serial input CTS#, DSR#, CD#, RI#

The M580 will return to the Power-Save mode automatically after a read to the MSR (to reset the modem input CTS#) and all interrupting conditions have been serviced and cleared. The M580 will stay in the Power-Save mode of operation until it is disabled by setting IER bit-4 to a logic 0 and/or the Power-Save pin is connected to GND.

2.17.3 Wake-up Interrupt

The M580 has the wake up interrupt. By setting the FCR bit-3, wake up interrupt is enabled or disabled. The default status of wake up interrupt is disabled. Please **See ”Section 4.5: FIFO Control Register (FCR) - Write-Only” on page 30.**

This product (or products) mentioned in this datasheet are no longer being manufactured and may not be ordered (OBS)

2.18 Internal Loopback

The M580 UART provides an internal loopback capability for system diagnostic purposes. The internal loopback mode is enabled by setting MCR register bit-4 to logic 1. All regular UART functions operate normally. Figure 15 shows how the modem port signals are re-configured. Transmit data from the transmit shift register output is internally routed to the receive shift register input allowing the system to receive the same data that it was sending. The TX pin is held HIGH or mark condition while RTS# and DTR# are de-asserted, and CTS#, DSR# CD# and RI# inputs are ignored. Caution: the RX input must be held HIGH during loopback test else upon exiting the loopback test the UART may detect and report a false “break” signal.

FIGURE 15. INTERNAL LOOPBACK

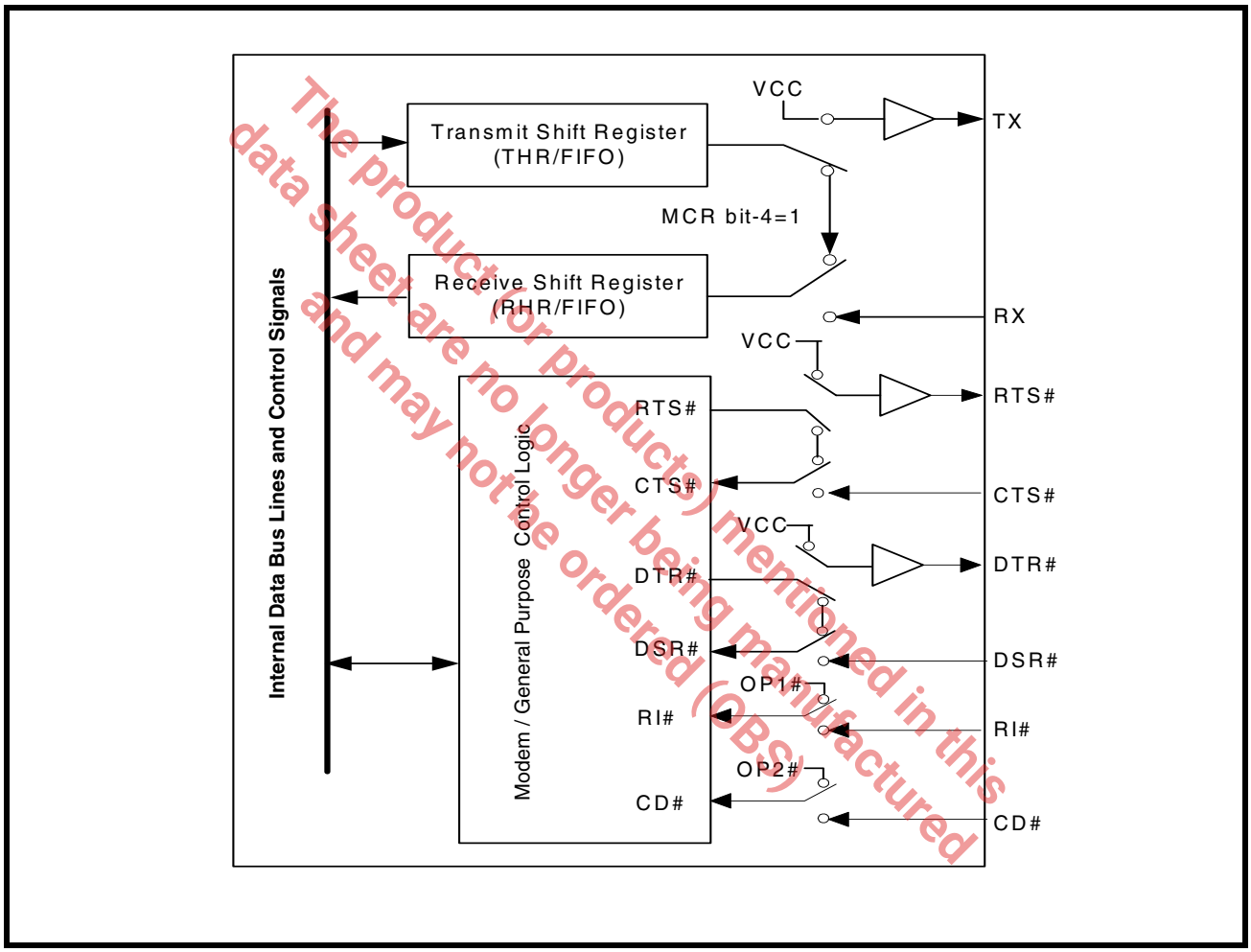

The product(s) mentioned in this data sheet are no longer being manufactured and may not be ordered (OBS)

3.0 UART INTERNAL REGISTERS

The complete register set for the M580 is shown in Table 6 and Table 7.

TABLE 6: UART INTERNAL REGISTERS

A2 A1 A0 ADDRESSES	REGISTER	READ/WRITE	COMMENTS
16C550 COMPATIBLE REGISTERS			
0 0 0	DREV - Device Revision	Read-only	LCR[7] = 1, LCR ≠ 0xBF, DLL = 0x00, DLM = 0x00
0 0 1	DVID - Device Identification Register	Read-only	
0 0 0	DLL - Divisor LSB Register	Read/Write	LCR[7] = 1, LCR ≠ 0xBF See DLD[7:6]
0 0 1	DLM - Divisor MSB Register	Read/Write	
0 1 0	DLD - Divisor Fractional Register	Read/Write	LCR[7] = 1, LCR ≠ 0xBF, EFR[4] = 1
0 0 0	RHR - Receive Holding Register THR - Transmit Holding Register	Read-only Write-only	LCR[7] = 0
0 0 1	IER - Interrupt Enable Register	Read/Write	
0 1 0	ISR - Interrupt Status Register FCR - FIFO Control Register	Read-only Write-only	LCR[7] = 0 if EFR[4] = 1 or LCR ≠ 0xBF if EFR[4] = 0
0 1 1	LCR - Line Control Register	Read/Write	
1 0 0	MCR - Modem Control Register	Read/Write	LCR ≠ 0xBF
1 0 1	LSR - Line Status Register	Read-only	
1 1 0	MSR - Modem Status Register	Read-only	
1 1 0	MSR - Modem Status Register	Write-only	LCR ≠ 0xBF EFR[4] = 1
1 1 1	SPR - Scratch Pad Register	Read/Write	LCR ≠ 0xBF, FCTR[6] = 0
1 1 1	EMSR - Enhanced Mode Select Register	Write-only	LCR ≠ 0xBF, FCTR[6] = 1
1 1 1	FC - RX/TX FIFO Level Counter Register	Read-only	
ENHANCED REGISTERS			
0 0 0	FC - RX/TX FIFO Level Counter Register	Read-only	LCR = 0xBF
0 0 1	FCTR - Feature Control Register	Read/Write	
0 1 0	EFR - Enhanced Function Reg	Read/Write	
1 0 0	Xon-1 - Xon Character 1	Read/Write	
1 0 1	Xon-2 - Xon Character 2	Read/Write	
1 1 0	Xoff-1 - Xoff Character 1	Read/Write	
1 1 1	Xoff-2 - Xoff Character 2	Read/Write	

The product (or products) mentioned in this data sheet are no longer being manufactured and may not be ordered (OBS).

TABLE 7: INTERNAL REGISTERS DESCRIPTION. SHADED BITS ARE ENABLED WHEN EFR BIT-4=1

ADDRESS A2-A0	REG NAME	READ/ WRITE	BIT-7	BIT-6	BIT-5	BIT-4	BIT-3	BIT-2	BIT-1	BIT-0	COMMENT
16C550 Compatible Registers											
0 0 0	RHR	RD	Bit-7	Bit-6	Bit-5	Bit-4	Bit-3	Bit-2	Bit-1	Bit-0	
0 0 0	THR	WR	Bit-7	Bit-6	Bit-5	Bit-4	Bit-3	Bit-2	Bit-1	Bit-0	
0 0 1	IER	RD/WR	0/ CTS# Int. Enable	0/ RTS# Int. Enable	0/ Xoff Int. Enable	0/ Sleep Mode Enable	Modem Stat. Int. Enable	RX Line Stat. Int. Enable	TX Empty Int Enable	RX Data Int. Enable	LCR[7] = 0
0 1 0	ISR	RD	FIFOs Enabled	FIFOs Enabled	0/ RTS CTS Interrupt	0/ Xoff Interrupt	INT Source Bit-3	INT Source Bit-2	INT Source Bit-1	INT Source Bit-0	LCR[7] = 0 if EFR[4]=1 or LCR≠0xBF if EFR[4]=0
0 1 0	FCR	WR	RX FIFO Trigger	RX FIFO Trigger	TX FIFO Trigger	TX FIFO Trigger	Wake up Int Enable	TX FIFO Reset	RX FIFO Reset	FIFOs Enable	
0 1 1	LCR	RD/WR	Divisor Enable	Set TX Break	Set Parity	Even Parity	Parity Enable	Stop Bits	Word Length Bit-1	Word Length Bit-0	
1 0 0	MCR	RD/WR	0/ BRG Pres-caler	0/ IR Mode ENable	0/ XonAny	Internal Lopback Enable	INT Out-put Enable (OP2#)	OP1#	RTS# Output Control	DTR# Output Control	LCR≠0xBF
1 0 1	LSR	RD	RX FIFO Global Error	THR & TSR Empty	THR Empty	RX Break	RX Fram-ing Error	RX Parity Error	RX Over-run Error	RX Data Ready	
1 1 0	MSR	RD	CD# Input	RI# Input	DSR# Input	CTS# Input	Delta CD#	Delta RI#	Delta DSR#	Delta CTS#	
		WR	Fast IR	Enable 9-bit mode	Disable RX	Disable TX	0	0	0	0	
1 1 1	SPR	RD/WR	Bit-7	Bit-6	Bit-5	Bit-4	Bit-3	Bit-2	Bit-1	Bit-0	LCR≠0xBF FCTR[6]=0
1 1 1	EMSR	WR	Xoff interrupt mode select	LSR interrupt mode select	0	0	Invert RTS in RS485 mode	Send TX imme-diate	FIFO count control bit-1	FIFO count control bit-0	LCR≠0xBF FCTR[6]=1
1 1 1	FC	RD	Bit-7	Bit-6	Bit-5	Bit-4	Bit-3	Bit-2	Bit-1	Bit-0	

The product (or products) mentioned in this data sheet are no longer being manufactured and may not be ordered (OBS)

TABLE 7: INTERNAL REGISTERS DESCRIPTION. SHADED BITS ARE ENABLED WHEN EFR BIT-4=1

ADDRESS A2-A0	REG NAME	READ/ WRITE	BIT-7	BIT-6	BIT-5	BIT-4	BIT-3	BIT-2	BIT-1	BIT-0	COMMENT
Baud Rate Generator Divisor											
0 0 0	DREV	RD	Bit-7	Bit-6	Bit-5	Bit-4	Bit-3	Bit-2	Bit-1	Bit-0	LCR[7] = 1 LCR≠0xBF DLL= 0x00 DLM= 0x00
0 0 1	DVID	RD	0	0	0	0	0	0	0	1	
0 0 0	DLL	RD/WR	Bit-7	Bit-6	Bit-5	Bit-4	Bit-3	Bit-2	Bit-1	Bit-0	LCR[7] = 1 LCR≠0xBF DLD[7:6]
0 0 1	DLM	RD/WR	Bit-7	Bit-6	Bit-5	Bit-4	Bit-3	Bit-2	Bit-1	Bit-0	
0 1 0	DLD	RD/WR	BRG select	Enable Indepen-dent BRG	4X Mode	8X Mode	Bit-3	Bit-2	Bit-1	Bit-0	LCR[7] = 1 LCR≠0xBF EFR[4] = 1
Enhanced Registers											
0 0 0	FC	RD	Bit-7	Bit-6	Bit-5	Bit-4	Bit-3	Bit-2	Bit-1	Bit-0	LCR=0xBF
0 0 1	FCTR	RD/WR	RX/TX select	Swap SCR	0	0	RS485 interrupt mode	invert RX IR	0	0	
0 1 0	EFR	RD/WR	Auto CTS# Enable	Auto RTS# Enable	Special Char Select	Enable IER [7:4], ISR [5:4], FCR[5:3], MCR[7:5], DLD	Soft-ware Flow Cntl Bit-3	Soft-ware Flow Cntl Bit-2	Soft-ware Flow Cntl Bit-1	Soft-ware Flow Cntl Bit-0	
1 0 0	XON1	RD/WR	Bit-7	Bit-6	Bit-5	Bit-4	Bit-3	Bit-2	Bit-1	Bit-0	
1 0 1	XON2	RD/WR	Bit-7	Bit-6	Bit-5	Bit-4	Bit-3	Bit-2	Bit-1	Bit-0	
1 1 0	XOFF1	RD/WR	Bit-7	Bit-6	Bit-5	Bit-4	Bit-3	Bit-2	Bit-1	Bit-0	
1 1 1	XOFF2	RD/WR	Bit-7	Bit-6	Bit-5	Bit-4	Bit-3	Bit-2	Bit-1	Bit-0	

The product (or products) mentioned in this data sheet are no longer being manufactured and may not be ordered (OBS)

4.0 INTERNAL REGISTER DESCRIPTIONS

4.1 Receive Holding Register (RHR) - Read- Only

SEE"RECEIVER" ON PAGE 15.

4.2 Transmit Holding Register (THR) - Write-Only

SEE"TRANSMITTER" ON PAGE 14.

4.3 Interrupt Enable Register (IER) - Read/Write

The Interrupt Enable Register (IER) masks the interrupts from receive data ready, transmit empty, line status and modem status registers. These interrupts are reported in the Interrupt Status Register (ISR).

4.3.1 IER versus Receive FIFO Interrupt Mode Operation

When the receive FIFO (FCR BIT-0 = 1) and receive interrupts (IER BIT-0 = 1) are enabled, the RHR interrupts (see ISR bits 2 and 3) status will reflect the following:

A. The receive data available interrupts are issued to the host when the FIFO has reached the selected trigger level. It will be cleared when the FIFO drops below the selected trigger level.

B. FIFO level will be reflected in the ISR register when the FIFO trigger level is reached. Both the ISR register status bit and the interrupt will be cleared when the FIFO drops below the trigger level.

C. The receive data ready bit (LSR BIT-0) is set as soon as a character is transferred from the shift register to the receive FIFO. It is reset when the FIFO is empty.

4.3.2 IER versus Receive/Transmit FIFO Polled Mode Operation

When FCR BIT-0 equals a logic 1 for FIFO enable; resetting IER bits 0-3 enables the XR16M580 in the FIFO polled mode of operation. Since the receiver and transmitter have separate bits in the LSR either or both can be used in the polled mode by selecting respective transmit or receive control bit(s).

A. LSR BIT-0 indicates there is data in RHR or RX FIFO.

B. LSR BIT-1 indicates an overrun error has occurred and that data in the FIFO may not be valid.

C. LSR BIT 2-4 provides the type of receive data errors encountered for the data byte in RHR, if any.

D. LSR BIT-5 indicates THR is empty.

E. LSR BIT-6 indicates when both the transmit FIFO and TSR are empty.

F. LSR BIT-7 indicates a data error in at least one character in the RX FIFO.

IER[0]: RHR Interrupt Enable

The receive data ready interrupt will be issued when RHR has a data character in the non-FIFO mode or when the receive FIFO has reached the selected trigger level in the FIFO mode.

Logic 0 = Disable the receive data ready interrupt (default).

Logic 1 = Enable the receiver data ready interrupt.

IER[1]: THR Interrupt Enable

This bit enables the Transmit Ready interrupt which is issued whenever the THR becomes empty in the non-FIFO mode or when data in the FIFO falls below the selected trigger level in the FIFO mode. If the THR is empty when this bit is enabled, an interrupt will be generated.

Logic 0 = Disable Transmit Ready interrupt (default).

Logic 1 = Enable Transmit Ready interrupt.

IER[2]: Receive Line Status Interrupt Enable

If any of the LSR register bits 1, 2, 3 or 4 is a logic 1, it will generate an interrupt to inform the host controller about the error status of the current data byte in FIFO. LSR bit-1 generates an interrupt immediately when an overrun occurs. LSR bits 2-4 generate an interrupt when the character in the RHR has an error. However, when EMSR bit-6 changes to 1 (default is 0), LSR bit 2-4 generate an interrupt when the character is received in the RX FIFO. See **“Section 4.12, Enhanced Mode Select Register (EMSR) - Write-only” on page 37**.

- Logic 0 = Disable the receiver line status interrupt (default).
- Logic 1 = Enable the receiver line status interrupt.

IER[3]: Modem Status Interrupt Enable

- Logic 0 = Disable the modem status register interrupt (default).
- Logic 1 = Enable the modem status register interrupt.

The product (of product(s) mentioned in this data sheet are no longer being manufactured and may not be ordered (OBS)

IER[4]: Sleep Mode Enable (requires EFR[4] = 1)

- Logic 0 = Disable Sleep Mode (default).
- Logic 1 = Enable Sleep Mode. See Sleep Mode section for further details.

IER[5]: Xoff Interrupt Enable (requires EFR[4]=1)

- Logic 0 = Disable the software flow control, receive Xoff interrupt. (default)
- Logic 1 = Enable the software flow control, receive Xoff interrupt. See Software Flow Control section for details.

IER[6]: RTS# Output Interrupt Enable (requires EFR[4]=1)

- Logic 0 = Disable the RTS# interrupt (default).
- Logic 1 = Enable the RTS# interrupt. The UART issues an interrupt when the RTS# pin makes a transition from LOW to HIGH (if enabled by EFR bit-6).

IER[7]: CTS# Input Interrupt Enable (requires EFR[4]=1)

- Logic 0 = Disable the CTS# interrupt (default).
- Logic 1 = Enable the CTS# interrupt. The UART issues an interrupt when CTS# pin makes a transition from LOW to HIGH (if enabled by EFR bit-7).

4.4 Interrupt Status Register (ISR) - Read-Only

The UART provides multiple levels of prioritized interrupts to minimize external software interaction. The Interrupt Status Register (ISR) provides the user with six interrupt status bits. Performing a read cycle on the ISR will give the user the current highest pending interrupt level to be serviced, others are queued up to be serviced next. No other interrupts are acknowledged until the pending interrupt is serviced. The Interrupt Source Table, Table 8, shows the data values (bit 0-5) for the interrupt priority levels and the interrupt sources associated with each of these interrupt levels.

4.4.1 Interrupt Generation:

- LSR is by any of the LSR bits 1, 2, 3 and 4.
- RXRDY is by RX trigger level.
- RXRDY Time-out is by a 4-char plus 12 bits delay timer.
- TXRDY is by TX trigger level or TX FIFO empty.
- MSR is by any of the MSR bits 0, 1, 2 and 3.
- Receive Xon/Xoff/Special character is by detection of a Xon, Xoff or Special character.
- CTS# is when the remote transmitter toggles the input pin (from LOW to HIGH) during auto CTS flow control.
- RTS# is when its receiver toggles the output pin (from LOW to HIGH) during auto RTS flow control.
- Wakeup interrupt is generated when the M580 wakes up from the sleep mode.

4.4.2 Interrupt Clearing:

- LSR interrupt is cleared by a read to the LSR register.
- RXRDY interrupt is cleared by reading data until FIFO falls below the trigger level.
- RXRDY Time-out interrupt is cleared by reading RHR.
- TXRDY interrupt is cleared by a read to the ISR register or writing to THR.
- MSR interrupt is cleared by a read to the MSR register.
- Xon or Xoff interrupt is cleared by a read to the ISR register. See EMSR[7].

The product (or products) mentioned in this data sheet are no longer being manufactured and may not be ordered (OBS)

- Special character interrupt is cleared by a read to ISR register or after next character is received. See EMSR[7].
- RTS# and CTS# flow control interrupts are cleared by a read to the MSR register.
- Wakeup interrupt is cleared by a read to ISR register.

TABLE 8: INTERRUPT SOURCE AND PRIORITY LEVEL

PRIORITY LEVEL	ISR REGISTER STATUS BITS						SOURCE OF INTERRUPT
	BIT-5	BIT-4	BIT-3	BIT-2	BIT-1	BIT-0	
1	0	0	0	1	1	0	LSR (Receiver Line Status Register)
2	0	0	1	1	0	0	RXRDY (Receive Data Time-out)
3	0	0	0	1	0	0	RXRDY (Received Data Ready)
4	0	0	0	0	1	0	TXRDY (Transmit Ready)
5	0	0	0	0	0	0	MSR (Modem Status Register)
6	0	1	0	0	0	0	RXRDY (Received Xon, Xoff or Special character)
7	1	0	0	0	0	0	CTS#, RTS# change of state
-	0	0	0	0	0	1	None (default) or Wakeup interrupt

The product (or products) mentioned in this data sheet are no longer being manufactured and may not be ordered (OBS)

ISR[0]: Interrupt Status

- Logic 0 = An interrupt is pending and the ISR contents may be used as a pointer to the appropriate interrupt service routine.
- Logic 1 = No interrupt pending (default condition).

ISR[3:1]: Interrupt Status

These bits indicate the source for a pending interrupt at interrupt priority levels (See Interrupt Source Table 8).

ISR[4]: Interrupt Status (requires EFR bit-4 = 1)

This bit is enabled when EFR bit-4 is set to a logic 1. ISR bit-4 indicates that the receiver detected a data match of the Xoff, Xon or special character(s).

ISR[5]: Interrupt Status (requires EFR bit-4 = 1)

ISR bit-5 indicates that CTS# or RTS# has changed state from LOW to HIGH.

ISR[7:6]: FIFO Enable Status

These bits are set to a logic 0 when the FIFOs are disabled. They are set to a logic 1 when the FIFOs are enabled.

4.5 FIFO Control Register (FCR) - Write-Only

This register is used to enable the FIFOs, clear the FIFOs, set the transmit/receive FIFO trigger levels, and enable the wake up interrupt. They are defined as follows:

FCR[0]: TX and RX FIFO Enable

- Logic 0 = Disable the transmit and receive FIFO (default).
- Logic 1 = Enable the transmit and receive FIFOs. This bit must be set to logic 1 when other FCR bits are written or they will not be programmed.

FCR[1]: RX FIFO Reset

This bit is only active when FCR bit-0 is a '1'.

- Logic 0 = No receive FIFO reset (default)
- Logic 1 = Reset the receive FIFO pointers and FIFO level counter logic (the receive shift register is not cleared or altered). This bit will return to a logic 0 after resetting the FIFO.

FCR[2]: TX FIFO Reset

This bit is only active when FCR bit-0 is a '1'.

- Logic 0 = No transmit FIFO reset (default).
- Logic 1 = Reset the transmit FIFO pointers and FIFO level counter logic (the transmit shift register is not cleared or altered). This bit will return to a logic 0 after resetting the FIFO.

FCR[3]: Enable wake up interrupt (requires EFR bit-4 = 1)

- Logic 0 = Disable the wake up interrupt (default).
- Logic 1 = Enable the wake up interrupt.

Please refer to **"Section 2.17.3, Wake-up Interrupt" on page 22**.

FCR[5:4]: Transmit FIFO Trigger Select (requires EFR bit-4 = 1)

These 2 bits set the trigger level for the transmit FIFO. The UART will issue a transmit interrupt when the number of characters in the FIFO falls below the selected trigger level, or when it gets empty in case that the FIFO did not get filled over the trigger level on last re-load. **Table 9** below shows the selections. Note that the receiver and the transmitter cannot use different trigger tables. Whichever selection is made last applies to both the RX and TX side.

FCR[7:6]: Receive FIFO Trigger Select

These 2 bits are used to set the trigger level for the receive FIFO. The UART will issue a receive interrupt when the number of the characters in the FIFO crosses the trigger level. **Table 9** shows the complete selections. Note that the receiver and the transmitter cannot use different trigger tables. Whichever selection is made last applies to both the RX and TX side.

The product (or products) mentioned in this data sheet are no longer being manufactured and may not be ordered (OBS)

TABLE 9: TRANSMIT AND RECEIVE FIFO TRIGGER TABLE AND LEVEL SELECTION

FCR BIT-7	FCR BIT-6	FCR BIT-5	FCR BIT-4	RECEIVE TRIGGER LEVEL	TRANSMIT TRIGGER LEVEL	COMPATIBILITY
		0	0		1(default)	16L580
		0	1		4	
		1	0		8	
		1	1		14	
0	0			1(default)		
0	1			4		
1	0			8		
1	1			14		

4.6 Line Control Register (LCR) - Read/Write

The Line Control Register is used to specify the asynchronous data communication format. The word or character length, the number of stop bits, and the parity are selected by writing the appropriate bits in this register.

LCR[1:0]: TX and RX Word Length Select

These two bits specify the word length to be transmitted or received.

BIT-1	BIT-0	WORD LENGTH
0	0	5 (default)
0	1	6
1	0	7
1	1	8

LCR[2]: TX and RX Stop-bit Length Select

The length of stop bit is specified by this bit in conjunction with the programmed word length.

BIT-2	WORD LENGTH	STOP BIT LENGTH (BIT TIME(S))
0	5,6,7,8	1 (default)
1	5	1-1/2
1	6,7,8	2

LCR[3]: TX and RX Parity Select

Parity or no parity can be selected via this bit. The parity bit is a simple way used in communications for data integrity check. See **Table 10** for parity selection summary below.

- Logic 0 = No parity.
- Logic 1 = A parity bit is generated during the transmission while the receiver checks for parity error of the data character received.

The product (or products) mentioned in this datasheet are no longer being manufactured and may not be ordered (OBS)

LCR[4]: TX and RX Parity Select

If the parity bit is enabled with LCR bit-3 set to a logic 1, LCR BIT-4 selects the even or odd parity format.

- Logic 0 = ODD Parity is generated by forcing an odd number of logic 1's in the transmitted character. The receiver must be programmed to check the same format (default).
- Logic 1 = EVEN Parity is generated by forcing an even number of logic 1's in the transmitted character. The receiver must be programmed to check the same format.

LCR[5]: TX and RX Parity Select

If the parity bit is enabled, LCR BIT-5 selects the forced parity format.

- LCR BIT-5 = logic 0, parity is not forced (default).
- LCR BIT-5 = logic 1 and LCR BIT-4 = logic 0, parity bit is forced to a logical 1 for the transmit and receive data.
- LCR BIT-5 = logic 1 and LCR BIT-4 = logic 1, parity bit is forced to a logical 0 for the transmit and receive data.

The product (or products) mentioned in this data sheet are no longer being manufactured and may not be ordered (OBS)

TABLE 10: PARITY SELECTION

LCR BIT-5	LCR BIT-4	LCR BIT-3	PARITY SELECTION
X	X	0	No parity
0	0	1	Odd parity
0	1	1	Even parity
1	0	1	Force parity to mark, HIGH
1	1	1	Forced parity to space, LOW

LCR[6]: Transmit Break Enable

When enabled, the Break control bit causes a break condition to be transmitted (the TX output is forced to a "space', logic 0, state). This condition remains, until disabled by setting LCR bit-6 to a logic 0.

- Logic 0 = No TX break condition. (default)
- Logic 1 = Forces the transmitter output (TX) to a "space", logic 0, for alerting the remote receiver of a line break condition.

LCR[7]: Baud Rate Divisors Enable

Baud rate generator divisor (DLL/DLM/DLD) enable.

- Logic 0 = Data registers are selected. (default)
- Logic 1 = Divisor latch registers are selected.

4.7 Modem Control Register (MCR) or General Purpose Outputs Control - Read/Write

The MCR register is used for controlling the serial/modem interface signals or general purpose inputs/outputs.

MCR[0]: DTR# Output

The DTR# pin is a modem control output. If the modem interface is not used, this output may be used as a general purpose output.

- Logic 0 = Force DTR# output HIGH (default).
- Logic 1 = Force DTR# output LOW.

MCR[1]: RTS# Output

The RTS# pin is a modem control output and may be used for automatic hardware flow control by enabled by EFR bit-6. If the modem interface is not used, this output may be used as a general purpose output.

- Logic 0 = Force RTS# output HIGH (default).
- Logic 1 = Force RTS# output LOW. It is required to start Auto RTS Flow Control.

MCR[2]: Reserved

OP1# is not available as an output pin on the M580. But it is available for use during Internal Loopback Mode. In the Loopback Mode, this bit is used to write the state of the modem RI# interface signal.

MCR[3]: INT Output Enable

Enable or disable INT outputs to become active or in three-state. This bit is also used to control the OP2# signal during internal loopback mode.

- Logic 0 = INT output disabled (three state) in the 16 mode (default). During internal loopback mode, OP2# is HIGH.
- Logic 1 = INT output enabled (active) in the 16 mode. During internal loopback mode, OP2# is LOW.

TABLE 11: INT OUTPUT MODES

MCR BIT-3	INT OUTPUT IN 16 MODE
0	Three-State
1	Active

The product (or products) mentioned in this data sheet are no longer being manufactured and may not be ordered (OBS)

MCR[4]: Internal Loopback Enable

- Logic 0 = Disable loopback mode (default).
- Logic 1 = Enable local loopback mode, see loopback section and Figure 15.

MCR[5]: Xon-Any Enable (requires EFR bit-4 = 1)

- Logic 0 = Disable Xon-Any function (for 16C550 compatibility, default).
- Logic 1 = Enable Xon-Any function. In this mode, any RX character received will resume transmit operation. The RX character will be loaded into the RX FIFO , unless the RX character is an Xon or Xoff character and the M580 is programmed to use the Xon/Xoff flow control.

MCR[6]: Infrared Encoder/Decoder Enable (requires EFR bit-4 = 1)

- Logic 0 = Enable the standard modem receive and transmit input/output interface. (Default)
- Logic 1 = Enable infrared IrDA receive and transmit inputs/outputs. The TX/RX output/input are routed to the infrared encoder/decoder. The data input and output levels conform to the IrDA infrared interface requirement. The RX FIFO may need to be flushed upon enable. While in this mode, the infrared TX output will be LOW during idle data conditions.

MCR[7]: Clock Prescaler Select (requires EFR bit-4 = 1)

- Logic 0 = Divide by one. The input clock from the crystal or external clock is fed directly to the Programmable Baud Rate Generator without further modification, i.e., divide by one (default).
- Logic 1 = Divide by four. The prescaler divides the input clock from the crystal or external clock by four and feeds it to the Programmable Baud Rate Generator, hence, data rates become one forth.

4.8 Line Status Register (LSR) - Read Only

This register provides the status of data transfers between the UART and the host. If IER bit-2 is enabled, LSR bit 1 will generate an interrupt immediately and LSR bits 2-4 will generate an interrupt when a character with an error is in the RHR.

LSR[0]: Receive Data Ready Indicator

- Logic 0 = No data in receive holding register or FIFO (default).
- Logic 1 = Data has been received and is saved in the receive holding register or FIFO.

LSR[1]: Receiver Overrun Flag

- Logic 0 = No overrun error (default).
- Logic 1 = Overrun error. A data overrun error condition occurred in the receive shift register. This happens when additional data arrives while the FIFO is full. In this case the previous data in the receive shift register is overwritten. Note that under this condition the data byte in the receive shift register is not transferred into the FIFO, therefore the data in the FIFO is not corrupted by the error.

LSR[2]: Receive Data Parity Error Tag

- Logic 0 = No parity error (default).
- Logic 1 = Parity error. The receive character in RHR does not have correct parity information and is suspect. This error is associated with the character available for reading in RHR.

LSR[3]: Receive Data Framing Error Tag

- Logic 0 = No framing error (default).
- Logic 1 = Framing error. The receive character did not have a valid stop bit(s). This error is associated with the character available for reading in RHR.

LSR[4]: Receive Break Tag

- Logic 0 = No break condition (default).
- Logic 1 = The receiver received a break signal (RX was LOW for at least one character frame time). In the FIFO mode, only one break character is loaded into the FIFO. The break indication remains until the RX input returns to the idle condition, “mark” or HIGH.

LSR[5]: Transmit Holding Register Empty Flag

This bit is the Transmit Holding Register Empty indicator. The THR bit is set to a logic 1 when the last data byte is transferred from the transmit holding register to the transmit shift register. The bit is reset to logic 0 concurrently with the data loading to the transmit holding register by the host. In the FIFO mode this bit is set when the transmit FIFO is empty, it is cleared when the transmit FIFO contains at least 1 byte.

LSR[6]: THR and TSR Empty Flag

This bit is set to a logic 1 whenever the transmitter goes idle. It is set to logic 0 whenever either the THR or TSR contains a data character. In the FIFO mode this bit is set to a logic 1 whenever the transmit FIFO and transmit shift register are both empty.

LSR[7]: Receive FIFO Data Error Flag

- Logic 0 = No FIFO error (default).
- Logic 1 = A global indicator for the sum of all error bits in the RX FIFO. At least one parity error, framing error or break indication is in the FIFO data. This bit clears when there is no more error(s) in any of the bytes in the RX FIFO.

The product(s) mentioned in this data sheet are no longer being manufactured and may not be ordered (OBS)

4.9 Modem Status Register (MSR) - Read Only

This register provides the current state of the modem interface input signals. Lower four bits of this register are used to indicate the changed information. These bits are set to a logic 1 whenever a signal from the modem changes state. These bits may be used for general purpose inputs when they are not used with modem signals. Reading the higher four bits shows the status of the modem signals.

MSR[0]: Delta CTS# Input Flag

- Logic 0 = No change on CTS# input (default).
- Logic 1 = The CTS# input has changed state since the last time it was monitored. A modem status interrupt will be generated if MSR interrupt is enabled (IER bit-3).

MSR[1]: Delta DSR# Input Flag

- Logic 0 = No change on DSR# input (default).
- Logic 1 = The DSR# input has changed state since the last time it was monitored. A modem status interrupt will be generated if MSR interrupt is enabled (IER bit-3).

MSR[2]: Delta RI# Input Flag

- Logic 0 = No change on RI# input (default).
- Logic 1 = The RI# input has changed from LOW to HIGH, ending of the ringing signal. A modem status interrupt will be generated if MSR interrupt is enabled (IER bit-3).

MSR[3]: Delta CD# Input Flag

- Logic 0 = No change on CD# input (default).
- Logic 1 = Indicates that the CD# input has changed state since the last time it was monitored. A modem status interrupt will be generated if MSR interrupt is enabled (IER bit-3).

MSR[4]: CTS Input Status

CTS# pin may function as automatic hardware flow control signal input if it is enabled and selected by Auto CTS (EFR bit-7). Auto CTS Flow Control allows starting and stopping of local data transmissions based on the modem CTS# signal. A HIGH on the CTS# pin will stop UART transmitter as soon as the current character has finished transmission, and a LOW will resume data transmission. Normally MSR bit-4 bit is the complement of the CTS# input. However in the loopback mode, this bit is equivalent to the RTS# bit in the MCR register. The CTS# input may be used as a general purpose input when the modem interface is not used.

MSR[5]: DSR Input Status

Normally this bit is the complement of the DSR# input. In the loopback mode, this bit is equivalent to the DTR# bit in the MCR register. The DSR# input may be used as a general purpose input when the modem interface is not used.

MSR[6]: RI Input Status

Normally this bit is the complement of the RI# input. In the loopback mode this bit is equivalent to bit-2 in the MCR register. The RI# input may be used as a general purpose input when the modem interface is not used.

MSR[7]: CD Input Status

Normally this bit is the complement of the CD# input. In the loopback mode this bit is equivalent to bit-3 in the MCR register. The CD# input may be used as a general purpose input when the modem interface is not used.

The product(s) mentioned in this datasheet are no longer being manufactured and may not be ordered (OBS)

4.10 Modem Status Register (MSR) - Write Only

This register provides the advanced features of XR16M580. Lower four bits of this register are reserved. Writing to the higher four bits enables additional functions.

MSR[3:0]: Reserved

MSR[4]: Enable/Disable Transmitter (Requires EFR[4] = 1)

- Logic 0 = Enable Transmitter (default).
- Logic 1 = Disable Transmitter.

MSR[5]: Enable/Disable Receiver (Requires EFR[4] = 1)

- Logic 0 = Enable Receiver (default).
- Logic 1 = Disable Receiver.

MSR[6]: Enable/Disable 9-bit mode (Requires EFR[4] = 1)

For the 9-bit mode information, **See "Section 2.15, Normal Multidrop Mode" on page 19.**

- Logic 0 = Normal 8-bit mode (default).
- Logic 1 = Enable 9-bit or Multidrop mode.

MSR[7]: Enable/Disable fast IR mode (Requires EFR[4] = 1)

The M580 supports the new fast IR transmission with data rate up to 1.152 Mbps.

- Logic 0 = IrDA version 1.0, 3/16 pulse ratio, data rate up to 115.2 Kbps (default).
- Logic 1 = IrDA version 1.1, 1/4 pulse ratio, data rate up to 1.152 Mbps. For more IR mode information, please **See "Section 2.16, Infrared Mode" on page 20.**

4.11 Scratch Pad Register (SPR) - Read/Write

This is a 8-bit general purpose register for the user to store temporary data. The content of this register is preserved during sleep mode but becomes 0xFF (default) after a reset or a power off-on cycle.

The product (or products) mentioned in this data sheet are no longer being manufactured and may not be ordered (OBS)

4.12 Enhanced Mode Select Register (EMSR) - Write-only

This register replaces SPR (during a Write) and is accessible only when FCTR[6] = 1.

EMSR[1:0]: Receive/Transmit FIFO Level Count

When Scratchpad Swap (FCTR[6]) is asserted, EMSR bits 1-0 controls what mode the FIFO Level Counter is operating in.

TABLE 12: SCRATCHPAD SWAP SELECTION

FCTR[6]	EMSR[1]	EMSR[0]	Scratchpad is
0	X	X	Scratchpad
1	X	0	RX FIFO Level Counter Mode
1	0	1	TX FIFO Level Counter Mode
1	1	1	Alternate RX/TX FIFO Counter Mode

During Alternate RX/TX FIFO Level Counter Mode, the first value read after EMSR bits 1-0 have been asserted will always be the RX FIFO Level Counter. The second value read will correspond with the TX FIFO Level Counter. The next value will be the RX FIFO Level Counter again, then the TX FIFO Level Counter and so on and so forth.

The product (or products) mentioned in this data sheet are no longer being manufactured and may not be ordered (OBS)

EMSR[2]: Send TX Immediately

- Logic 0 = Do not send TX immediately (default).
- Logic 1 = Send TX immediately. When FIFO is enabled and this bit is set, the next data will be written to the TX shift register. Thus, the data will be sent out immediately instead of queuing in the FIFO. Every time, only 1 byte will be send out. Once this byte has been sent out, the EMSR[2] will go back to 0 automatically. If more than 1 byte will be sent out, EMSR[2] needs to be set to 1 for each byte.

EMSR[3]: Invert RTS in RS485 mode

- Logic 0 = RTS# output is a logic 0 during TX and a logic 1 during RX (default).
- Logic 1 = RTS# output is a logic 1 during TX and a logic 0 during RX.

EMSR[5:4]: Reserved

EMSR[6]: LSR Interrupt Mode

- Logic 0 = LSR Interrupt Delayed (default). LSR bits 2, 3, and 4 will generate an interrupt when the character with the error is in the RHR.
- Logic 1 = LSR Interrupt Immediate. LSR bits 2, 3, and 4 will generate an interrupt as soon as the character is received into the FIFO.

EMSR[7]: Xoff/Special character Interrupt Mode Select

This bit selects how the Xoff and Special character interrupt is cleared. The XON interrupt can only be cleared by reading the ISR register.

- Logic 0 = Xoff interrupt is cleared by either reading ISR register or when an XON character is received. Special character interrupt is cleared by either reading ISR register or when next character is received. (default).
- Logic 1 = Xoff/Special character interrupt can only be cleared by reading the ISR register.

4.13 Baud Rate Generator Registers (DLL, DLM and DLD) - Read/Write

These registers make-up the value of the baud rate divisor. The M580 has different DLL, DLM and DLD for transmitter and receiver. It provides more convenience for the transmitter and receiver to transmit data with different rate. The M580 uses DLD[7:6] to select TX or RX. Then it provides DLD[5:0] to select the sampling frequency and fractional baud rate divisor. The concatenation of the contents of DLM and DLL gives the 16-bit divisor value. The value is added to DLD[3:0]/16 to achieve the fractional baud rate divisor. DLD must be enabled via EFR bit-4 before it can be accessed. See **Table 13** below and **See "Section 2.7, Programmable Baud Rate Generator with Fractional Divisor" on page 12.**

DLD[5:4]: Sampling Rate Select

These bits select the data sampling rate. By default, the data sampling rate is 16X. The maximum data rate will double if the 8X mode is selected and will quadruple if the 4X mode is selected. See **Table 13** below.

TABLE 13: SAMPLING RATE SELECT

DLD[5]	DLD[4]	SAMPLING RATE
0	0	16X
0	1	8X
1	X	4X

The product (or products) mentioned in this data sheet are no longer being manufactured and may not be ordered (OBS)

DLD[6]: Independent BRG enable

- Logic 0 = The Transmitter and Receiver uses the same Baud Rate Generator. (default).
- Logic 1 = The Transmitter and Receiver uses different Baud Rate Generators. Use DLD[7] for selecting which baud rate generator to configure.

DLD[7]: BRG select

When DLD[6] = 1, this bit selects whether the values written to DLL, DLM and DLD[5:0] will be for the Transmit Baud Rate Generator or the Receive Baud Rate Generator. When DLD[6] = 0 (same Baud Rate Generator used for both TX and RX), this bit must be a logic 0 to properly write to the appropriate DLL, DLM and DLD[5:0]. .

TABLE 14: BRG SELECT

DLD[7]	DLD[6]	BRG
0	0	Transmitter and Receiver uses same BRG. Writing to DLL, DLM and DLD[5:0] configures the BRG for both the TX and RX.
0	1	Transmitter and Receiver uses different BRGs. Writing to DLL, DLM and DLD[5:0] configures the BRG for TX.
1	1	Transmitter and Receiver uses different BRGs. Writing to DLL, DLM and DLD[5:0] configures the BRG for RX.
1	0	Transmitter and Receiver uses same BRG. Writing to DLL, DLM and DLD[5:0] has no effect on BRG used by the TX and RX.

4.14 RX/TX FIFO Level Count Register (FC) - Read-Only

This register replaces SPR (during a read) and is accessible when FCTR[6] = 1. This register is also accessible when LCR = 0xBF. It is suggested to read the FIFO Level Count Register at the Scratchpad Register location when FCTR bit-6 = 1. See **Table 12**.

FC[7:0]: RX/TX FIFO Level Count

Receive/Transmit FIFO Level Count. Number of characters in Receiver FIFO (FCTR[7] = 0) or Transmitter FIFO (FCTR[7] = 1) can be read via this register. Reading this register is not recommended when transmitting or receiving data.

4.15 Feature Control Register (FCTR) - Read/Write

FCTR[1:0]: Reserved

FCTR[2]: IrDa RX Inversion

- Logic 0 = Select RX input as encoded IrDa data (Idle state will be LOW).
- Logic 1 = Select RX input as inverted encoded IrDa data (Idle state will be HIGH).

FCTR[3]: Auto RS-485 Direction Control

- Logic 0 = Standard ST16C550 mode. Transmitter generates an interrupt when transmit holding register becomes empty and transmit shift register is shifting data out.
- Logic 1 = Enable Auto RS485 Direction Control function. The direction control signal, RTS# pin, changes its output logic state from LOW to HIGH one bit time after the last stop bit of the last character is shifted out. Also, the Transmit interrupt generation is delayed until the transmitter shift register becomes empty. The RTS# output pin will automatically return to a LOW when a data byte is loaded into the TX FIFO. However, RTS# behavior can be inverted by setting EMSR[3] = 1.

FCTR[5:4]: Reserved

FCTR[6]: Scratchpad Swap

- Logic 0 = Scratch Pad register is selected as general read and write register. ST16C550 compatible mode.
- Logic 1 = FIFO Count register (Read-Only), Enhanced Mode Select Register (Write-Only). Number of characters in transmit or receive FIFO can be read via scratch pad register when this bit is set. Enhanced Mode Select Register is selected when it is written into.

FCTR[7]: Programmable Trigger Register Select

- Logic 0 = Register FC selected for RX.
- Logic 1 = Register FC selected for TX.

The product (or products) mentioned in this data sheet are no longer being manufactured and may not be ordered (OBS)

4.16 Enhanced Feature Register (EFR) - Read/Write

Enhanced features are enabled or disabled using this register. Bit 0-3 provide single or dual consecutive character software flow control selection (see Table 15). When the Xon1 and Xon2 and Xoff1 and Xoff2 modes are selected, the double 8-bit words are concatenated into two sequential characters. Caution: note that whenever changing the TX or RX flow control bits, always reset all bits back to logic 0 (disable) before programming a new setting.

EFR[3:0]: Software Flow Control Select

Single character and dual sequential characters software flow control is supported. Combinations of software flow control can be selected by programming these bits.

TABLE 15: SOFTWARE FLOW CONTROL FUNCTIONS

EFR BIT-3 CONT-3	EFR BIT-2 CONT-2	EFR BIT-1 CONT-1	EFR BIT-0 CONT-0	TRANSMIT AND RECEIVE SOFTWARE FLOW CONTROL
0	0	0	0	No TX and RX flow control (default and reset)
0	0	X	X	No transmit flow control
1	0	X	X	Transmit Xon1, Xoff1
0	1	X	X	Transmit Xon2, Xoff2
1	1	X	X	Transmit Xon1 and Xon2, Xoff1 and Xoff2
X	X	0	0	No receive flow control
X	X	1	0	Receiver compares Xon1, Xoff1
X	X	0	1	Receiver compares Xon2, Xoff2
1	0	1	1	Transmit Xon1, Xoff1 Receiver compares Xon1 or Xon2, Xoff1 or Xoff2
0	1	1	1	Transmit Xon2, Xoff2 Receiver compares Xon1 or Xon2, Xoff1 or Xoff2
1	1	1	1	Transmit Xon1 and Xon2, Xoff1 and Xoff2, Receiver compares Xon1 and Xon2, Xoff1 and Xoff2
0	0	1	1	No transmit flow control, Receiver compares Xon1 and Xon2, Xoff1 and Xoff2

The product (or products) mentioned in this data sheet are no longer being manufactured and may not be ordered (OBS)

EFR[4]: Enhanced Function Bits Enable

Enhanced function control bit. This bit enables IER bits 4-7, ISR bits 4-5, FCR bits 3-5, MCR bits 5-7, and DLD to be modified. After modifying any enhanced bits, EFR bit-4 can be set to a logic 0 to latch the new values. This feature prevents legacy software from altering or overwriting the enhanced functions once set. Normally, it is recommended to leave it enabled, logic 1.

- Logic 0 = modification disable/latch enhanced features. IER bits 4-7, ISR bits 4-5, FCR bits 3-5, MCR bits 5-7, and DLD are saved to retain the user settings. After a reset, the IER bits 4-7, ISR bits 4-5, FCR bits 3-5, and MCR bits 5-7, and DLD are set to a logic 0 to be compatible with ST16C550 mode (default).
- Logic 1 = Enables the EFR[3:0] register bits to be modified by the user.

EFR[5]: Special Character Detect Enable

- Logic 0 = Special Character Detect Disabled (default).
- Logic 1 = Special Character Detect Enabled. The UART compares each incoming receive character with data in Xoff-2 register. If a match exists, the receive data will be transferred to FIFO and ISR bit-4 will be set to indicate detection of the special character. Bit-0 corresponds with the LSB bit of the receive character. If flow control is set for comparing Xon1, Xoff1 (EFR [1:0]= '10') then flow control and special character work normally. However, if flow control is set for comparing Xon2, Xoff2 (EFR[1:0]= '01') then flow control works normally, but Xoff2 will not go to the FIFO, and will generate an Xoff interrupt and a special character interrupt, if enabled via IER bit-5.

EFR[6]: Auto RTS Flow Control Enable

RTS# output may be used for hardware flow control by setting EFR bit-6 to logic 1. When Auto RTS is selected, an interrupt will be generated when the receive FIFO is filled to the selected trigger level and RTS de-asserts HIGH at the next upper trigger level/hysteresis level. RTS# will return LOW when FIFO data falls below the next lower trigger level/hysteresis level. The RTS# output must be asserted (LOW) before the auto RTS can take effect. RTS# pin will function as a general purpose output when hardware flow control is disabled.

- Logic 0 = Automatic RTS flow control is disabled (default).
- Logic 1 = Enable Automatic RTS flow control.

EFR[7]: Auto CTS Flow Control Enable

Automatic CTS Flow Control.

- Logic 0 = Automatic CTS flow control is disabled (default).
- Logic 1 = Enable Automatic CTS flow control. Data transmission stops when CTS# input de-asserts to logic 1. Data transmission resumes when CTS# returns to a logic 0.

4.17 Software Flow Control Registers (XOFF1, XOFF2, XON1, XON2) - Read/Write

These registers are used as the programmable software flow control characters xoff1, xoff2, xon1, and xon2. For more details, see **Table 5**. The xoff2 is also used as auto address detect register when the auto 9-bit mode enabled. **See "Section 2.15.1, Auto Address Detection" on page 20.**

The product (or product(s) mentioned in this data sheet are no longer being manufactured and may not be ordered (OBS)

TABLE 16: UART RESET CONDITIONS

REGISTERS	RESET STATE
DLM, DLL (Both TX and RX)	DLM = 0x00 and DLL = 0x01. Only resets to these values during a power up. They do not reset when the Reset Pin is asserted.
DLD	Bits 7-0 = 0x00
RHR	Bits 7-0 = 0xXX
THR	Bits 7-0 = 0xXX
IER	Bits 7-0 = 0x00
FCR	Bits 7-0 = 0x00
ISR	Bits 7-0 = 0x01
LCR	Bits 7-0 = 0x00
MCR	Bits 7-0 = 0x00
LSR	Bits 7-0 = 0x60
MSR	Bits 7-0 =0xX0 (Read-only) Bits 7-4 = 0000 (Write-only)
SPR	Bits 7-0 = 0xFF
EMSR	Bits 7-0 = 0x00
FC	Bits 7-0 = 0x00
FCTR	Bits 7-0 = 0x00
EFR	Bits 7-0 = 0x00
XON1	Bits 7-0 = 0x00
XON2	Bits 7-0 = 0x00
XOFF1	Bits 7-0 = 0x00
XOFF2	Bits 7-0 = 0x00
I/O SIGNALS	**RESET STATE**
TX	HIGH
RTS#	HIGH
DTR#	HIGH
INT (16 Mode)	Three-State Condition
IRQ# (68 Mode)	HIGH

The product (or products) mentioned in this data sheet are no longer being manufactured and may not be ordered (OBS)

ABSOLUTE MAXIMUM RATINGS

Power Supply Range	3.6 Volts
Voltage at Any Pin	GND-0.3 V to 3.6 V
Operating Temperature	-40° to +85°C
Storage Temperature	-65° to +150°C
Package Dissipation	500 mW

TYPICAL PACKAGE THERMAL RESISTANCE DATA (MARGIN OF ERROR: ± 15%)

Thermal Resistance (32-QFN)	theta-ja = 28°C/W, theta-jc = 10.5°C/W
Thermal Resistance (48-TQFP)	theta-ja = 49°C/W, theta-jc = 10°C/W
Thermal Resistance (25-BGA)	theta-ja = 166°C/W, theta-jc = 98.2°C/W

The product (or products) mentioned in this data sheet are no longer being manufactured and may not be ordered (OBS)

ELECTRICAL CHARACTERISTICS

DC ELECTRICAL CHARACTERISTICS

UNLESS OTHERWISE NOTED: TA = -40° TO +85°C, VCC IS 1.62 TO 3.63V

SYMBOL	PARAMETER	LIMITS 1.8V MIN	LIMITS 1.8V MAX	LIMITS 2.5V MIN	LIMITS 2.5V MAX	LIMITS 3.3V MIN	LIMITS 3.3V MAX	UNITS	CONDITIONS
V_{ILCK}	Clock Input Low Level	-0.3	0.3	-0.3	0.4	-0.3	0.6	V	
V_{IHCK}	Clock Input High Level	1.4	VCC	2.0	VCC	2.4	VCC	V	
V_{IL}	Input Low Voltage	-0.3	0.2	-0.3	0.5	-0.3	0.7	V	
V_{IH}	Input High Voltage	1.4	VCC	1.8	VCC	2.0	VCC	V	
V_{OL}	Output Low Voltage		0.4		0.4		0.4	V V V	I_{OL} = 6 mA I_{OL} = 4 mA I_{OL} = 1.5 mA
V_{OH}	Output High Voltage	1.4		1.8		2.0		V V	I_{OH} = -4 mA I_{OH} = -2 mA I_{OH} = -200 uA
I_{IL}	Input Low Leakage Current		±15		±15		±15	uA	
I_{IH}	Input High Leakage Current		±15		±15		±15	uA	
C_{IN}	Input Pin Capacitance		5		5		5	pF	
I_{CC}	Power Supply Current		1.5		2		2.5	mA	Ext Clk = 5MHz
I_{SLEEP}/ I_{PWRSV}	Sleep / Power Save Current (16 and 68 modes)		3		6		15	uA	See Test 1

Test 1: The following inputs remain steady at VCC or GND state to minimize Sleep current: A0-A2, D0-D7, IOR#, IOW#, CS#. Also, RX input must idle at HIGH while asleep.

For Power-Save, the UART internally isolates all of these inputs (except the modem inputs, 16/68# and Reset pins) therefore eliminating any unnecessary external buffers to keep the inputs steady. SEE"POWER-SAVE FEATURE" ON

PAGE 22. To achieve minimum power drain, the voltage at any of the inputs of the M580M580 should NOT be lower than its VCC supply.

AC ELECTRICAL CHARACTERISTICS

TA = -40° TO +85°C, VCC IS 1.62 TO 3.6V, 70 PF LOAD WHERE APPLICABLE

SYMBOL	PARAMETER	LIMITS 1.8V ± 10%		LIMITS 2.5V ± 10%		LIMITS 3.3V ± 10%		UNIT
		MIN	MAX	MIN	MAX	MIN	MAX	
XTAL1	UART Crystal Frequency		24		24		24	MHz
ECLK	External Clock Frequency		30		50		64	MHz
T_{ECLK}	External Clock Time Period	15		9		7		ns
T_{AS}	Address Setup Time (16 Mode)	0		0		0		ns
T_{AH}	Address Hold Time (16 Mode)	0		0		0		ns
T_{CS}	Chip Select Width (16 Mode)	90		60		35		ns
T_{RD}	IOR# Strobe Width (16 Mode)	90		60		35		ns
T_{DY}	Read Cycle Delay (16 Mode)	90		60		35		ns
T_{RDV}	Data Access Time (16 Mode)		85		55		30	ns
T_{DD}	Data Disable Time (16 Mode)		25		10		5	ns
T_{WR}	IOW# Strobe Width (16 Mode)	90		60		35		ns
T_{DY}	Write Cycle Delay (16 Mode)	90		60		35		ns
T_{DS}	Data Setup Time (16 Mode)	30		15		10		ns
T_{DH}	Data Hold Time (16 Mode)	3		3		3		ns
T_{ADS}	Address Setup (68 Mode)	5		0		0		ns
T_{ADH}	Address Hold (68 Mode)	0		0		0		ns
T_{RWS}	R/W# Setup to CS# (68 Mode)	0		0		0		ns
T_{RDA}	Data Access Time (68 mode)		85		55		30	ns
T_{RDH}	Data Disable Time (68 mode)		15		15		15	ns
T_{WDS}	Write Data Setup (68 mode)	15		10		10		ns
T_{WDH}	Write Data Hold (68 Mode)	3		3		3		ns
T_{RWH}	CS# De-asserted to R/W# De-asserted (68 Mode)	3		3		3		ns
T_{CSL}	CS# Strobe Width (68 Mode)	90		60		35		ns
T_{CSD}	CS# Cycle Delay (68 Mode)	90		60		35		ns
T_{WDO}	Delay From IOW# To Output		50		50		50	ns

The product (or products) mentioned in this data sheet are no longer being manufactured and may not be ordered (OBS)

AC ELECTRICAL CHARACTERISTICS

TA = -40° TO +85°C, VCC IS 1.62 TO 3.6V, 70 PF LOAD WHERE APPLICABLE

SYMBOL	PARAMETER	LIMITS 1.8V ± 10% MIN	LIMITS 1.8V ± 10% MAX	LIMITS 2.5V ± 10% MIN	LIMITS 2.5V ± 10% MAX	LIMITS 3.3V ± 10% MIN	LIMITS 3.3V ± 10% MAX	UNIT
T_{MOD}	Delay To Set Interrupt From MODEM Input		50		50		50	ns
T_{RSI}	Delay To Reset Interrupt From IOR#		50		50		50	ns
T_{SSI}	Delay From Stop To Set Interrupt		1		1		1	Bclk
T_{RRI}	Delay From IOR# To Reset Interrupt		45		45		45	ns
T_{SI}	Delay From Start To Interrupt		45		45		45	ns
T_{INT}	Delay From Initial INT Reset To Transmit Start	8	24	8	24	8	24	Bclk
T_{WRI}	Delay From IOW# To Reset Interrupt		45		45		45	ns
T_{SSR}	Delay From Stop To Set RXRDY#		1		1		1	Bclk
T_{RR}	Delay From IOR# To Reset RXRDY#		45		45		45	ns
T_{WT}	Delay From IOW# To Set TXRDY#		45		45		45	ns
T_{SRT}	Delay From Center of Start To Reset TXRDY#		8		8		8	Bclk
T_{RST}	Reset Pulse Width	40		40		40		ns
Bclk	Baud Clock	16X or 8X or 4X of data rate						Hz

The Product (or products) mentioned in this data sheet are no longer being manufactured and may not be ordered (OBS)

FIGURE 16. CLOCK TIMING

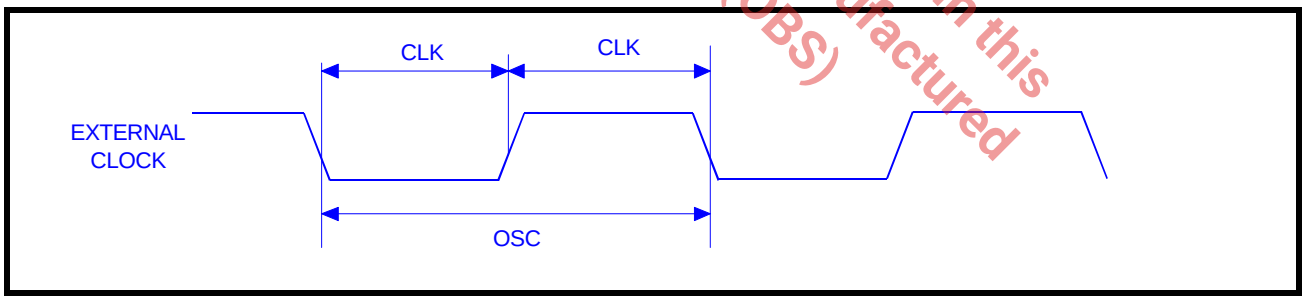

FIGURE 17. MODEM INPUT/OUTPUT TIMING

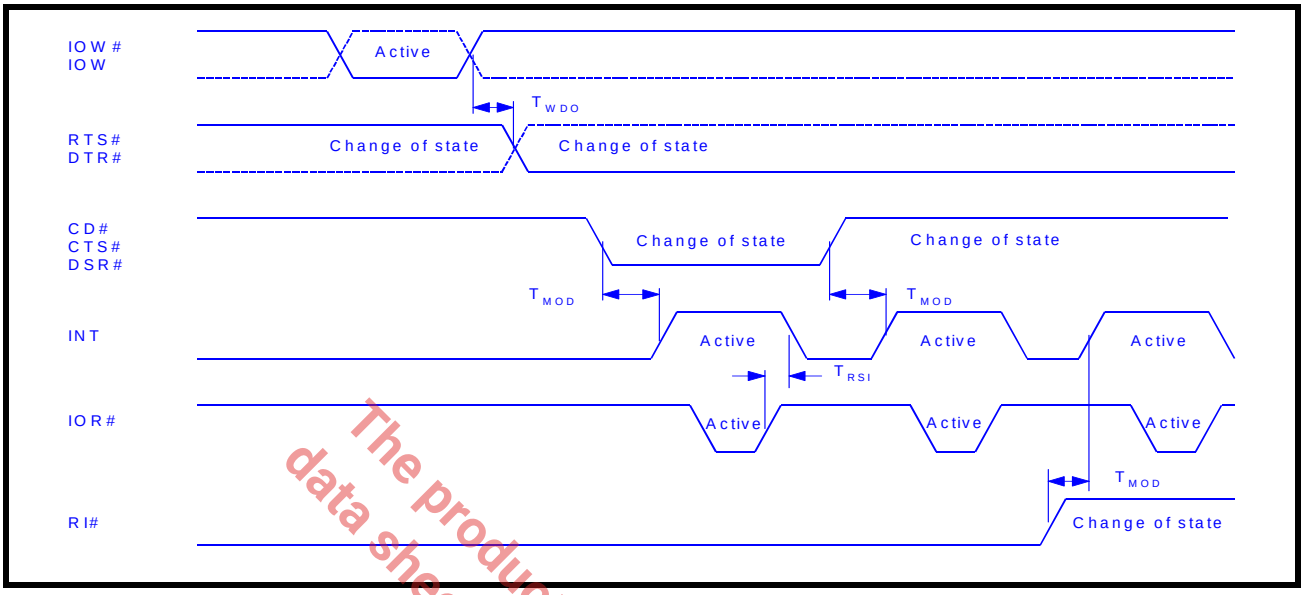

FIGURE 18. 16 MODE (INTEL) DATA BUS READ TIMING

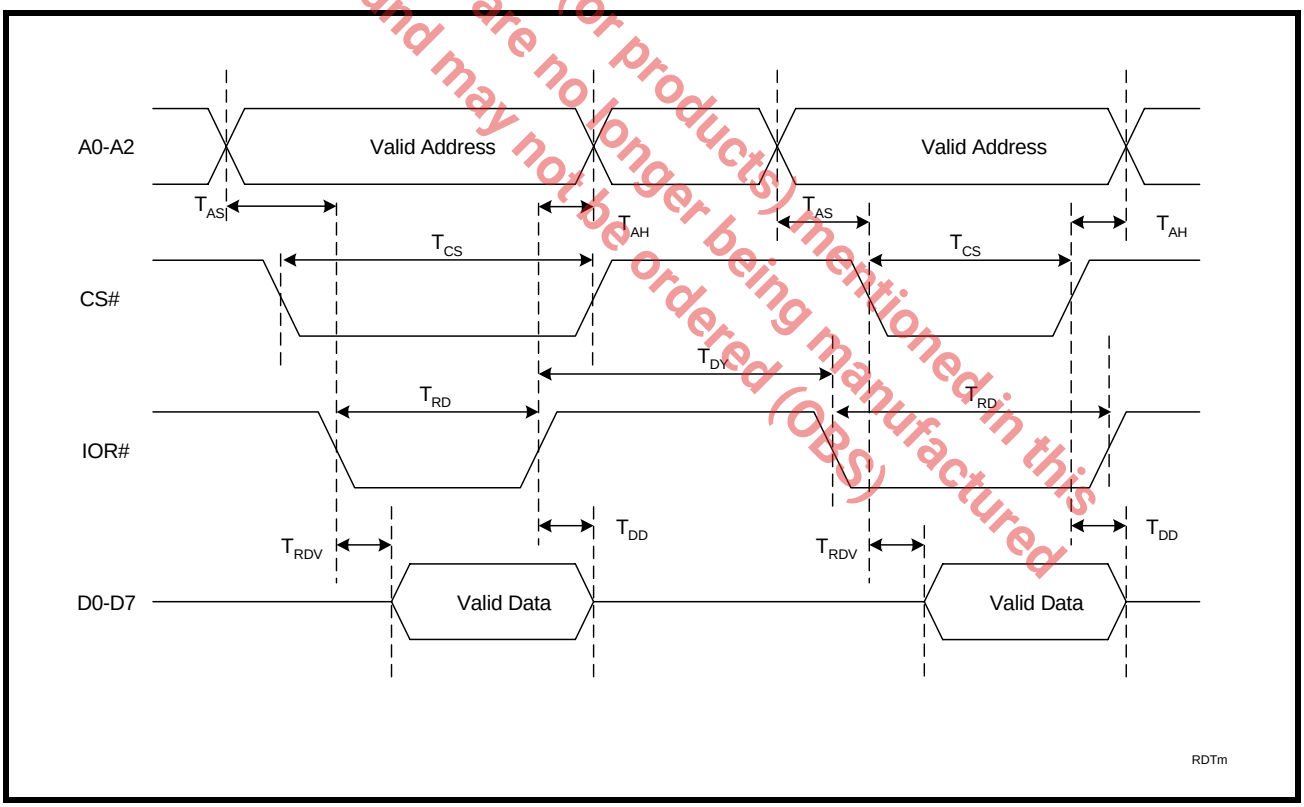

The product (or products) mentioned in this data sheet are no longer being manufactured and may not be ordered (OBS)

FIGURE 19. 16 MODE (INTEL) DATA BUS WRITE TIMING

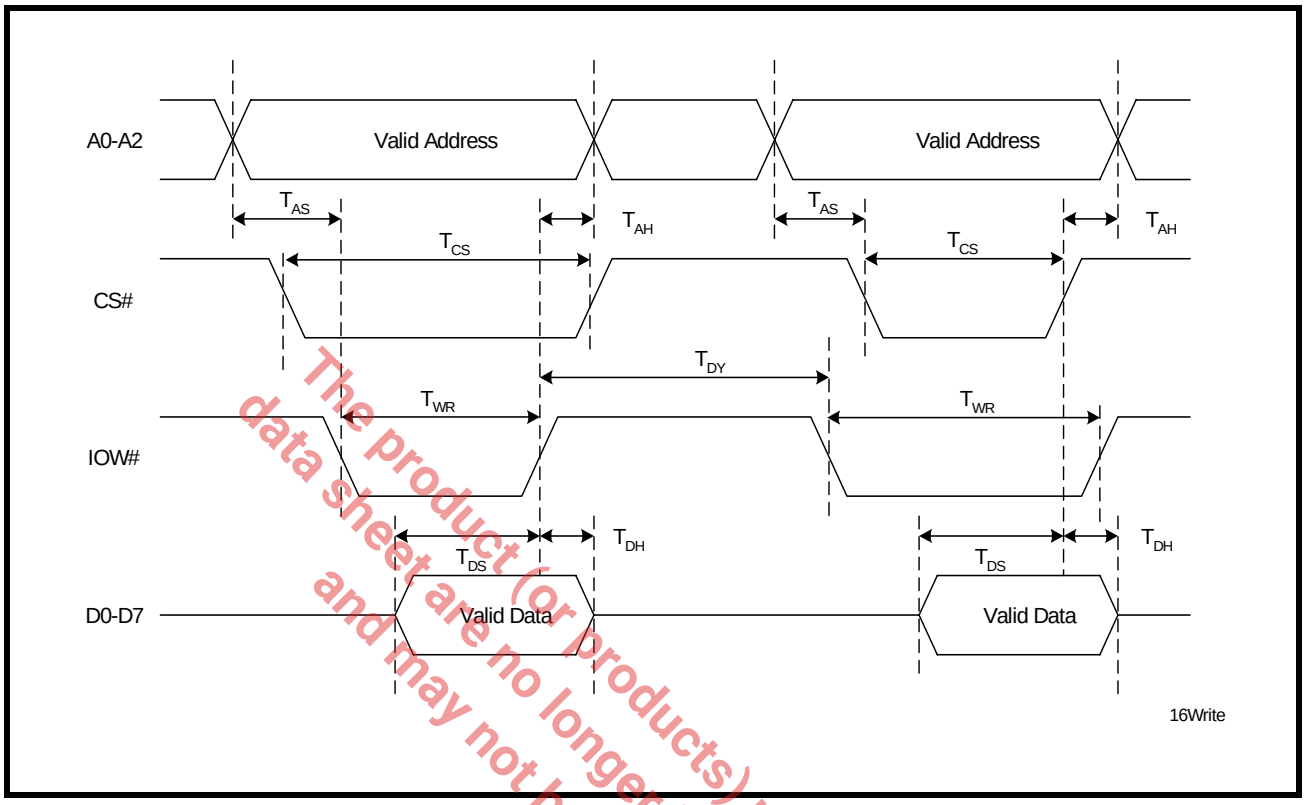

The product (or products) mentioned in this data sheet are no longer being manufactured and may not be ordered (OBS)

FIGURE 20. 68 MODE (MOTOROLA) DATA BUS READ TIMING

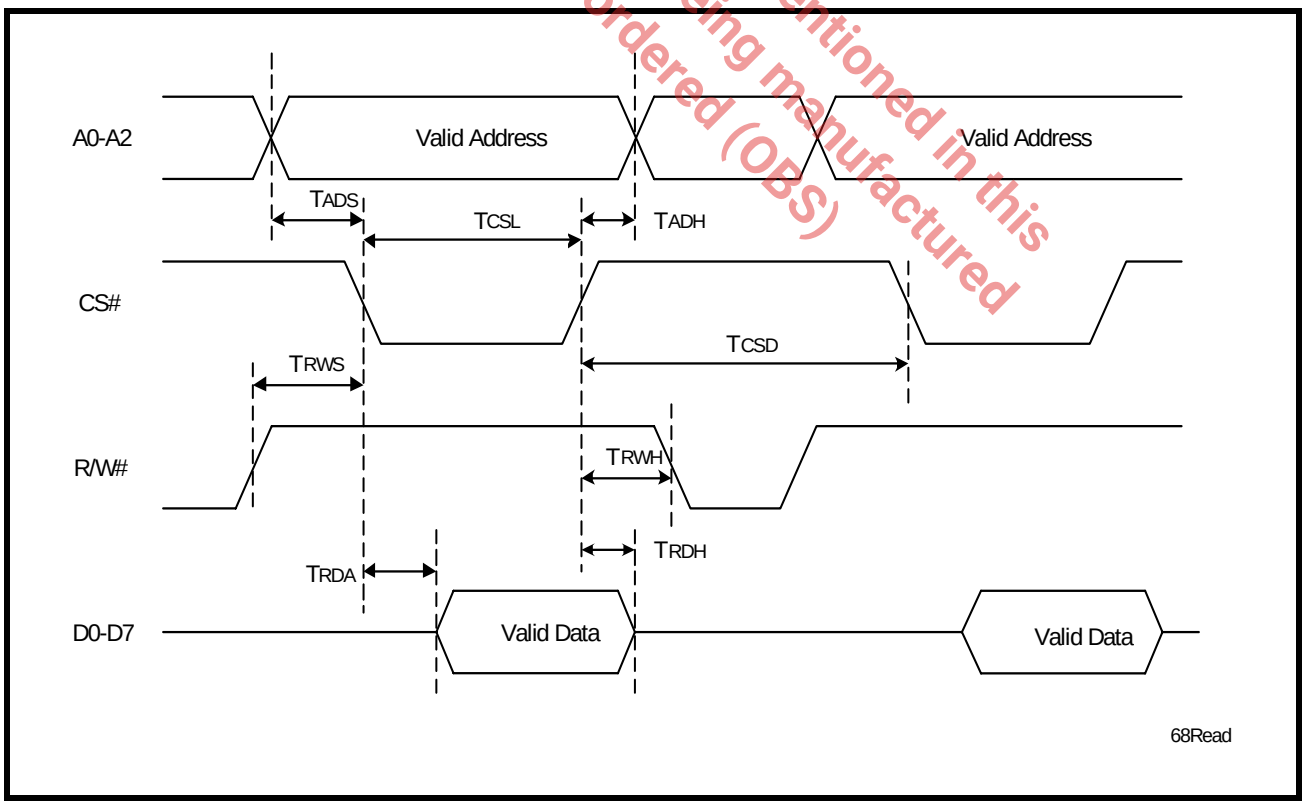

FIGURE 21. 68 MODE (MOTOROLA) DATA BUS WRITE TIMING

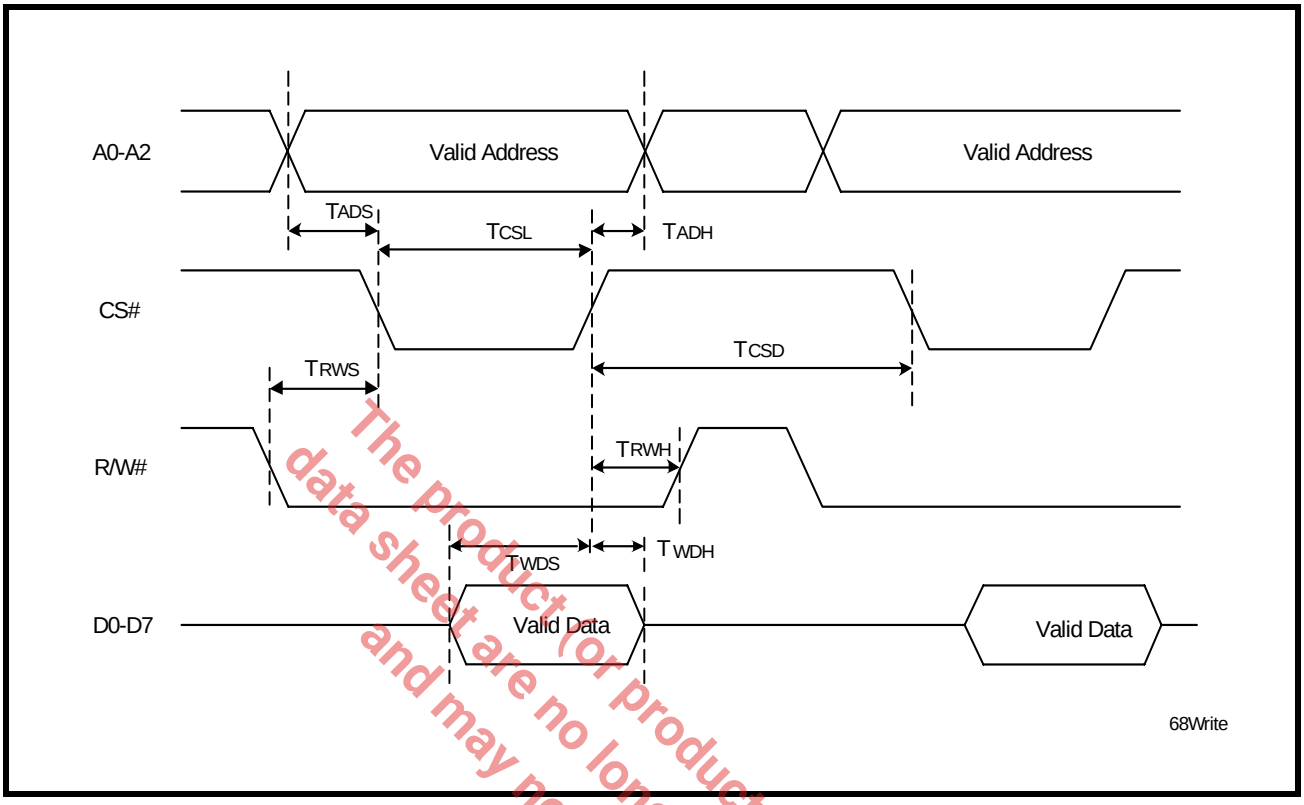

The product (or products) mentioned in this data sheet are no longer being manufactured and may not be ordered (OBS)

FIGURE 22. RECEIVE READY & INTERRUPT TIMING [NON-FIFO MODE]

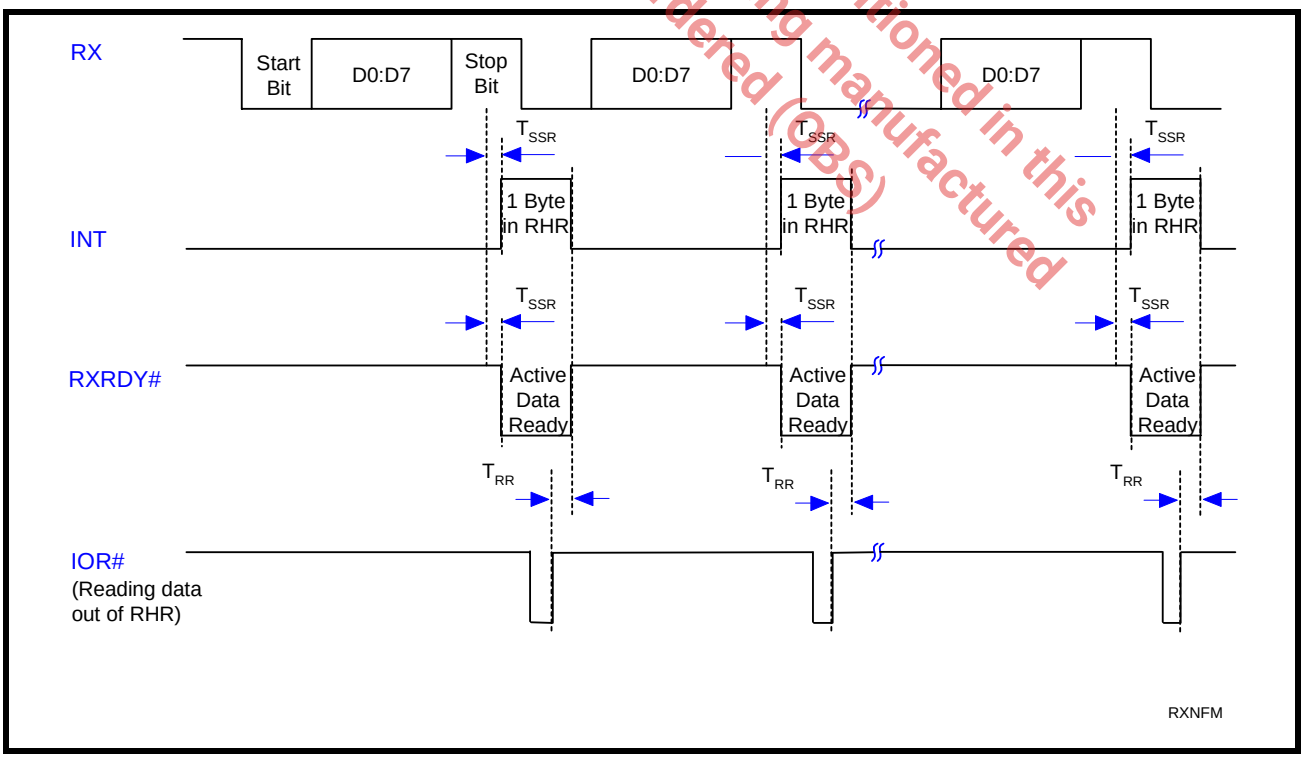

FIGURE 23. TRANSMIT READY & INTERRUPT TIMING [NON-FIFO MODE]

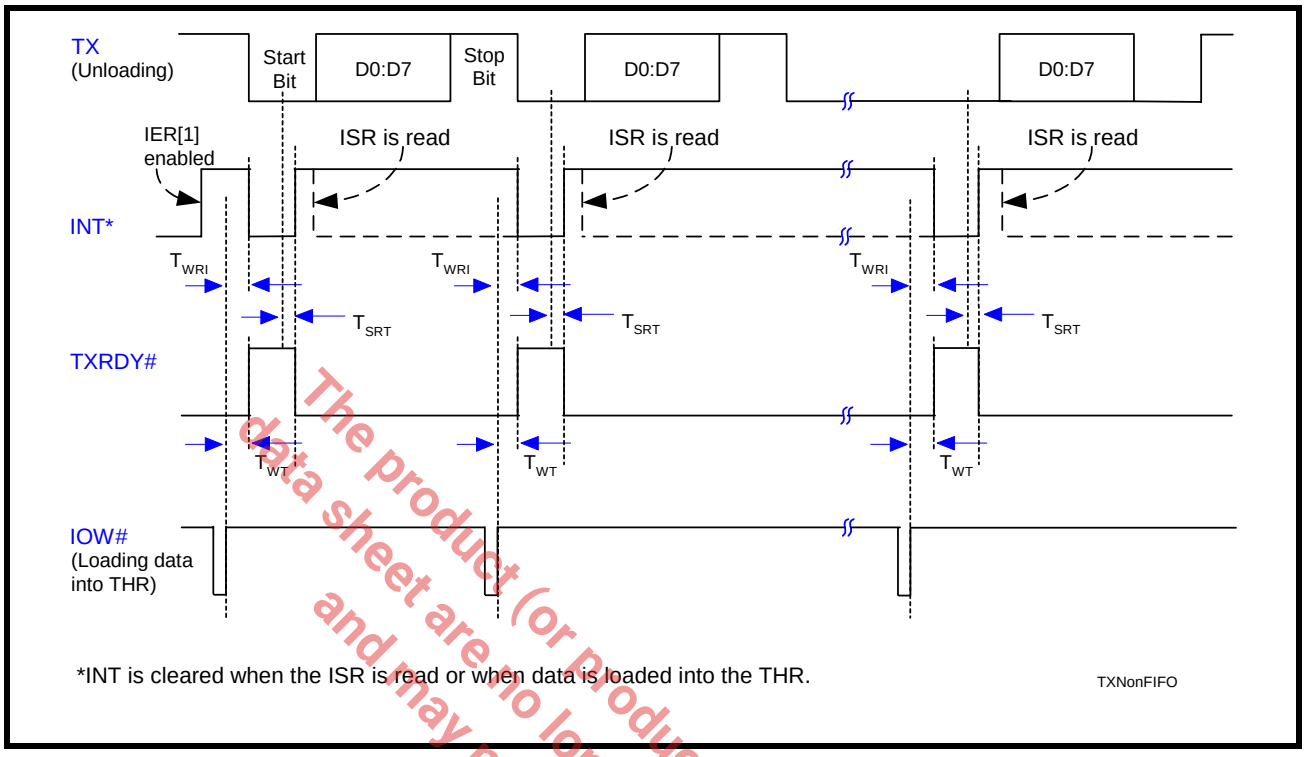

The product (or products) mentioned in this data sheet are no longer being manufactured and may not be ordered (OBS)

FIGURE 24. RECEIVE READY & INTERRUPT TIMING [FIFO MODE]

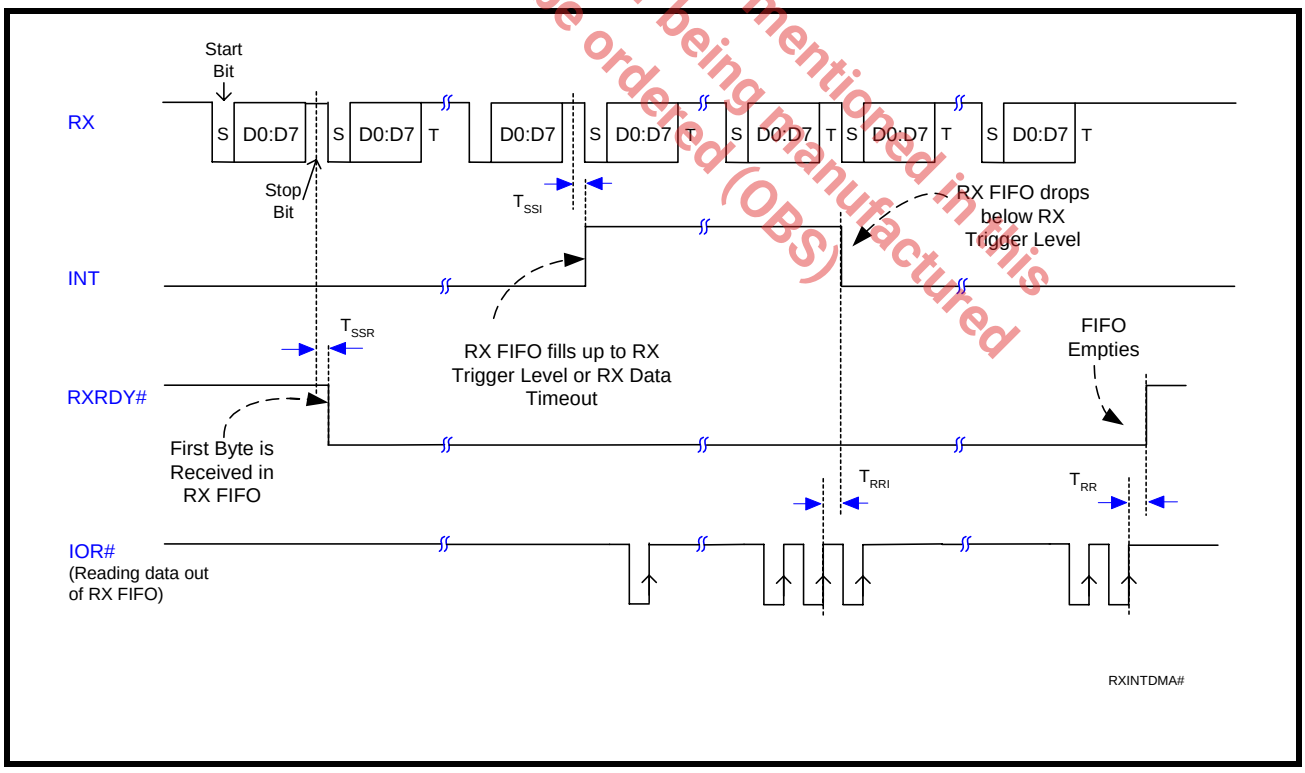

FIGURE 25. TRANSMIT READY & INTERRUPT TIMING [FIFO MODE]

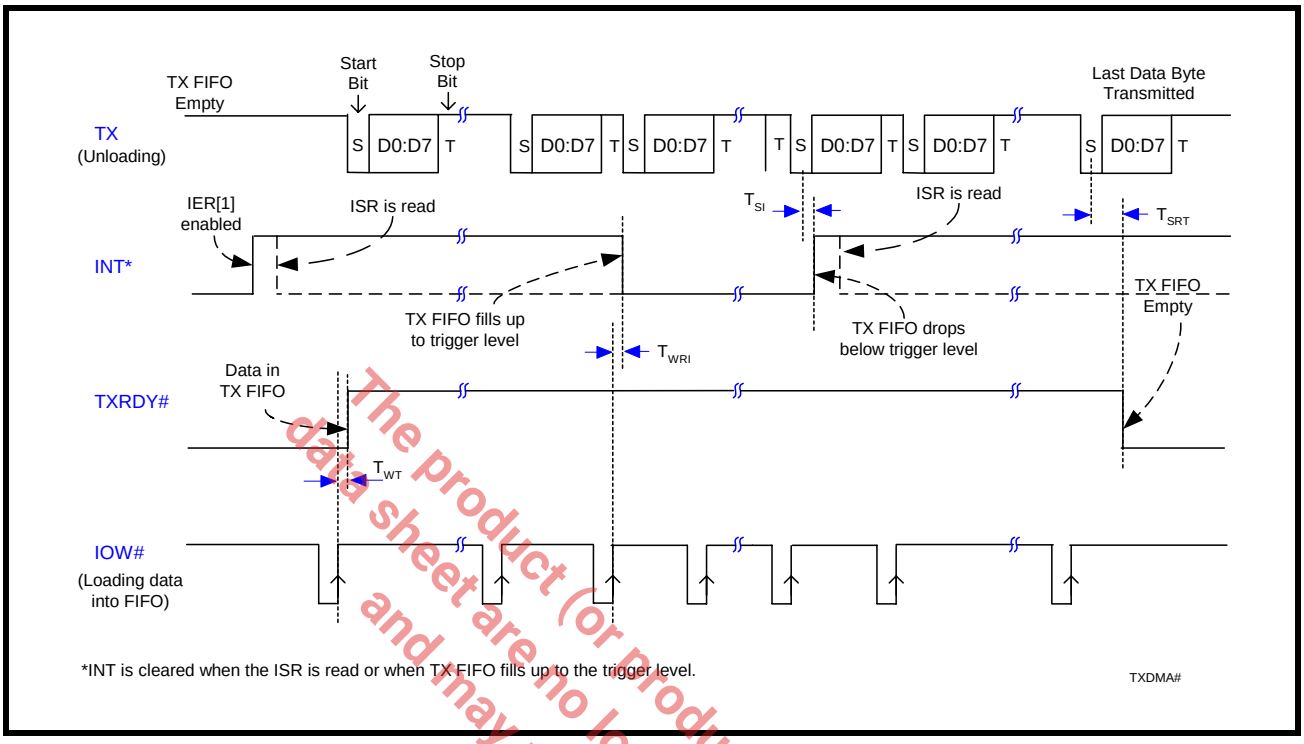

The product (or products) mentioned in this data sheet are no longer being manufactured and may not be ordered (OBS)

PACKAGE DIMENSIONS (32 PIN QFN - 5 X 5 X 0.9 mm)

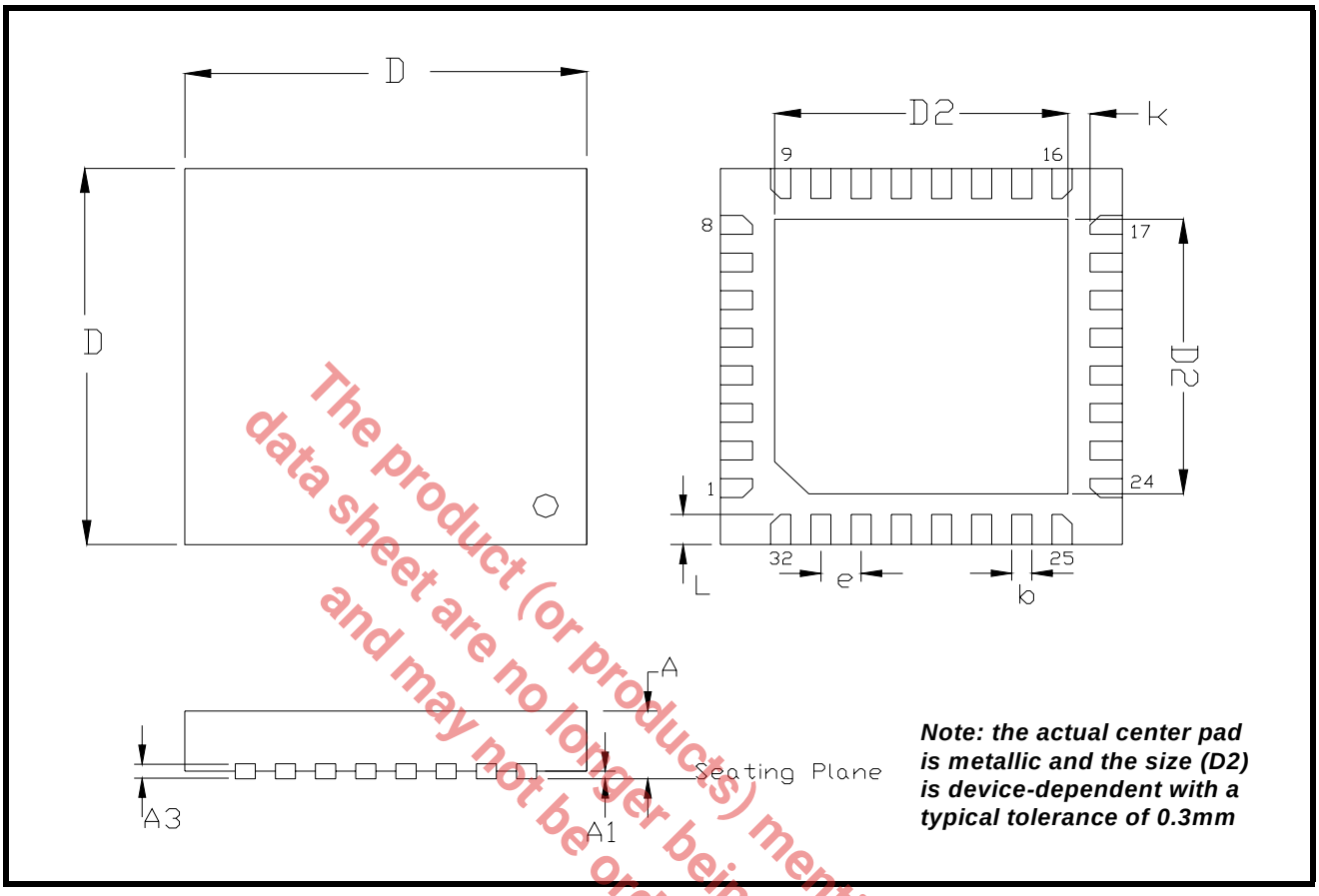

The product (or products) mentioned in this data sheet are no longer being manufactured and may not be ordered (OBS)

Note: The control dimension is in millimeter.

SYMBOL	INCHES		MILLIMETERS	
	MIN	MAX	MIN	MAX
A	0.031	0.039	0.80	1.00
A1	0.000	0.002	0.00	0.05
A3	0.006	0.010	0.15	0.25
D	0.193	0.201	4.90	5.10
D2	0.138	0.150	3.50	3.80
b	0.007	0.012	0.18	0.30
e	0.0197 BSC		0.50 BSC	
L	0.012	0.020	0.35	0.45
k	0.008	-	0.20	-

PACKAGE DIMENSIONS (48 PIN TQFP - 7 X 7 X 1 mm)

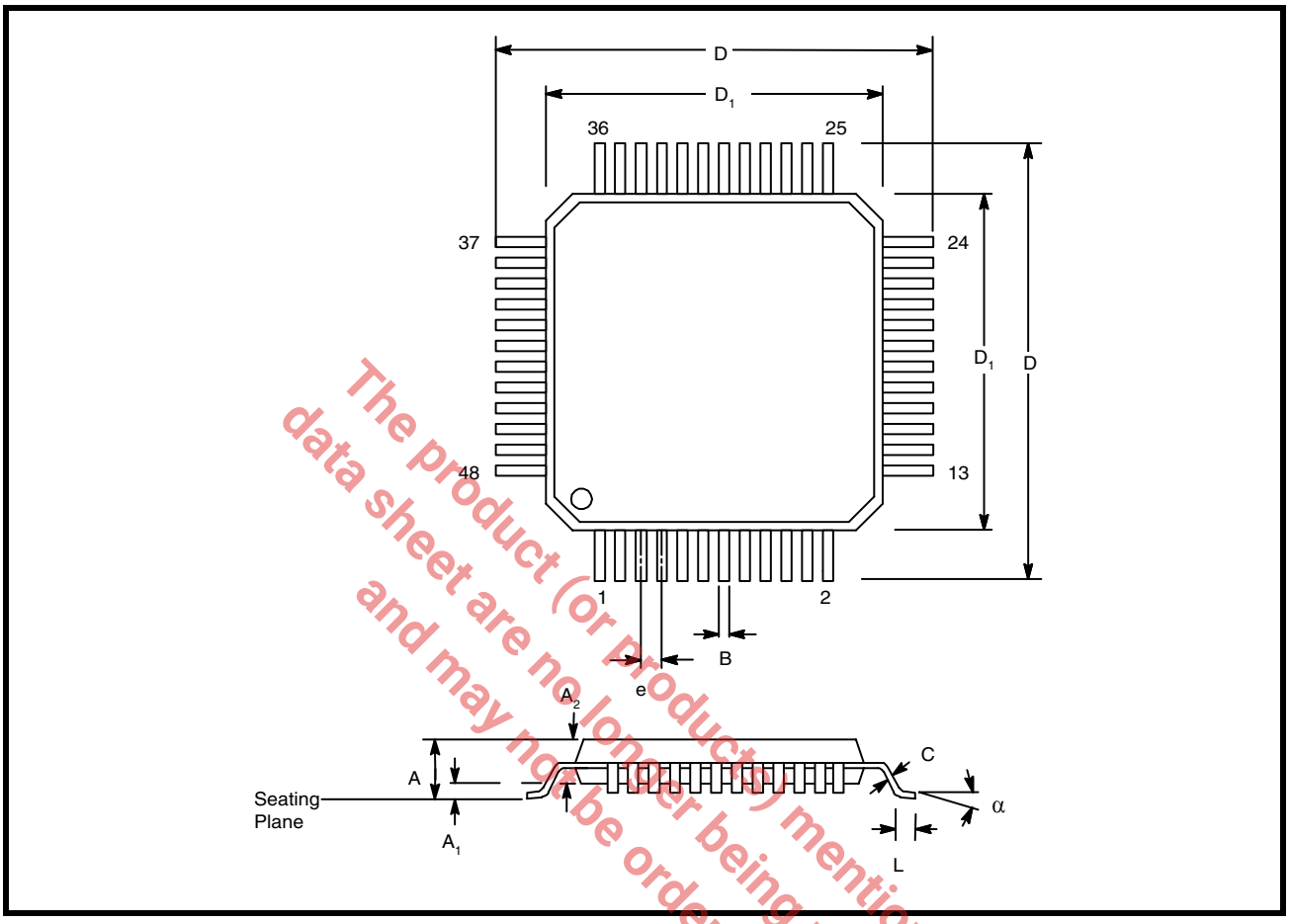

The product (or product(s) mentioned in this data sheet are no longer being manufactured and may not be ordered (OBS)

Note: The control dimension is the millimeter column

SYMBOL	INCHES		MILLIMETERS	
	MIN	MAX	MIN	MAX
A	0.039	0.047	1.00	1.20
A1	0.002	0.006	0.05	0.15
A2	0.037	0.041	0.95	1.05
B	0.007	0.011	0.17	0.27
C	0.004	0.008	0.09	0.20
D	0.346	0.362	8.80	9.20
D1	0.272	0.280	6.90	7.10
e	0.020 BSC		0.50 BSC	
L	0.018	0.030	0.45	0.75
a	0×	7×	0×	7×

PACKAGE DIMENSIONS (25 PIN BGA - 3 X 3 X 0.8 mm)

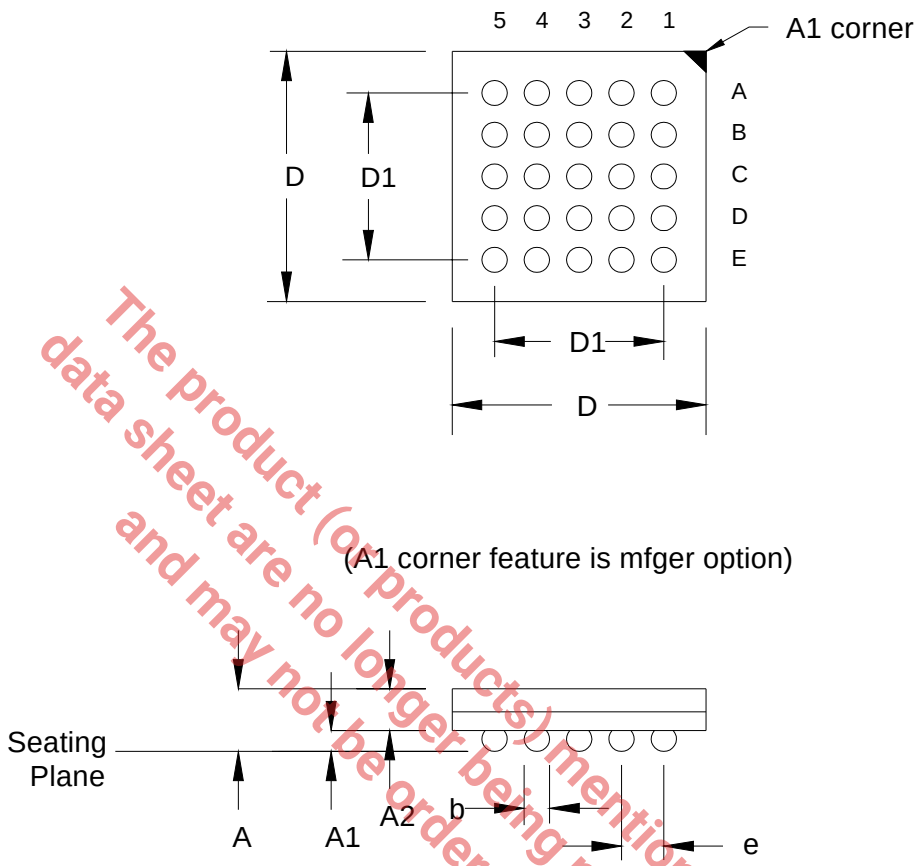

The product (or products) mentioned in this data sheet are no longer being manufactured and may not be ordered (OBS)

Note: The control dimension is the millimeter column

SYMBOL	INCHES		MILLIMETERS	
	MIN	MAX	MIN	MAX
A	0.028	0.031	0.70	0.80
A1	0.005	0.007	0.13	0.19
A2	0.022	0.024	0.57	0.61
D	0.114	0.122	2.90	3.10
D1	0.079 BSC		2.00 BSC	
b	0.008	0.012	0.20	0.30
e	0.020 BSC		0.50 BSC	

REVISION HISTORY

DATE	REVISION	DESCRIPTION
September 2008	Rev 1.0.0	Final Datasheet.

The product (or products) mentioned in this data sheet are no longer being manufactured and may not be ordered (OBS)

NOTICE

EXAR Corporation reserves the right to make changes to the products contained in this publication in order to improve design, performance or reliability. EXAR Corporation assumes no responsibility for the use of any circuits described herein, conveys no license under any patent or other right, and makes no representation that the circuits are free of patent infringement. Charts and schedules contained here in are only for illustration purposes and may vary depending upon a user's specific application. While the information in this publication has been carefully checked; no responsibility, however, is assumed for inaccuracies.

EXAR Corporation does not recommend the use of any of its products in life support applications where the failure or malfunction of the product can reasonably be expected to cause failure of the life support system or to significantly affect its safety or effectiveness. Products are not authorized for use in such applications unless EXAR Corporation receives, in writing, assurances to its satisfaction that: (a) the risk of injury or damage has been minimized; (b) the user assumes all such risks; (c) potential liability of EXAR Corporation is adequately protected under the circumstances.

Copyright 2008 EXAR Corporation

Datasheet September 2008.

Send your UART technical inquiry with technical details to hotline: uarttechsupport@exar.com.

Reproduction, in part or whole, without the prior written consent of EXAR Corporation is prohibited.

GENERAL DESCRIPTION 1
FEATURES 1
APPLICATIONS 1
FIGURE 1. XR16M580 BLOCK DIAGRAM 1
FIGURE 2. PIN OUT ASSIGNMENT FOR 32-PIN QFN AND 48-PIN TQFP PACKAGES IN 16 AND 68 MODE 2
FIGURE 3. PIN OUT ASSIGNMENT FOR 25-PIN BGA PACKAGE 3
ORDERING INFORMATION 3
PIN DESCRIPTIONS 4
1.0 PRODUCT DESCRIPTION 6
2.0 FUNCTIONAL DESCRIPTIONS 7
2.1 CPU INTERFACE 7
FIGURE 4. XR16M580 TYPICAL INTEL/MOTOROLA DATA BUS INTERCONNECTIONS 7
2.2 SERIAL INTERFACE 8
FIGURE 5. XR16M580 TYPICAL SERIAL INTERFACE CONNECTIONS 8
FIGURE 6. XR16M580 TYPICAL SERIAL INTERFACE CONNECTIONS 9
2.3 DEVICE RESET 10
2.4 INTERNAL REGISTERS 10
2.5 INT OUPUT 10
TABLE 1: INT PIN OPERATION FOR TRANSMITTER 10
TABLE 2: INT PIN OPERATION FOR RECEIVER 10
2.6 CRYSTAL OSCILLATOR OR EXTERNAL CLOCK INPUT 11
FIGURE 7. TYPICAL CRYSTAL CONNECTIONS 11
2.7 PROGRAMMABLE BAUD RATE GENERATOR WITH FRACTIONAL DIVISOR 12
2.7.1 INDEPENDENT TX/RX BRG 12
FIGURE 8. BAUD RATE GENERATOR 13
TABLE 3: TYPICAL DATA RATES WITH A 24 MHZ CRYSTAL OR EXTERNAL CLOCK AT 16X SAMPLING 13
2.8 TRANSMITTER 14
2.8.1 TRANSMIT HOLDING REGISTER (THR) - WRITE ONLY 14
2.8.2 TRANSMITTER OPERATION IN NON-FIFO MODE 14
FIGURE 9. TRANSMITTER OPERATION IN NON-FIFO MODE 14
2.8.3 TRANSMITTER OPERATION IN FIFO MODE 15
FIGURE 10. TRANSMITTER OPERATION IN FIFO AND FLOW CONTROL MODE 15
2.9 RECEIVER 15
2.9.1 RECEIVE HOLDING REGISTER (RHR) - READ-ONLY 15
FIGURE 11. RECEIVER OPERATION IN NON-FIFO MODE 16
FIGURE 12. RECEIVER OPERATION IN FIFO AND AUTO RTS FLOW CONTROL MODE 16
2.10 AUTO RTS (HARDWARE) FLOW CONTROL 17
2.11 AUTO RTS HYSTERESIS 17
TABLE 4: AUTO RTS (HARDWARE) FLOW CONTROL 17
2.12 AUTO CTS FLOW CONTROL 17
FIGURE 13. AUTO RTS AND CTS FLOW CONTROL OPERATION 18
2.13 AUTO XON/XOFF (SOFTWARE) FLOW CONTROL 19
TABLE 5: AUTO XON/XOFF (SOFTWARE) FLOW CONTROL 19
2.14 SPECIAL CHARACTER DETECT 19
2.15 NORMAL MULTIDROP MODE 19
2.15.1 AUTO ADDRESS DETECTION 20
2.16 INFRARED MODE 20
FIGURE 14. INFRARED TRANSMIT DATA ENCODING AND RECEIVE DATA DECODING 21
2.17 SLEEP MODE WITH AUTO WAKE-UP AND POWER-SAVE FEATURE 21
2.17.1 SLEEP MODE 21
2.17.2 POWER-SAVE FEATURE 22
2.17.3 WAKE-UP INTERRUPT 22
2.18 INTERNAL LOOPBACK 23
FIGURE 15. INTERNAL LOOPBACK 23
3.0 UART INTERNAL REGISTERS 24
TABLE 6: UART INTERNAL REGISTERS 24
TABLE 7: INTERNAL REGISTERS DESCRIPTION. SHADED BITS ARE ENABLED WHEN EFR BIT-4=1 25
4.0 INTERNAL REGISTER DESCRIPTIONS 26
4.1 RECEIVE HOLDING REGISTER (RHR) - READ- ONLY 26
4.2 TRANSMIT HOLDING REGISTER (THR) - WRITE-ONLY 26
4.3 INTERRUPT ENABLE REGISTER (IER) - READ/WRITE 26
4.3.1 IER VERSUS RECEIVE FIFO INTERRUPT MODE OPERATION 27

The product(s) mentioned in this data sheet are no longer being manufactured and may not be ordered (OBS)

4.3.2 IER VERSUS RECEIVE/TRANSMIT FIFO POLLED MODE OPERATION 27
4.4 INTERRUPT STATUS REGISTER (ISR) - READ-ONLY 28
4.4.1 INTERRUPT GENERATION: 28
4.4.2 INTERRUPT CLEARING: 28
TABLE 8: INTERRUPT SOURCE AND PRIORITY LEVEL 29
4.5 FIFO CONTROL REGISTER (FCR) - WRITE-ONLY 30
TABLE 9: TRANSMIT AND RECEIVE FIFO TRIGGER TABLE AND LEVEL SELECTION 31
4.6 LINE CONTROL REGISTER (LCR) - READ/WRITE 31
TABLE 10: PARITY SELECTION 32
4.7 MODEM CONTROL REGISTER (MCR) OR GENERAL PURPOSE OUTPUTS CONTROL - READ/WRITE 32
TABLE 11: INT OUTPUT MODES 33
4.8 LINE STATUS REGISTER (LSR) - READ ONLY 34
4.9 MODEM STATUS REGISTER (MSR) - READ ONLY 35
4.10 MODEM STATUS REGISTER (MSR) - WRITE ONLY 36
4.11 SCRATCH PAD REGISTER (SPR) - READ/WRITE 36
4.12 ENHANCED MODE SELECT REGISTER (EMSR) - WRITE-ONLY 37
TABLE 12: SCRATCHPAD SWAP SELECTION 37
4.13 BAUD RATE GENERATOR REGISTERS (DLL, DLM AND DLD) - READ/WRITE 38
TABLE 13: SAMPLING RATE SELECT 38
TABLE 14: BRG SELECT 38
4.14 RX/TX FIFO LEVEL COUNT REGISTER (FC) - READ-ONLY 39
4.15 FEATURE CONTROL REGISTER (FCTR) - READ/WRITE 39
4.16 ENHANCED FEATURE REGISTER (EFR) - READ/WRITE 40
TABLE 15: SOFTWARE FLOW CONTROL FUNCTIONS 40
4.17 SOFTWARE FLOW CONTROL REGISTERS (XOFF1, XOFF2, XON1, XON2) - READ/WRITE 41
TABLE 16: UART RESET CONDITIONS 42
ABSOLUTE MAXIMUM RATINGS 43
TYPICAL PACKAGE THERMAL RESISTANCE DATA (MARGIN OF ERROR: ± 15%) 43
ELECTRICAL CHARACTERISTICS 43
DC ELECTRICAL CHARACTERISTICS 43
AC ELECTRICAL CHARACTERISTICS 44
TA = -40O TO +85OC, VCC IS 1.62 TO 3.6V, 70 PF LOAD WHERE APPLICABLE 44
FIGURE 16. CLOCK TIMING 45
FIGURE 17. MODEM INPUT/OUTPUT TIMING 46
FIGURE 18. 16 MODE (INTEL) DATA BUS READ TIMING 46
FIGURE 19. 16 MODE (INTEL) DATA BUS WRITE TIMING 47
FIGURE 20. 68 MODE (MOTOROLA) DATA BUS READ TIMING 47
FIGURE 22. RECEIVE READY & INTERRUPT TIMING [NON-FIFO MODE] 48
FIGURE 21. 68 MODE (MOTOROLA) DATA BUS WRITE TIMING 48
FIGURE 23. TRANSMIT READY & INTERRUPT TIMING [NON-FIFO MODE] 49
FIGURE 24. RECEIVE READY & INTERRUPT TIMING [FIFO MODE] 49
FIGURE 25. TRANSMIT READY & INTERRUPT TIMING [FIFO MODE] 50
PACKAGE DIMENSIONS (32 PIN QFN - 5 X 5 X 0.9 mm) 51
PACKAGE DIMENSIONS (48 PIN TQFP - 7 X 7 X 1 mm) 52
PACKAGE DIMENSIONS (25 PIN BGA - 3 X 3 X 0.8 mm) 53
REVISION HISTORY 54

The product (or products) mentioned in this data sheet are no longer being manufactured and may not be ordered (OBS)