GENERAL DESCRIPTION

The **SP3495E - SP3497E** transceivers are suitable for high speed bidirectional communication on multipoint bus transmission lines. They are designed for balanced data transmission and comply with both RS-485 and RS-422 EIA standards. Each device contains one differential driver and one differential receiver

Driver differential outputs and receiver differential inputs are connected internally to form a half-duplex input/output to the RS-485 bus. Separate $\overline{RE}$ and DE pins enable and disable the driver and receiver independently or may be externally connected together as a direct control. The device enters a low power shutdown mode if both driver and receiver are disabled. the bus-pin outputs of disabled or powered down devices are in high impedance state. The high impedance driver output is maintained over the entire common-mode voltage range of -7V to +12V.

SP3495E - SP3497E operates from a single 3.3V power supply. SP3495E - SP3497E transceivers load the data bus only half as much as a standard RS-485 unit load. This allows up to 64 devices to be connected simultaneously on a bus without violating required RS-485 signal margin and without using repeaters. Excessive power dissipation caused by bus contention or by shorting outputs to ground or a voltage source is prevented by short circuit protection and thermal shutdown. This feature forces the driver output into high impedance state if the absolute value of the output current exceeds 250mA or if junction temperature exceeds 165°C. Receivers will fail-safe to a logic high output state if the inputs are unconnected (floating) or shorted. All RS-485 inputs and outputs are ESD protected up to +/-15kV Human Body Model.

FEATURES

- 3.3V Single Supply Operation
- High Speed up to 32Mbps
- Robust +/-15kV ESD protection
- Hot Swap glitch protection
- Advanced Fail-safe Receiver Inputs
- Half Unit Load, 64 Transceivers on bus
- Driver short circuit current limit and thermal shutdown for overload protection
- Low Current 1uA shutdown mode

TYPICAL APPLICATIONS

- Factory Automation Controls
- Motor Control
- Industrial Process Control
- Building Automation
- Security Systems
- Remote Utility Meter Reading
- Long or unterminated transmission lines

The product(s) mentioned in this data sheet are no longer being manufactured and may not be ordered (OBS)

FIGURE 1. TYPICAL APPLICATION CIRCUIT

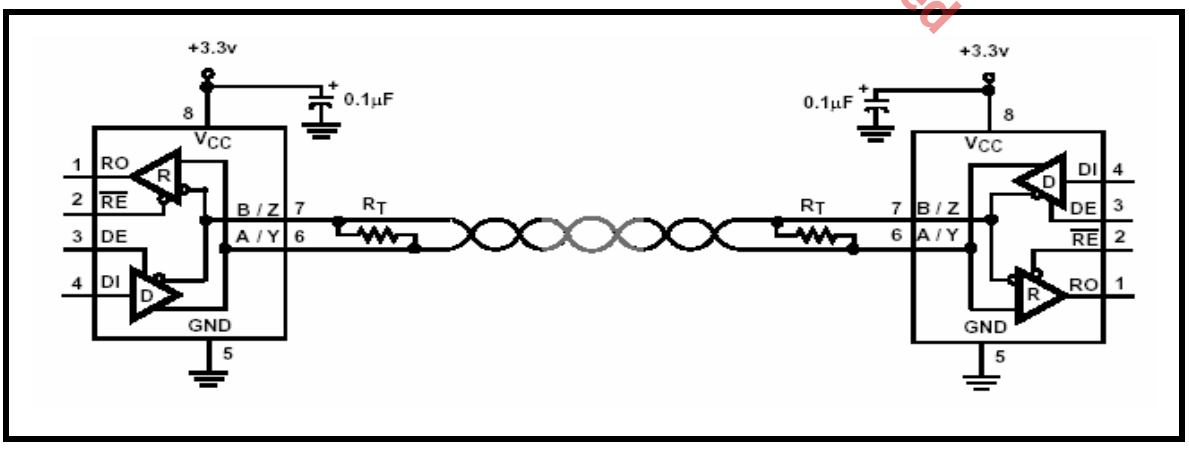

FIGURE 2. PIN OUT ASSIGNMENT

SP3495E 8-Pin Half Duplex

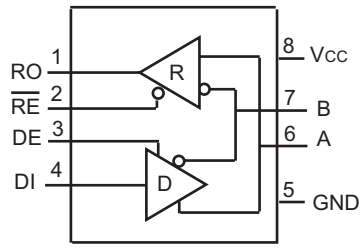

SP3496E 8-pin Full Duplex

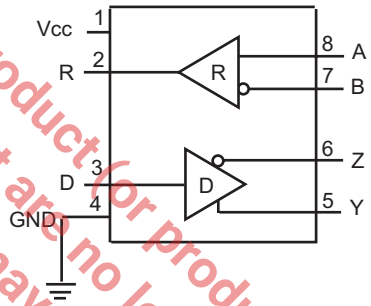

SP3497E 14-pin Full Duplex

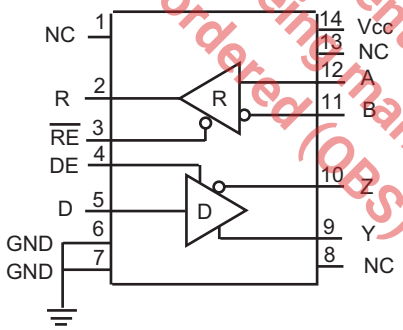

The product (or products) mentioned in this data sheet are no longer being manufactured and may not be ordered (OBS)

ORDERING INFORMATION

PART NUMBER	PACKAGE	OPERATING TEMPERATURE RANGE	DEVICE STATUS
SP3495EEN-L	8-pin Narrow SOIC	-40°C to +85°C	Active
SP3495EEN-L/TR	8-pin Narrow SOIC	-40°C to +85°C	Active
SP3496EEN-L	8-pin Narrow SOIC	-40°C to +85°C	Active
SP3496EEN-L/TR	8-pin Narrow SOIC	-40°C to +85°C	Active
SP3497EEN-L	14-pin Narrow SOIC	-40°C to +85°C	Active
SP3497EEN-L/TR	14-pin Narrow SOIC	-40°C to +85°C	Active

Note: To order Tape and Reel option include "/TR" in ordering part number. All packages are Pb-free/ RoHS compliant.

PIN DESCRIPTIONS

Pin Assignments

Pin Number			Pin Name	Type	Description
Half Duplex	Full Duplex				
SP3495E	SP3496E	SP3497E			
1	2	2	RO	O	Receiver Output. When $\overline{RE}$ is low and if (A-B) ≥ -40mV, RO is High. If (A-B) ≤ -200mV, RO is Low.
2	-	3	$\overline{RE}$	I	Receiver Output Enable, When $\overline{RE}$ is Low, RO is enabled. When $\overline{RE}$ is High, RO is high impedance. $\overline{RE}$ should be High and DE should be low to enter shutdown mode. $\overline{RE}$ is a hot-swap input.
3	-	4	DE	I	Driver Output Enable. When DE is High, outputs are enabled. When DE is low, outputs are high impedance. DE should be low and $\overline{RE}$ should be High to enter shutdown mode. DE is a hot-swap input
4	3	5	DI	I	Driver Input. With DE high, a low level on DI forces Non-Inverting output low and inverting output high. Similarly, a high level on DI forces Non-Inverting output High and Inverting output Low.
5	4	6, 7	GND	Pwr	Ground
6	-	-	A	O	Non-Inverting Receiver Input and Non-Inverting Driver Output
7	-	-	B	O	Inverting Receiver Input and Inverting Driver Output
8	1	14	Vcc	Pwr	+3.3V power supply input. Bypass with 0.1uF capacitor.
-	8	12	A	I	Non-Inverting Receiver Input
-	7	11	B	I	Inverting Reciever Input
-	5	9	Y	O	Non-Inverting Driver Output
-	6	10	Z	O	Inverting Driver Output
-	-	1, 8, 13	NC	-	No Connect, not internally connected

Pin type: I=Input, O=Output.

The product (or products) mentioned in this data sheet are no longer being manufactured and may not be ordered (OBS).

ABSOLUTE MAXIMUM RATINGS

These are stress ratings only and functional operation of the device at these ratings or any other above those indicated in the operation sections to the specifications below is not implied. Exposure to absolute maximum rating conditions for extended periods of time may affect reliability and cause permanent damage to the device.

V_{CC}	+6.0V
Input Voltage at control pins ($\overline{RE}$, DE and DI)	-0.5V to (V_{CC} + 0.3V)
Voltage Range on A and B pins	-9V to +14V
Storage Temperature Range	-65°C to + 150°C
Power Dissipation Maximum Junction Temperature 150°C 8-Pin SO θ_{JA} = 128.4°C/W 14-Pin SO θ_{JA} = 86°C/W	

CAUTION:

ESD (Electrostatic Discharge) sensitive device. Permanent damage may occur on unconnected devices subject to high energy electrostatic fields. Unused devices must be stored in conductive foam or shunts. Personnel should be properly grounded prior to handling this device. The protective foam should be discharged to the destination socket before devices are removed.

The product (or products) mentioned in this data sheet are no longer being manufactured and may not be ordered (OBS)

ELECTRICAL CHARACTERISTICS

UNLESS OTHERWISE NOTED: VCC = +3.0V TO +3.6V WITH T_A FROM -40°C TO +85°C. TYPICAL VALUES ARE AT VCC = +3.3V AND 25°C.

SYMBOL	PARAMETERS	MIN.	TYP.	MAX.	UNITS	CONDITIONS
DRIVER DC CHARACTERISTICS						
V_{OD}	Differential Driver Output			Vcc	V	No Load
		2.0				R_L = 100Ω (RS-422), Figure 3
		1.5				R_L = 54Ω (RS-485), Figure 3
		1.5				V_{CM} = -7V, Figure 4
		1.5				V_{CM} = +12V, Figure 4
ΔV_{OD}	Change in Magnitude of Differential Output	-0.20		0.20	V	R_L = 100Ω (RS-422), Figure 3, See note 1
		-0.20		0.20		R_L = 54Ω (RS-485), Figure 3, See note 1
		-0.20		0.20		V_{CM} = -7V, Figure 4, See note 1
		-0.20		0.20		V_{CM} = +12V, Figure 4, See note 1
V_{OC}	Driver Common Mode Output Voltage steady state	1.3		2.5	V	Figure 3
ΔV_{OC}	Change in Magnitude of Common Mode Output Voltage	-0.2		0.2	V	Figure 3, See note 1
I_{DSC}	Driver Short Circuit Current Limit	-250			mA	V_{OUT} Forced to -7V, Figure 5
				250	mA	V_{OUT} Forced to +12V, Figure 5

UNLESS OTHERWISE NOTED: VCC = +3.0V TO +3.6V WITH T_A FROM -40°C TO +85°C. TYPICAL VALUES ARE AT VCC = +3.3V AND 25°C.

SYMBOL	PARAMETERS	MIN.	TYP.	MAX.	UNITS	CONDITIONS
V_{IH}	Logic Input Thresholds (DI, DE, $\overline{RE}$)	2.0			V	Logic Input High
V_{IL}				0.8	V	Logic Input Low
V_{HYS}	Driver Input Hysteresis		100		mV	T_A = 25°C
I_{IN}	Logic Input Current (DI, DE and $\overline{RE}$)			10	uA	IN = 0V
		-10			uA	IN = Vcc
Driver AC Characteristics						
freq	Data Signaling Rate	32			Mbps	$1/t_{UI}$, Duty Cycle 40 to 60%
t_{PLH}	Driver Propagation Delay (low to High)	5	11	24	ns	C_L = 50pF, R_L = 54Ω, freq = 8MHz, Figures 6 and 7
t_{PHL}	Driver Propagation Delay (High to Low)	5	11	24	ns	C_L = 50pF, R_L = 54Ω, freq = 8MHz, Figures 6 and 7
t_R	Driver Rise Time	2.5	4.5	10	ns	C_L = 50pF, R_L = 54Ω, freq = 8MHz, Figures 6 and 7
t_F	Driver Fall time	2.5	4.5	10	ns	C_L = 50pF, R_L = 54Ω, freq = 8MHz, Figures 6 and 7
$\lvert t_{PLH}-t_{PHL}\rvert$	Differential Pulse Skew			3	ns	Figures 6 and 7
t_{OZH}	Driver Enable to Output High			50	ns	C_L = 50pF, R_L = 500Ω, Figures 8 and 9
t_{OZL}	Driver Enable to Outut Low			50	ns	C_L = 50pF, R_L = 500Ω, Figures 10 and 11
t_{OHZ}	Driver Disable from Output High			50	ns	C_L = 50pF, R_L = 500Ω, Figures 8 and 9
t_{OLZ}	Driver Disable from Output Low			50	ns	C_L = 50pF, R_L = 500Ω, Figures 10 and 11
t_{OZV}	Shutdown to Driver Output Valid			6	us	C_L = 50pF, R_L = 500Ω
t_{SHDN}	Time to Shutdown	50		600	ns	Note 2 and 3
RECEIVER DC CHARACTERISTICS						
I_{IN}	Input Current (A, B pins)	-290		500	uA	DE = 0, Vcc = 0 or 3.3V V_A or V_B = 12V, other input 0V V_A or V_B = -7V, other input 0V
V_{IH}	Receiver Differential Thresholds (V_A - V_B)		-85	-40	mV	-7V ≤ V_{CM} ≤ 12V, rising
V_{IL}		-200	-125		mV	-7V ≤ V_{CM} ≤ 12V, falling
	Receiver Input Hysteresis		25		mV	V_{CM} = 0V
V_{OH}	Receiver Output Voltage High	2.4			V	I_{OUT} = -8mA, V_{ID} = 200mV
V_{OL}	Receiver Output Voltage Low			0.4	V	I_{OUT} = 8mA, V_{ID} = -200mV

The product (or products) mentioned in this datasheet are no longer being manufactured and may not be ordered (OBS)

UNLESS OTHERWISE NOTED: VCC = +3.0V TO +3.6V WITH T_A FROM -40°C TO +85°C. TYPICAL VALUES ARE AT VCC = +3.3V AND 25°C.

SYMBOL	PARAMETERS	MIN.	TYP.	MAX.	UNITS	CONDITIONS
I_{OZ}	High-Z Receiver Output Current	-1			uA	$\overline{RE}$ = Vcc, V_{OUT} = 0V
				1	uA	$\overline{RE}$ = Vcc, V_{OUT} = Vcc
I_{OSS}	Receiver Output Short Circuit Current	-95			mA	V_{OUT} = 0V
				95	mA	V_{OUT} = Vcc
R_{IN}	Receiver Input Resistance	24			KΩ	-7V ≤ V_{CM} ≤ 12V
RECEIVER AC CHARACTERISTICS						
freq	Data Signaling Rate	32			Mbps	1/t_{UI}, Duty Cycle 40 to 60%
t_{PLH}	Receiver Propagation Delay (Low to High)		15	40	ns	V_{ID} = +/-2V, C_L = 15pF, Freq = 8MHz, Figure 12 and 13
t_{PHL}	Receiver Propagation Delay (High to Low)		15	40	ns	V_{ID} = +/-2V, C_L = 15pF, Freq = 8MHz, Figure 12 and 13
skew	Receiver Propagation Delay Skew			3	ns	V_{ID} = +/-2V, C_L = 15pF, Freq = 8MHz, Figure 12 and 13 skew = $\lvert t_{PLH}-t_{PHL} \rvert$
t_R	Receiver Output Rise Time	1	2	6	ns	C_L = 15pF, Freq = 8MHz
t_F	Receiver Output Fall Time	1	2	6	ns	C_L = 15pF, Freq = 8MHz
t_{ZH}	Receiver Enable to Output High			50	ns	C_L = 15pF, R_L = 1kΩ, Figure 14
t_{ZL}	Receiver Enable to Output Low			50	ns	C_L = 15pF, R_L = 1kΩ, Figure 14
t_{HZ}	Receiver Output High to Disable			50	ns	C_L = 15pF, R_L = 1kΩ, Figure 14
t_{LZ}	Receiver Output Low to Disable			50	ns	C_L = 15pF, R_L = 1kΩ, Figure 14
$t_{ZH(SHDN)}$	Shutdown to Receiver Output Valid High			6	us	C_L = 15pF, R_L = 1kΩ
$t_{ZL(SHDN)}$	Shutdown to Receiver Output Valid Low			6	us	C_L = 15pF, R_L = 1kΩ
t_{SHDN}	Time to Shutdown	50		600	ns	Note 2 and 3
POWER REQUIRMENTS AND RECOMMENDED OPERATING CONDITIONS						
Vcc	Supply Voltage	3.0	3.3	3.6	V	
I_{CC1}	Supply Current - Driver Enabled			5.0	mA	DE = Vcc, No Load, $\overline{RE}$ and DI = 0V or Vcc
I_{CC2}	Supply Current - Receiver Enabled			5.0	mA	DE = 0V, $\overline{RE}$ = 0V, No Load
I_{CC3}	Supply Current - Shutdown Mode		1	6	uA	DE = 0V, $\overline{RE}$ = Vcc, DI = Vcc or 0V
T_{SD}	Thermal Shutdown Temperature		165		°C	

The product (or products) mentioned in this data sheet are no longer being manufactured and may not be ordered (OBS)

UNLESS OTHERWISE NOTED: VCC = +3.0V TO +3.6V WITH T_A FROM -40°C TO +85°C. TYPICAL VALUES ARE AT VCC = +3.3V AND 25°C.

SYMBOL	PARAMETERS	MIN.	TYP.	MAX.	UNITS	CONDITIONS
	Thermal Shutdown Hysteresis		20		°C	
	ESD Protection at Pins A, B, Y and Z		+/-15		kV	Human Body Model

NOTE:

1. *Change in Magnitude of Differential Output Voltage and Change in Magnitude of Common Mode Output Voltage are the changes in output voltage when DI input changes state.*
2. *The transceivers are put into shutdown by bringing $\overline{RE}$ High and DE Low simultaneously for at least 600ns. If the control inputs are in this state for less than 50ns, the device is guaranteed not enter shutdown. If the enable inputs are held in this state for at least 600ns the device is assured to be in shutdown. Note that the receiver and driver enable times increase during shutdown*
3. *Gauranteed by design and bench characterization.*

The product (or products) mentioned in this data sheet are no longer being manufactured and may not be ordered (OBS)

FIGURE 3. DRIVER DC TEST CIRCUIT

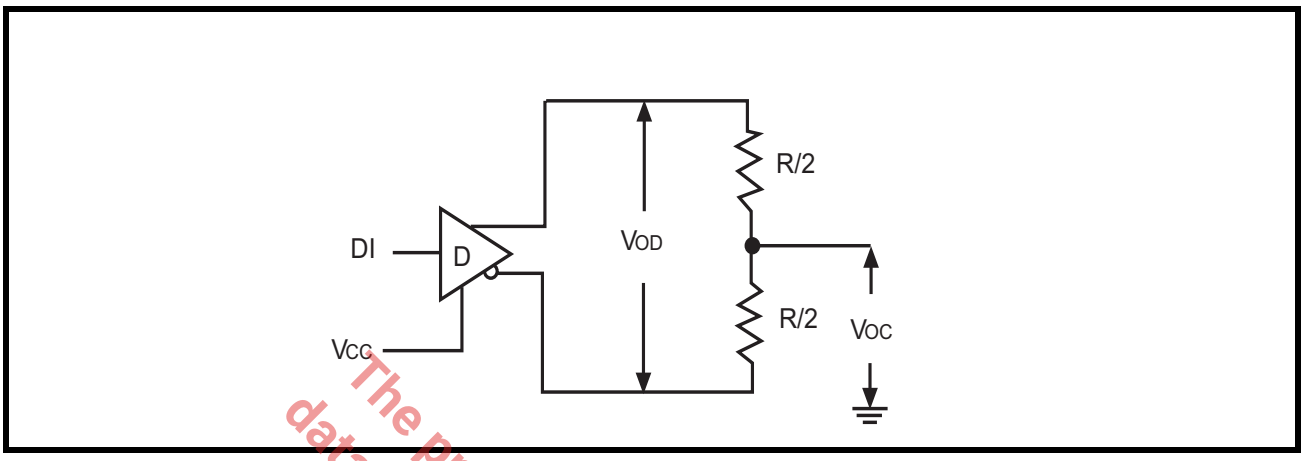

FIGURE 4. DRIVER COMMON MODE LOAD TEST

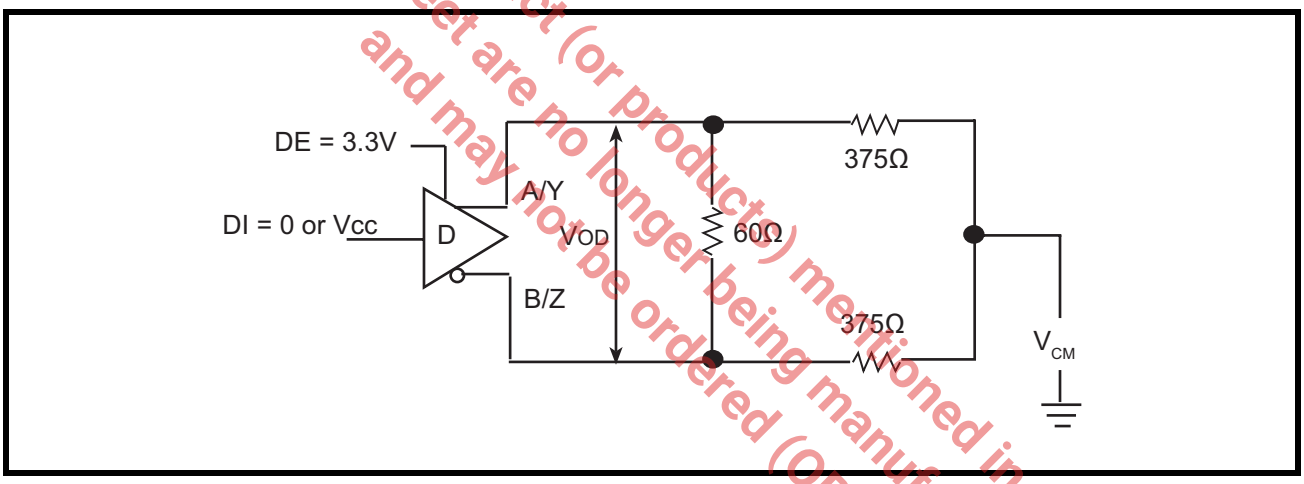

FIGURE 5. DRIVER SHORT CIRCUIT CURRENT LIMIT TEST

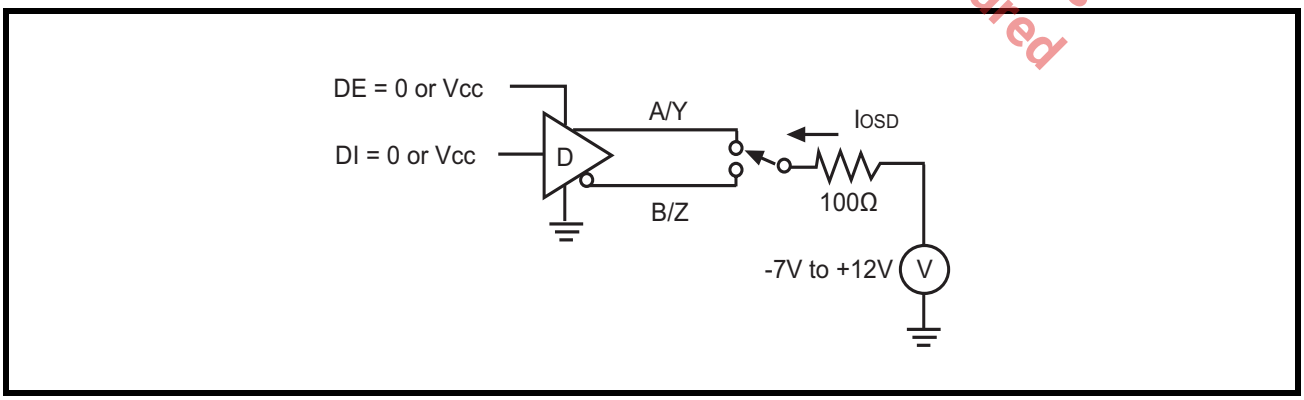

The product (or products) mentioned in this data sheet are no longer being manufactured and may not be ordered (OBS)

FIGURE 6. DRIVER PROPAGATION DELAY TEST CIRCUIT

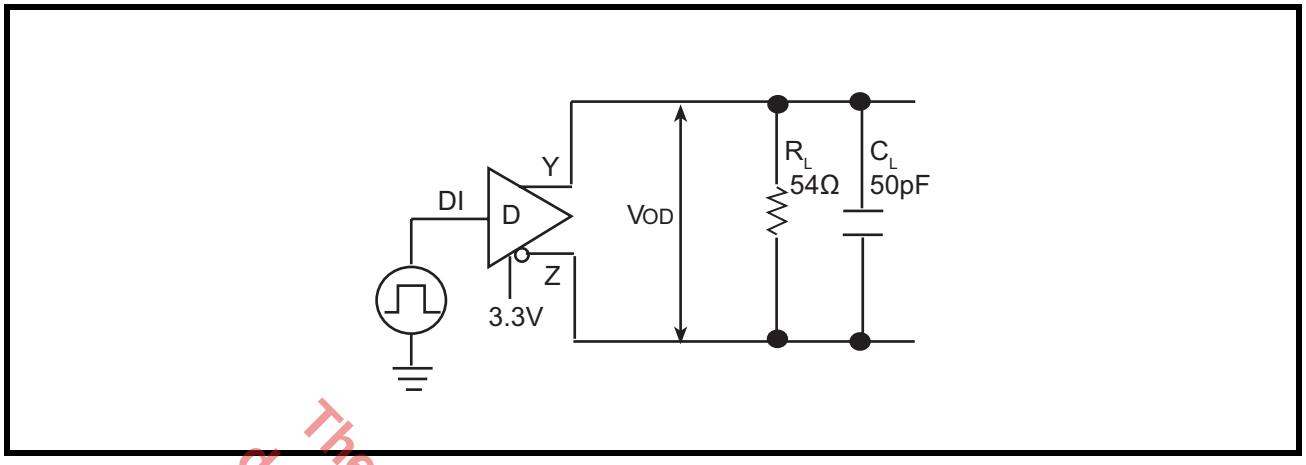

FIGURE 7. DRIVER PROPAGATION DELAY TIMING DIAGRAM

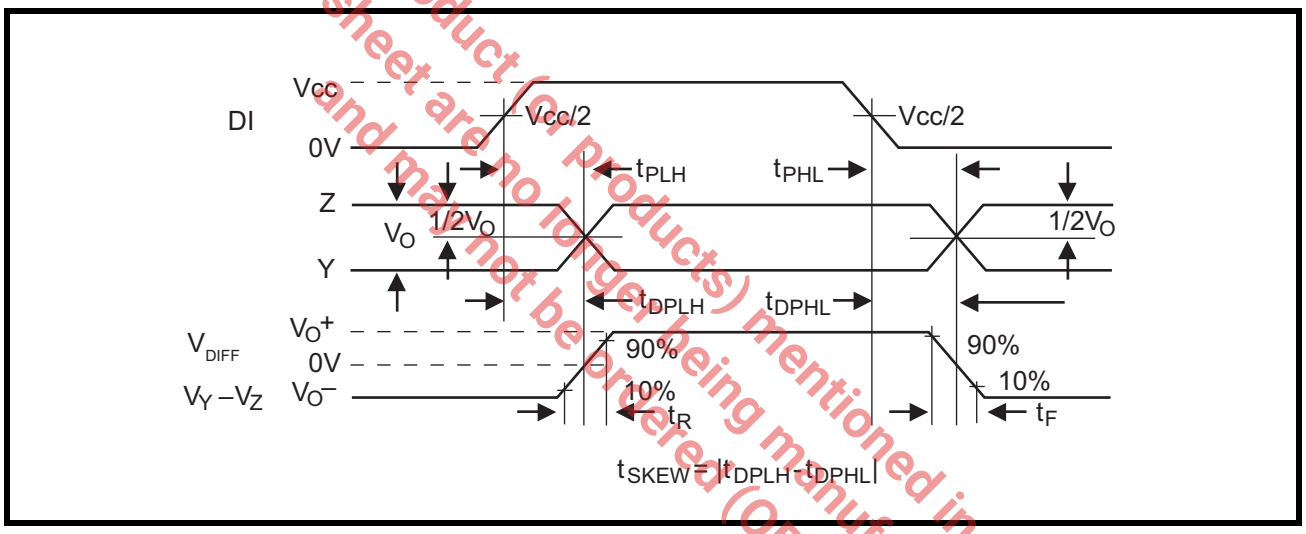

FIGURE 8. DRIVER ENABLE AND DISABLE TIME TEST CIRCUIT 1

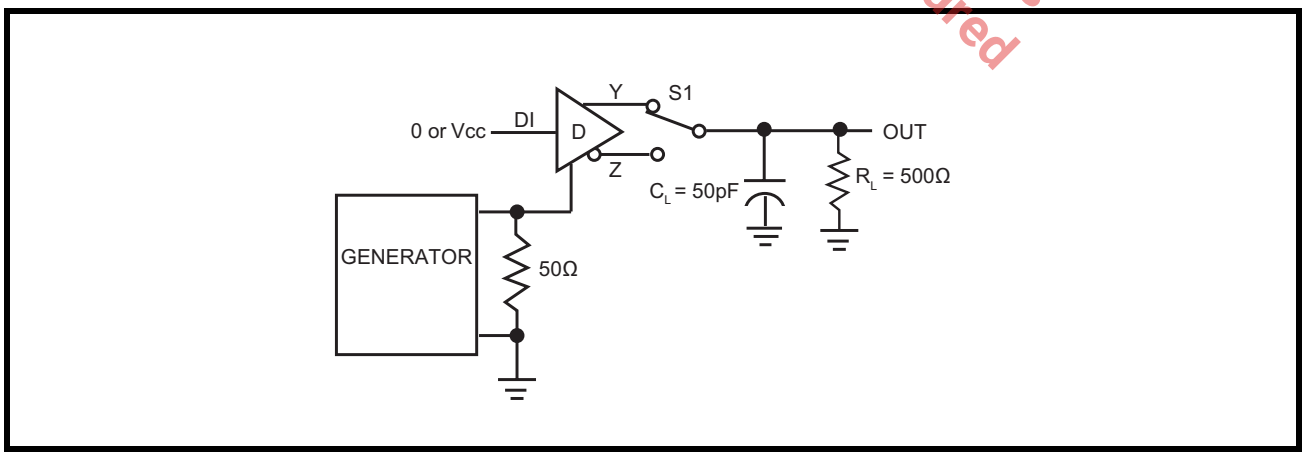

The product (or products) mentioned in this data sheet are no longer being manufactured and may not be ordered (OBS)

FIGURE 9. DRIVER ENABLE DISABLE TIMING DIAGRAM 1

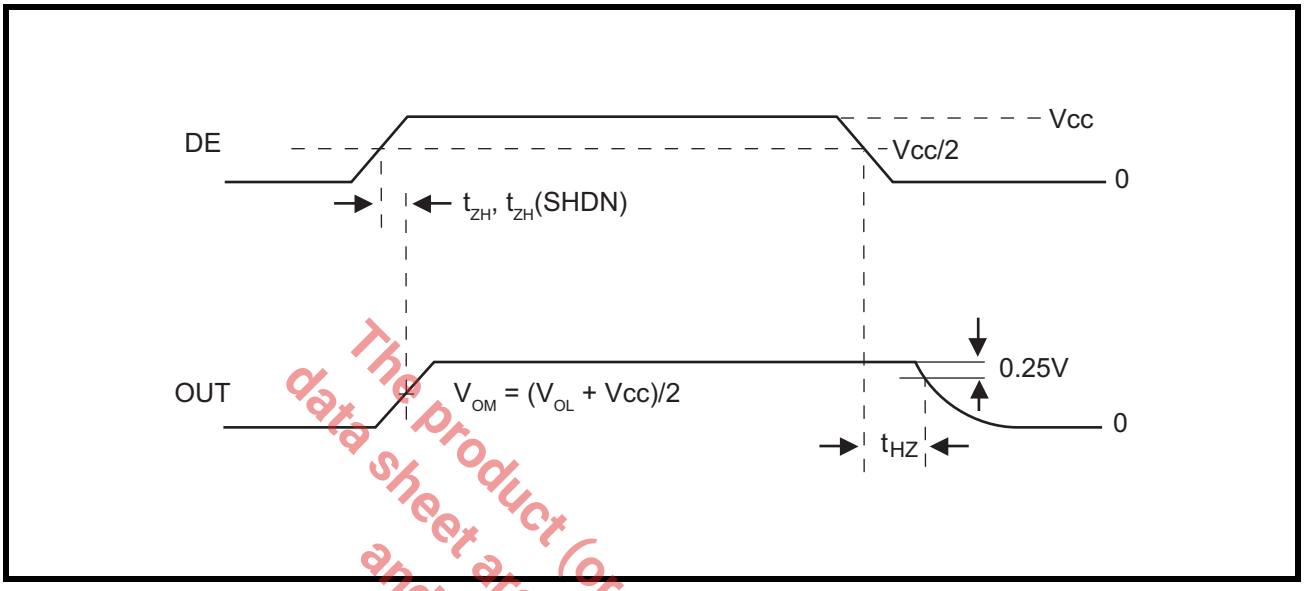

The product (or products) mentioned in this data sheet are no longer being manufactured and may not be ordered (OBS)

FIGURE 10. DRIVER ENABLE AND DISABLE TIME TEST CIRCUIT 2

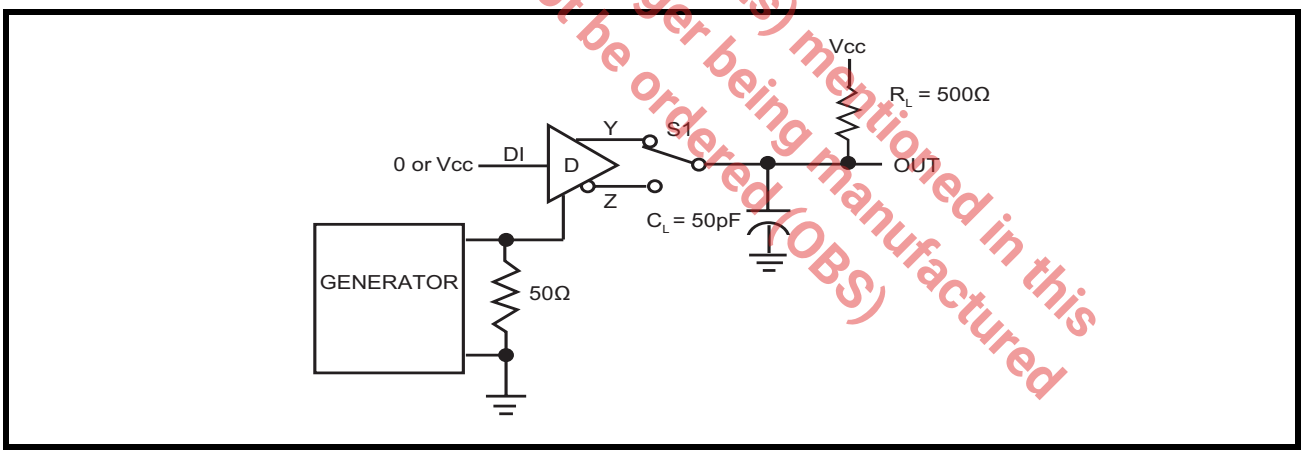

FIGURE 11. DRIVER ENABLE AND DISABLE TIMING DIAGRAM 2

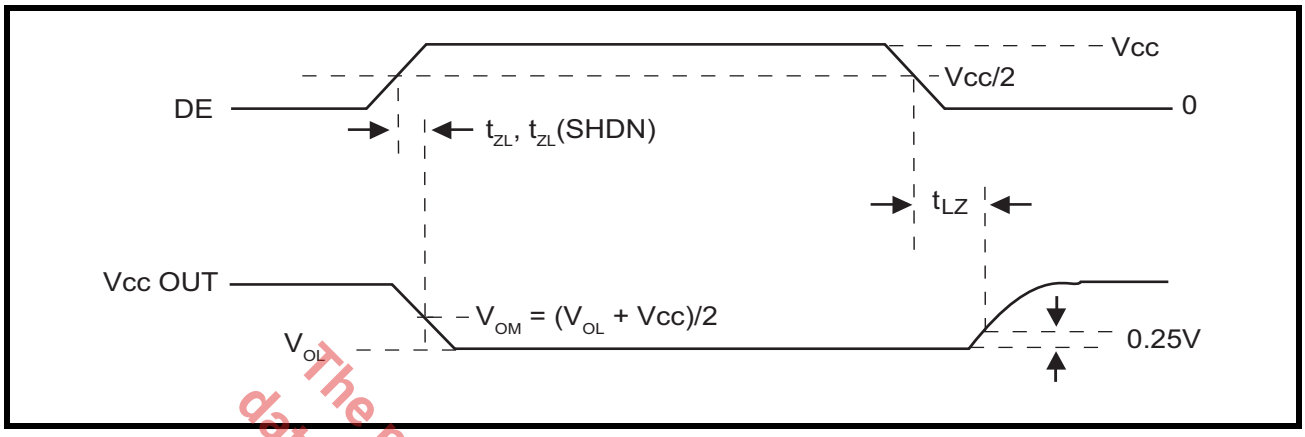

The product (or products) mentioned in this data sheet are no longer being manufactured and may not be ordered (OBS)

FIGURE 12. RECEIVER PROPAGATION DELAY TEST CIRCUIT

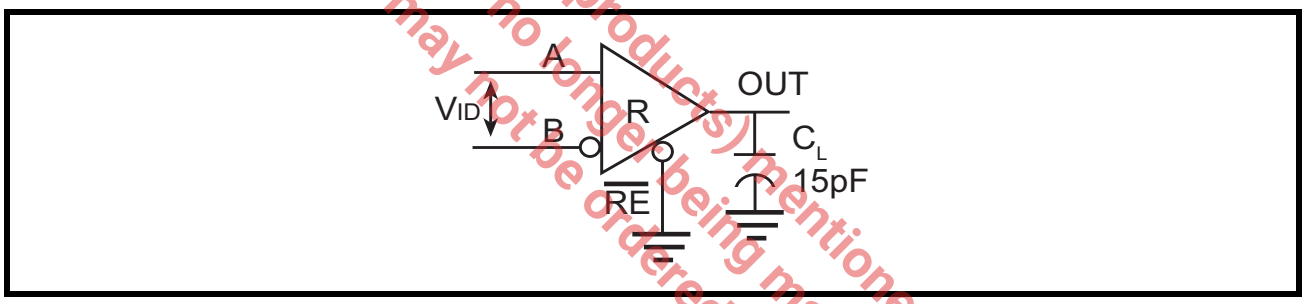

FIGURE 13. RECEIVER PROPAGATION DELAY TIMING DIAGRAM

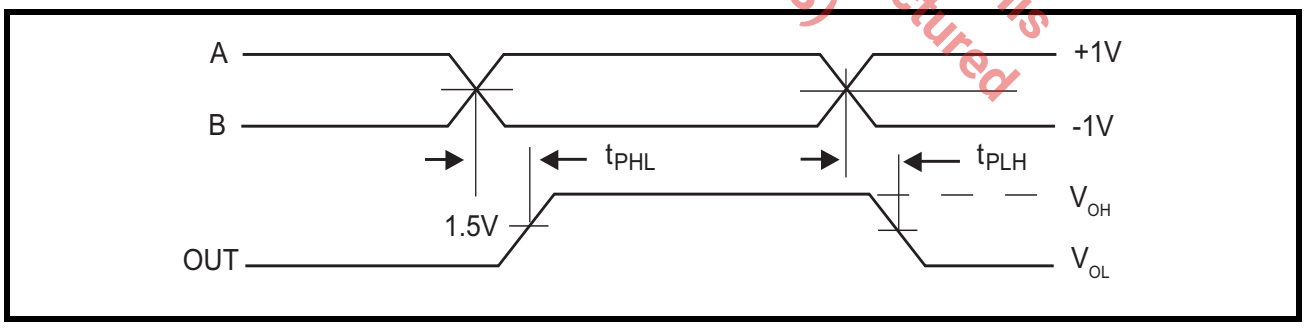

FIGURE 14. RECEIVER ENABLE AND DISABLE TIMES TEST CIRCUIT

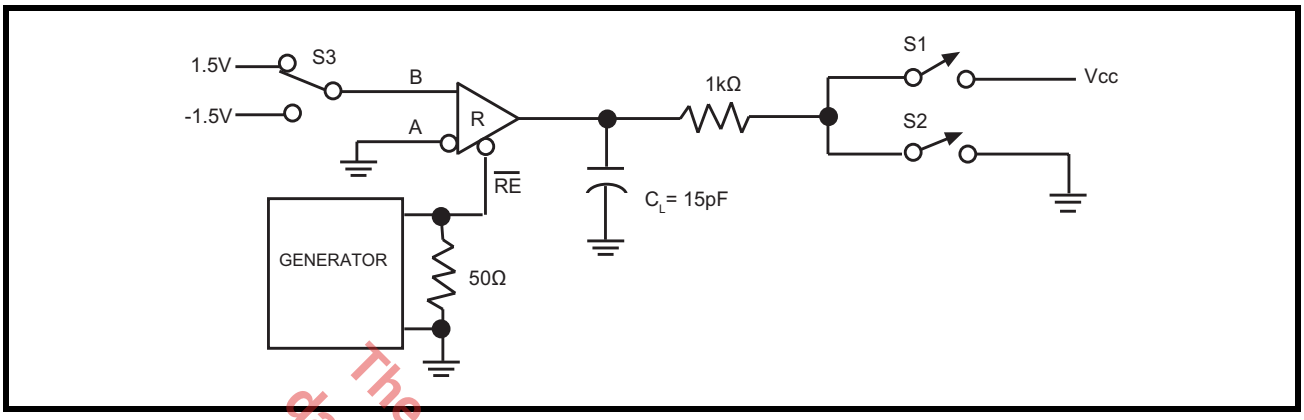

The product (or products) mentioned in this data sheet are no longer being manufactured and may not be ordered (OBS)

FIGURE 15. RECEIVER ENABLE AND DISABLE TIMING DIAGRAM 1

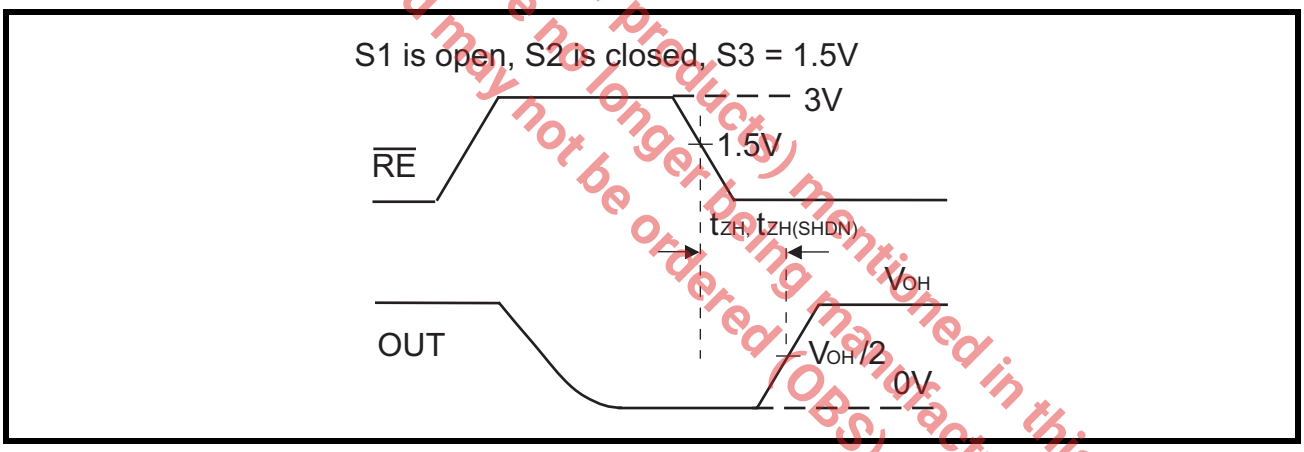

FIGURE 16. RECEIVER ENABLE AND DISABLE TIMING DIAGRAM 2

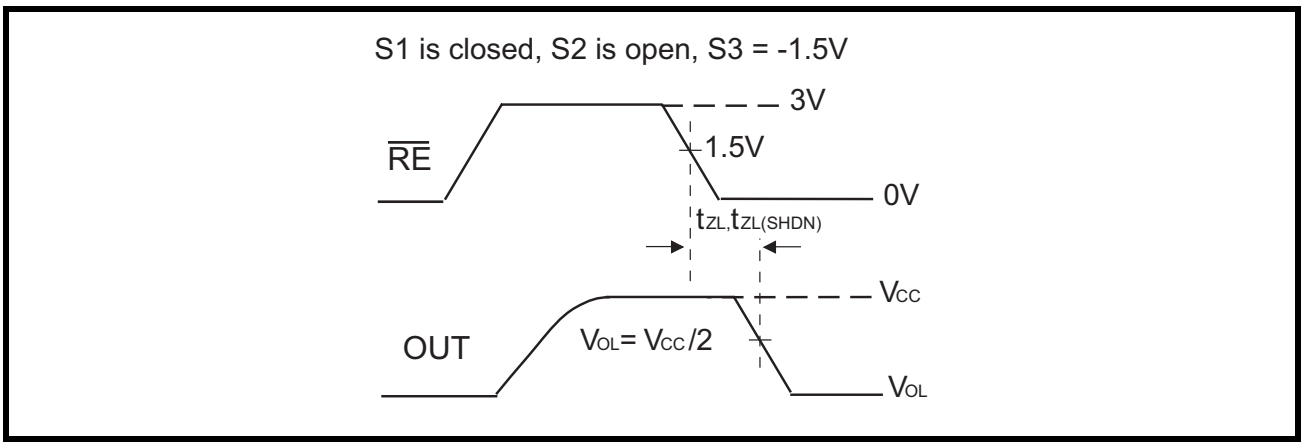

FIGURE 17. RECEIVER ENABLE AND DISABLE TIMING DIAGRAM 3

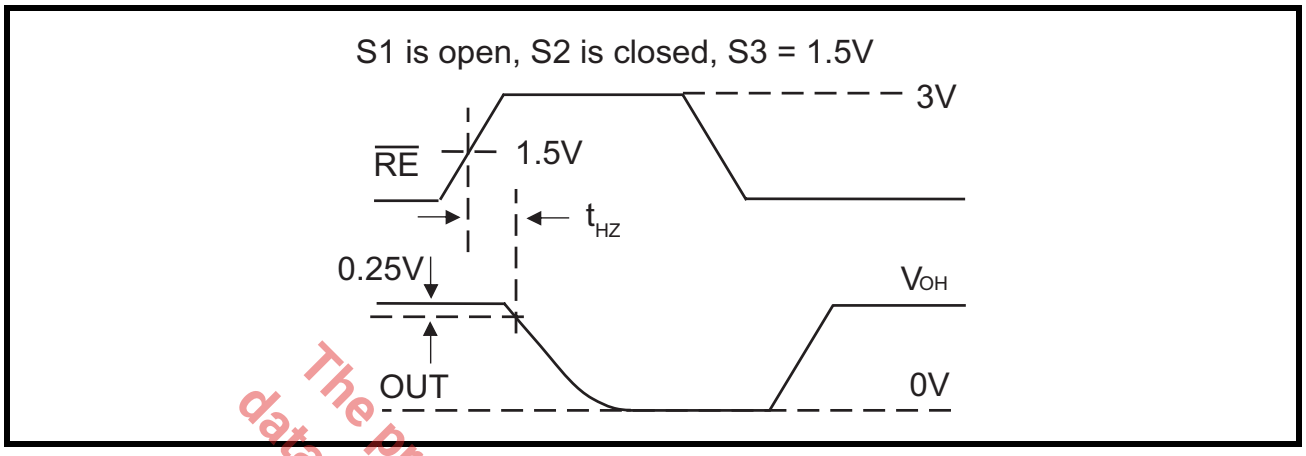

The product (or products) mentioned in this data sheet are no longer being manufactured and may not be ordered (OBS)

FIGURE 18. RECEIVER ENABLE AND DISABLE TIMING DIAGRAM 4

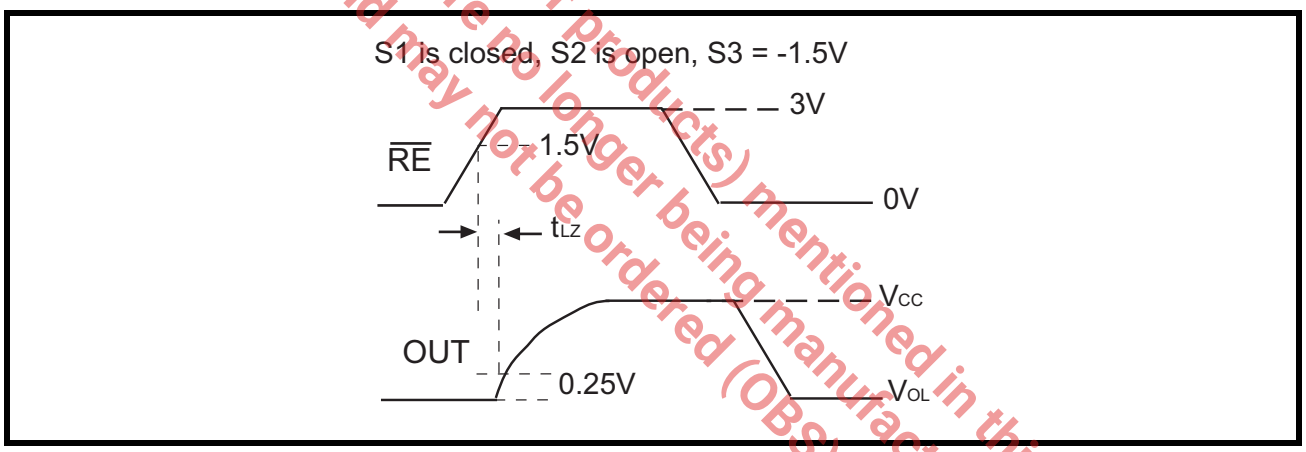

1.0 PRODUCT DESCRIPTION

The SP349xE high speed transceivers contain one driver and one receiver. The SP3495 is a half-duplex design while the SP3496E and SP3497E are full-duplex designs. The control pins $\overline{RE}$ and DE feature a hotswap capability allowing live insertion without spurious data transfer. Drivers are output short-circuit current limited. Thermal-shutdown circuitry protects drivers against excessive power dissipation. When activited, the thermal-shutdown circuitry forces the driver outptus into a high-impedance state.

Advanced Failsafe

The Receivers incorporate fail-safe circuitry, which guarantees a logic-high receiver output when the receiver inputs are open or shorted, or when they are connected to a terminated transmission line with all drivers disabled. In a terminated bus with all transmitters disabled the receivers differential input voltage is pulled to 0V by the termination. The SP349xE interprets 0V differential as a logic high with a minimum 40mV noise margin.

HOT-SWAP CAPABILITY

When Vcc is first applied the SP349xE holds the driver enable and receiver enable inactive for approximately 10 microseconds. During power ramp-up other system IC's may drive unpredictable values. Hot-swap capability prevents the SP349xE from driving any output signal until power has stabilized. After the initial power-up sequence, the hot-swap circuit becomes transparent and driver enable and receiver enable resume their normal functions and timings

The product (or products) mentioned in this data sheet are no longer being manufactured and may not be ordered (OBS)

PACKAGE DIMENSIONS (14 PIN NSOIC)

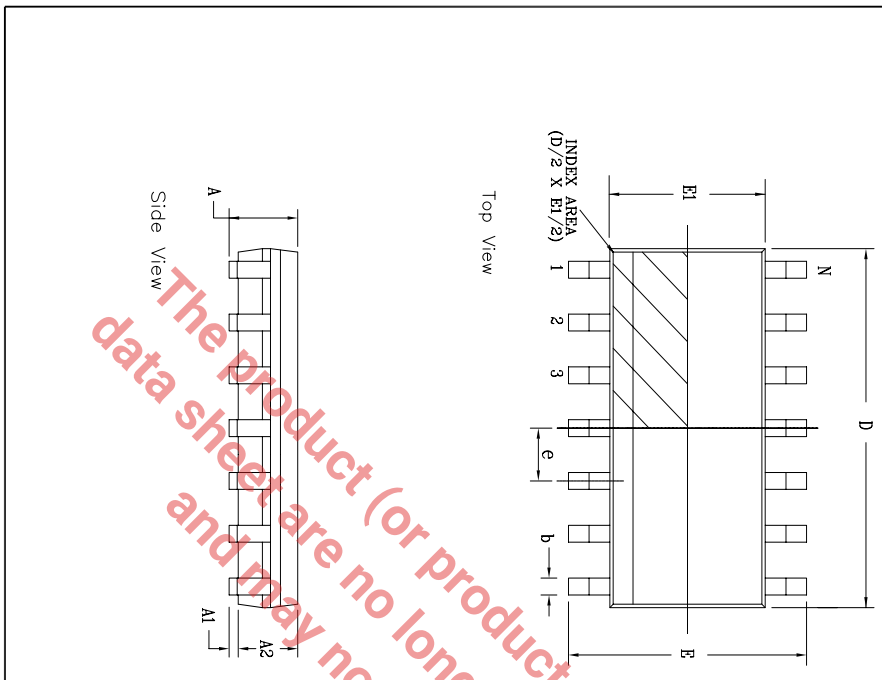

REVISION HISTORY

REV.	DISCRIPTION	DATE	APP'D
A	DRAWING ORIGINATION	04/17/06	JL
B	CHANGE DRAWING LOGO AND COMPANY NAME	11/21/07	JL

14 Pin SOICN JEDEC MS-012 Variation AB

SYMBOLS	DIMENSIONS IN MM (Control Unit)			DIMENSIONS IN INCH (Reference Unit)		
	MIN	NOM	MAX	MIN	NOM	MAX
A	1.35	—	1.75	0.053	—	0.069
A1	0.10	—	0.25	0.004	—	0.010
A2	1.25	—	1.65	0.049	—	0.065
b	0.31	—	0.51	0.012	—	0.020
c	0.17	—	0.25	0.007	—	0.010
E	6.00 BSC			0.236 BSC		
E1	3.90 BSC			0.154 BSC		
e	1.27 BSC			0.050 BSC		
h	0.25	—	0.50	0.010	—	0.020
L	0.40	—	1.27	0.016	—	0.050
L1	1.04 REF			0.041 REF		
L2	0.25 BSC			0.010 BSC		
R	0.07	—	—	0.003	—	—
R1	0.07	—	—	0.003	—	—
θ	0°	—	8°	0°	—	8°
θ1	5°	—	15°	5°	—	15°
θ2	0°	—	—	0°	—	—
D	8.65 BSC			0.341 BSC		
N	14			14		

EXAR CORPORATION

14 PIN SOICN PACKAGE OUTLINE

Packaging Approval:	Drawing No:	14-PIN SOICN
By: JL Date: 11/21/07	Revision: B	Sheet: 1 OF 1

The product (or products) mentioned in this data sheet are no longer being manufactured and may not be ordered (OBS)

PACKAGE DIMENSIONS (8 PIN NSOIC)

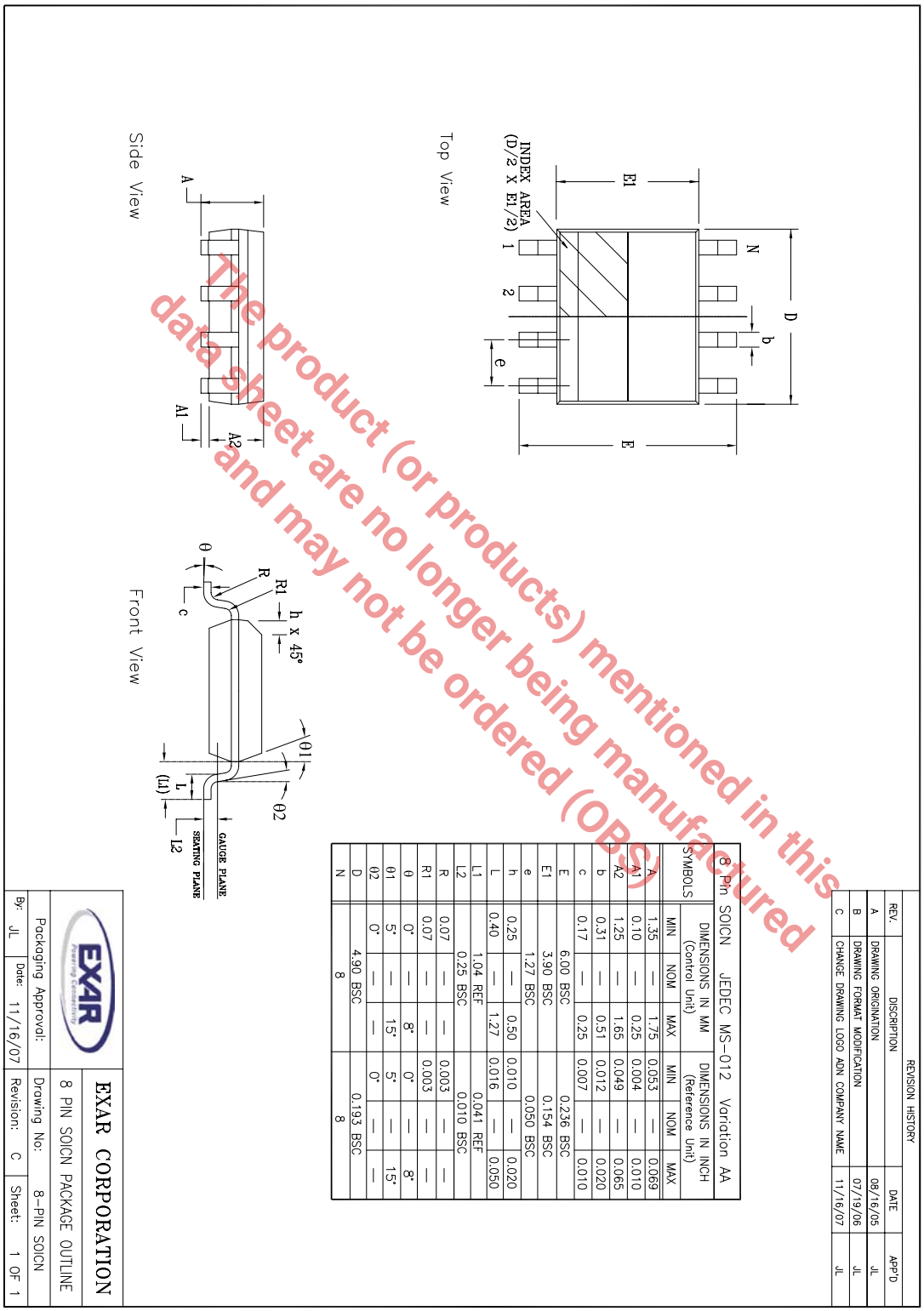

The product (or products) mentioned in this data sheet are no longer being manufactured and may not be ordered (OBS)

REVISION HISTORY

DATE	REVISION	DESCRIPTION
5/01/09	1.0.0	Production Release.

The product (or products) mentioned in this data sheet are no longer being manufactured and may not be ordered (OBS)

NOTICE

EXAR Corporation reserves the right to make changes to the products contained in this publication in order to improve design, performance or reliability. EXAR Corporation assumes no responsibility for the use of any circuits described herein, conveys no license under any patent or other right, and makes no representation that the circuits are free of patent infringement. Charts and schedules contained here in are only for illustration purposes and may vary depending upon a user's specific application. While the information in this publication has been carefully checked; no responsibility, however, is assumed for inaccuracies.

EXAR Corporation does not recommend the use of any of its products in life support applications where the failure or malfunction of the product can reasonably be expected to cause failure of the life support system or to significantly affect its safety or effectiveness. Products are not authorized for use in such applications unless EXAR Corporation receives, in writing, assurances to its satisfaction that: (a) the risk of injury or damage has been minimized; (b) the user assumes all such risks; (c) potential liability of EXAR Corporation is adequately protected under the circumstances.

Copyright 2009 EXAR Corporation

Datasheet May 2009.

Send your technical inquiries with details to our e-mail hotline: uarttechsupport@exar.com.

Reproduction, in part or whole, without the prior written consent of EXAR Corporation is prohibited.