SP1490E/SP1491E

Full Duplex RS-485 Transceivers

FEATURES

- +5V Only
- Low Power BiCMOS
- Driver/Receiver Enable (SP1491E)
- RS-485 and RS-422 Drivers/Receivers
- Pin Compatible with SN75179 (SP1490E)
- Pin Compatible with SN75180 (SP1491E)
- Improved ESD Specifications
  ±15kV Human Body Model
  ±15kV IEC61000-4-2 Air Discharge

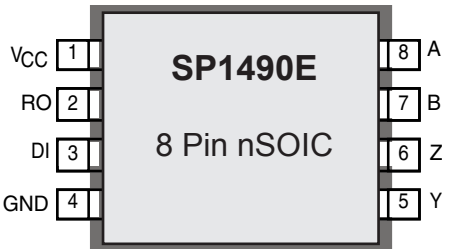

APPLICATIONS

- Industrial Networks
- Telecom
- Motor Control
- HVAC/ Building Control

The product (or products) mentioned in this data sheet are no longer being manufactured and may not be ordered (OBS)

DESCRIPTION

The SP1490E is a low power differential line driver/receiver meeting RS-485 and RS-422 standards up to 20Mbps. The SP1491E is identical to the SP1490E with the addition of driver and receiver tri-state enable lines. Both products feature ±200mV receiver input sensitivity, over wide common mode range. The SP1490E is available in an 8-pin NSOIC packages for operation over the commercial and industrial temperature ranges. The SP1491E is available in a 14-pin NSOIC packages for operation over the commercial and industrial temperature ranges.

BLOCK DIAGRAM

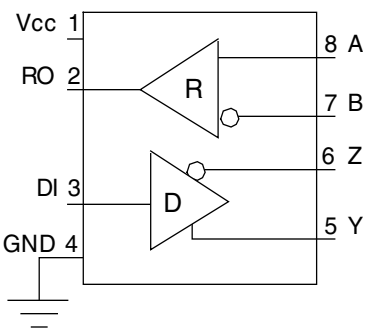

SP1490E

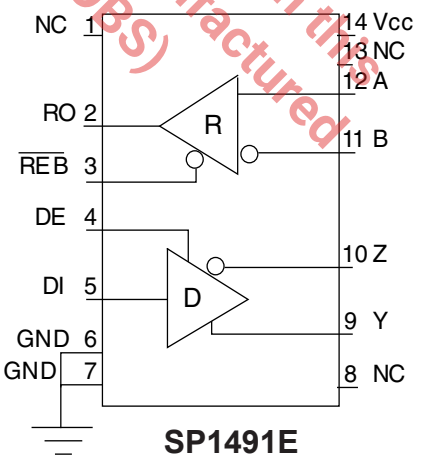

SP1491E

ABSOLUTE MAXIMUM RATINGS

These are stress ratings only and functional operation of the device at these ratings or any other above those indicated in the operation sections of the specifications below is not implied. Exposure to absolute maximum rating conditions for extended periods of time may affect reliability.

V_{CC}.....+7V
Input Voltages
Drivers.....-0.5V to (V_{CC}+0.5V)
Receivers.....±14V
Output Voltages
Drivers.....±14V
Receivers.....-0.5V to (V_{CC}+0.5V)
Storage Temperature.....-65˚C to +150˚
Power Dissipation.....1000mW

ELECTRICAL CHARACTERISTICS

T_{MIN} to T_{MAX} and V_{CC} = 5V ± 5% unless otherwise noted.

PARAMETERS	MIN.	TYP.	MAX.	UNITS	CONDITIONS
SP1490E/1491E DRIVER DC Characteristics					
Differential Output Voltage	3.5		V_{CC}	Volts	Unloaded; R = ∞ ; see figure 1
Differential Output Voltage	2		V_{CC}	Volts	With Load; R = 50Ω; (RS422); see figure 1
Differential Output Voltage	1.5		V_{CC}	Volts	With Load; R = 27Ω; (RS485); see figure 1
Change in Magnitude of Driver Differential Output Voltage for Complimentary States			0.2	Volts	R = 27Ω or R = 50Ω; see figure 1
Driver Common-Mode Output Voltage			3	Volts	R = 27Ω or R = 50Ω; see figure 1
Input High Voltage	2.0			Volts	Applies to D
Input Low Voltage			0.8	Volts	Applies to D
Input Current			±10	µA	Applies to D
Driver Short-Circuit Current					
V_{OUT} = HIGH			±250	mA	-7V ≤ V_O ≤ +12V
V_{OUT} = LOW			±250	mA	-7V ≤ V_O ≤ +12V
SP1490E/1491E DRIVER AC Characteristics					
Maximum Data Rate	20			Mbps	
Driver Input to Output		30	40	ns	$t_{R/F}$; R_{DIFF} = 54Ω, C_{L1} = C_{L2} = 100pF; see figures 3 and 6
Driver Input to Output		30	40	ns	$t_{R/F}$; R_{DIFF} = 54Ω, C_{L1} = C_{L2} = 100pF; see figures 3 and 6
Driver Skew			5	ns	see figures 3 and 6, $t_{R/F}$ = | t_{PLH} - t_{PHL} |
Driver Rise or Fall Time		8	20	ns	From 10% to 90%; R_{DIFF} = 54Ω, C_{L1} = C_{L2} = 100pF; see figures 3 and 6 $t_{R/F}$
SP1491E only					
Driver Enable to Output High		20	70	ns	C_{L1} = C_{L2} = 100pF; see figures 4 and 7; S_2 closed
Driver Enable to Output Low		40	70	ns	C_{L1} = C_{L2} = 100pF; see figures 4 and 7; S_1 closed
Driver Disable Time from Low		40	70	ns	C_{L1} = C_{L2} = 100pF; see figures 4 and 7; S_1 closed
Driver Disable Time from High		40	70	ns	C_{L1} = C_{L2} = 100pF; see figures 4 and 7; S_2 closed

The product (or products) mentioned in this data sheet are no longer being manufactured and may not be ordered (Obsolete)

T_{MIN} to T_{MAX} and V_{CC} = 5V ± 5% unless otherwise noted.

SP1490E/1491E RECEIVER DC Characteristics					
Differential Input Threshold	0.2		+0.2	Volts	-7V ≤ V_{CM} ≤ 12V
Input Hysteresis		70		mV	V_{CM} = 0V
Output Voltage High	3.5			Volts	I_O = -4mA, V_{ID} = +200mV
Output Voltage Low			0.4	Volts	I_O = +4mA, V_{ID} = -200mV
Input Resistance	12	15		kΩ	-7V ≤ V_{CM} ≤ 12V (1 unit load)
Input Current (A, B); V_{IN} = 12V			±1.0	mA	V_{IN} = 12V
Input Current (A, B); V_{IN} = -7V			-0.8	mA	V_{IN} = -7V
Short-Circuit Current			85	mA	0V ≤ V_O ≤ V_{CC}

PARAMETERS	MIN.	TYP.	MAX.	UNITS	CONDITIONS
SP1490E/1491E RECEIVER AC Characteristics					
Maximum Data Rate	20			Mbps	
Receiver Input to Output	20	45	50	ns	t_{PLH}; R_{DIFF} = 54Ω, C_{L1} = C_{L2} = 100pF; Figures 3 & 8
Receiver Input to Output	20	45	50	ns	t_{PHL}; R_{DIFF} = 54Ω, C_{L1} = C_{L2} = 100pF; Figures 3 & 8
Diff. Receiver Skew $\lvert t_{PLH}-t_{PHL} \rvert$		5	10	ns	R_{DIFF} = 54Ω; C_{L1} = C_{L2} = 100pF;
Receiver Tplh/Tphl		40	70	ns	
POWER REQUIREMENTS					
Supply Voltage	+4.75		+5.25	Volts	
Supply Current		900		µA	
ENVIRONMENTAL AND MECHANICAL					
Operating Temperature					
Commercial (_C_)	0		+70	°C	
Industrial (_E_)	-40		+85	°C	
Storage Temperature	-65		+150	°C	

The product (or products) mentioned in this data sheet are no longer being manufactured and may not be ordered (OBS)

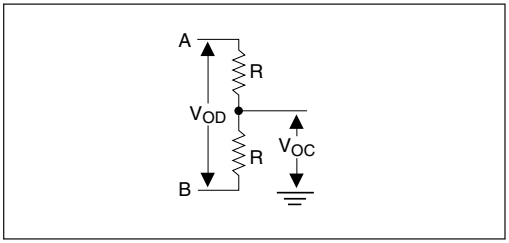

Figure 1. Driver DC Test Load Circuit

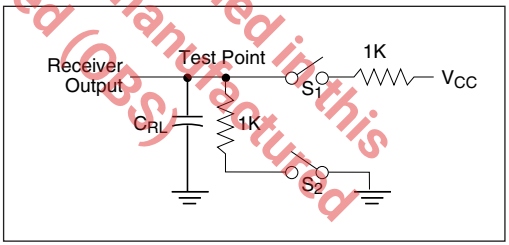

Figure 2. Receiver Timing Test Load Circuit

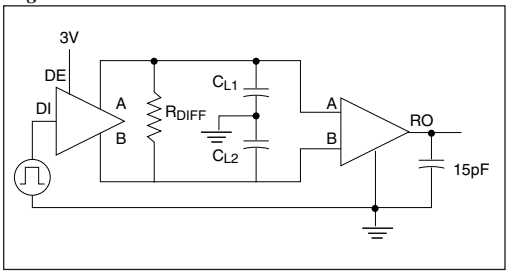

Figure 3. Driver/Receiver Timing Test Circuit

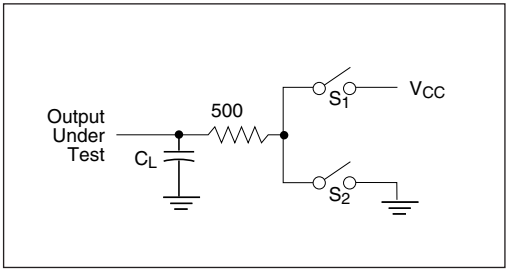

Figure 4. Driver Timing Test Load #2 Circuit

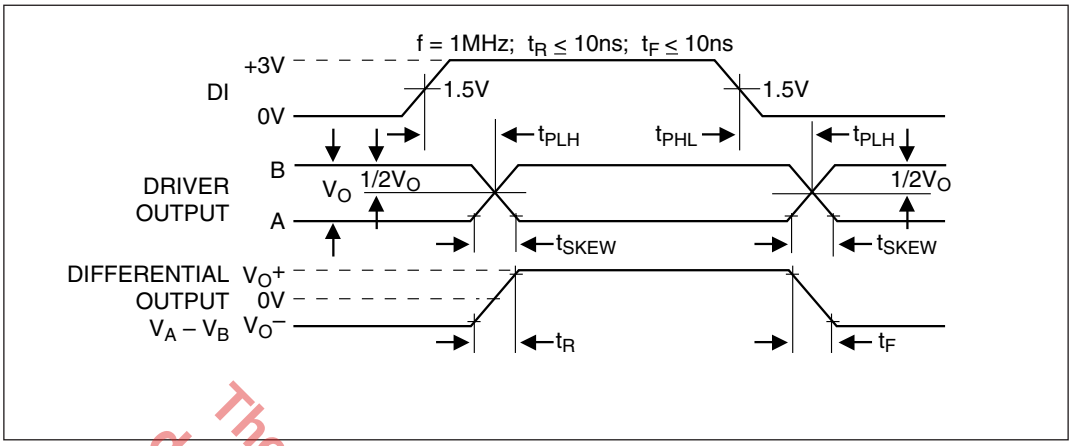

Figure 6. Driver Propagation Delays

The product (or products) mentioned in this data sheet are no longer being manufactured and may not be ordered (OBS)

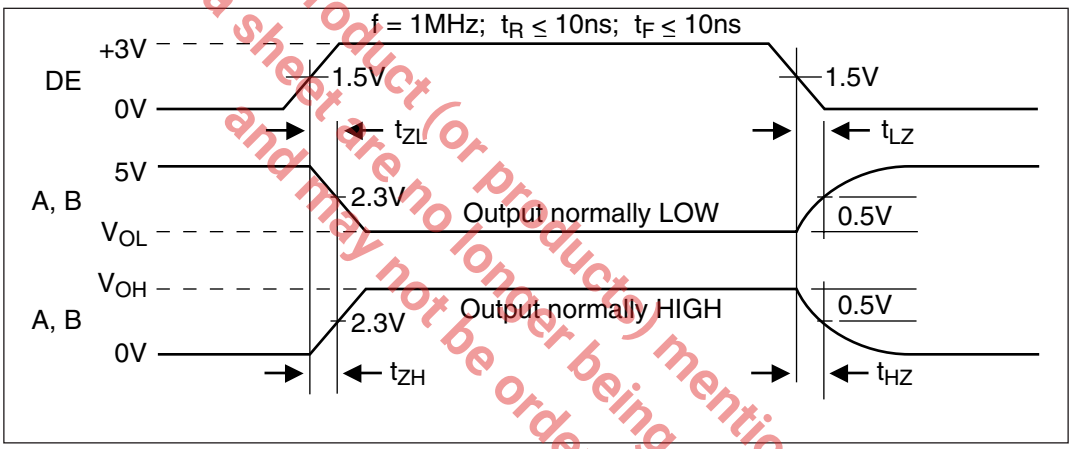

Figure 7. Driver Enable and Disable Times SP1491E only

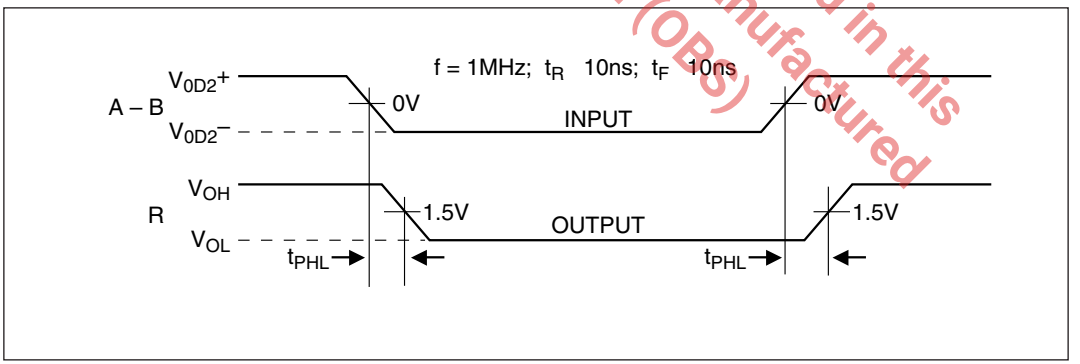

Figure 8. Receiver Propagation Delays

The SP1490E and SP1491E are full-duplex differential transceivers that meet the requirements of RS-485 and RS-422. Fabricated with a Exar proprietary BiCMOS process, both products require a fraction of the power of older bipolar designs.

The RS-485 standard is ideal for multi-drop applications or for long-distance interfaces. RS-485 allows up to 32 drivers and 32 receivers to be connected to a data bus, making it an ideal choice for multi-drop applications. Since the cabling can be as long as 4,000 feet, RS-485 transceivers are equipped with a wide (-7V to +12V) common mode range to accommodate ground potential differences. Because RS-485 is a differential interface, data is virtually immune to noise in the transmission line.

Driver...

The drivers for both the SP1490E and SP1491E have differential outputs. The typical voltage output swing with no load will be 0 volts to +5 volts. With worst case loading of 54Ω across the differential outputs, the driver can maintain greater than 1.5V voltage levels.

The driver of the SP1491E has a driver enable control line which is active high. A logic high on DE (pin 4) of the SP1491E will enable the differential driver outputs.

INPUTS		OUTPUTS	
DE SP1491E only	DI	Y	Z
1 1 0	1 0 x	1 0 z	0 1 z

Transmit Function Truth Table

A logic low on DE (pin 4) of the SP1491E will tri-state the driver outputs. The SP1490E does not have a driver enable.

Receiver...

The receivers for both the SP1490E and SP1491E have differential inputs with an input sensitivity as low as ±200mV. Input impedance of the receivers is typically 15KΩ (12KΩ minimum). A wide common mode range of -7V to +12V allows for large ground potential differences between systems. The receivers for both the SP1490E and SP1491E are equipped with the fail-safe feature. Fail-safe guarantees that the receiver output will be in a high state when the input is left unconnected and floating.

The receiver of the SP1491E has a receiver enable control line which is active low. A logic low on $\overline{REB}$ (pin 3) of the SP1491E will enable the differential receiver. A logic high on $\overline{REB}$ (pin 3) of the SP1491E will tri-state the receiver.

INPUTS		OUTPUTS
$\overline{RE}$ SP1491E only	A-B	R
0 0 0 1	+0.2V -0.2V open x	1 0 1 z

Recieve Function Truth Table

The product (or products) mentioned in this data sheet are no longer being manufactured and may not be ordered (OBS)

REVISION HISTORY			
REV.	DISCRIPTION	DATE	APP'D
A	DRAWING ORIGINATION	08/16/05	JL
B	DRAWING FORMAT MODIFICATION	07/19/06	JL
C	CHANGE DRAWING LOGO ADN COMPANY NAME	11/16/07	JL

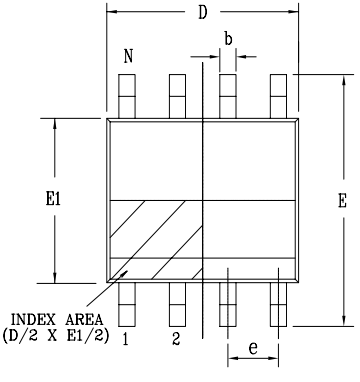

Top View

8 Pin SOICN JEDEC MS-012 Variation AA						
SYMBOLS	DIMENSIONS IN MM (Control Unit)			DIMENSIONS IN INCH (Reference Unit)		
	MIN	NOM	MAX	MIN	NOM	MAX
A	1.35	—	1.75	0.053	—	0.069
A1	0.10	—	0.25	0.004	—	0.010
A2	1.25	—	1.65	0.049	—	0.065
b	0.31	—	0.51	0.012	—	0.020
c	0.17	—	0.25	0.007	—	0.010
E	6.00 BSC			0.236 BSC		
E1	3.90 BSC			0.154 BSC		
e	1.27 BSC			0.050 BSC		
h	0.25	—	0.50	0.010	—	0.020
L	0.40	—	1.27	0.016	—	0.050
L1	1.04 REF			0.041 REF		
L2	0.25 BSC			0.010 BSC		
R	0.07	—	—	0.003	—	—
R1	0.07	—	—	0.003	—	—
θ	0°	—	8°	0°	—	8°
θ1	5°	—	15°	5°	—	15°
θ2	0°	—	—	0°	—	—
D	4.90 BSC			0.193 BSC		
N	8			8		

The product (or products) mentioned in this data sheet are no longer being manufactured and may not be ordered (OBS)

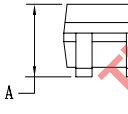

Side View

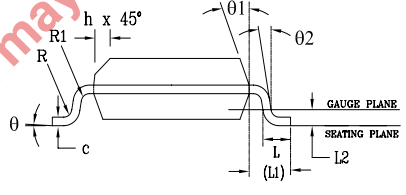

Front View

EXAR Powering Connectivity	EXAR CORPORATION		
	8 PIN SOICN PACKAGE OUTLINE		
Packaging Approval:		Drawing No:	8-PIN SOICN
By: JL	Date: 11/16/07	Revision: C	Sheet: 1 OF 1

REVISION HISTORY			
REV.	DISCRIPTION	DATE	APP'D
A	DRAWING ORIGINATION	04/17/06	JL
B	CHANGE DRAWING LOGO AND COMPANY NAME	11/21/07	JL

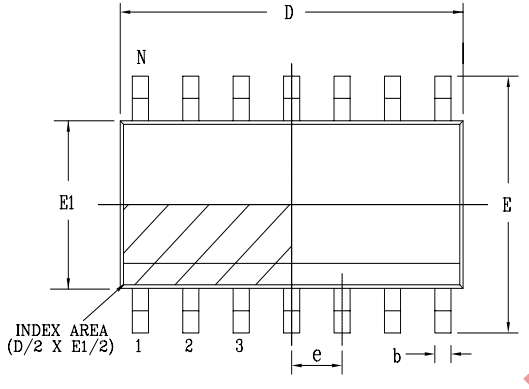

Top View

14 Pin SOICN JEDEC MS-012 Variation AB						
SYMBOLS	DIMENSIONS IN MM (Control Unit)			DIMENSIONS IN INCH (Reference Unit)		
	MIN	NOM	MAX	MIN	NOM	MAX
A	1.35	—	1.75	0.053	—	0.069
A1	0.10	—	0.25	0.004	—	0.010
A2	1.25	—	1.65	0.049	—	0.065
b	0.31	—	0.51	0.012	—	0.020
c	0.17	—	0.25	0.007	—	0.010
E	6.00 BSC			0.236 BSC		
E1	3.90 BSC			0.154 BSC		
e	1.27 BSC			0.050 BSC		
h	0.25	—	0.50	0.010	—	0.020
L	0.40	—	1.27	0.016	—	0.050
L1	1.04 REF			0.041 REF		
L2	0.25 BSC			0.010 BSC		
R	0.07	—	—	0.003	—	—
R1	0.07	—	—	0.003	—	—
θ	0°	—	8°	0°	—	8°
θ1	5°	—	15°	5°	—	15°
θ2	0°	—	—	0°	—	—
D	8.65 BSC			0.341 BSC		
N	14			14		

The product (or products) mentioned in this data sheet are no longer being manufactured and may not be ordered (OBS)

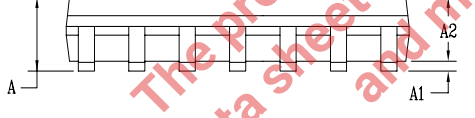

Side View

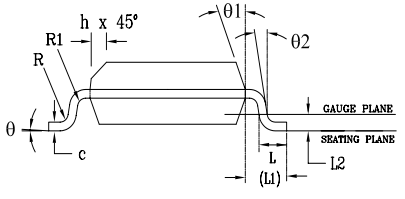

Front View

EXAR Powering Connectivity	EXAR CORPORATION		
	14 PIN SOICN PACKAGE OUTLINE		
Packaging Approval:	Drawing No:	14-PIN SOICN	
By: JL / Date: 11/21/07	Revision: B	Sheet: 1 OF 1	

ORDERING INFORMATION

Part Number	TopMark	Temperature Range	Package
SP1490ECN-L	1490ECNYYWW	0˚C to +70˚C	8-Pin NSOIC
SP1490ECN-L/TR	1490ECNYYWW	0˚C to +70˚C	8-Pin NSOIC
SP1490EEN-L	SP1490EENYYWW	-40˚C to +85˚C	8-Pin NSOIC
SP1490EEN-L/TR	SP1490EENYYWW	-40˚C to +85˚C	8-Pin NSOIC
SP1491ECN-L	SP1491ECNYYWW	0˚C to +70˚C	14-Pin NSOIC
SP1491ECN-L/TR	SP1491ECNYYWW	0˚C to +70˚C	14-Pin NSOIC
SP1491EEN-L	SP1491EENYYWW	-40˚C to +85˚C	14-Pin NSOIC
SP1491EEN-L/TR	SP1491EENYYWW	-40˚C to +85˚C	14-Pin NSOIC

/TR = Tape and Reel

Pack quantity is 2500 for Narrow SOIC.

The product (or products) mentioned in this data sheet are no longer being manufactured and may not be ordered (OBS)

DATE	REVISION	DESCRIPTION
03/08/07	J	Legacy Sipex Datasheet
06/12/09	1.0.0	Convert to Exar format, update ordering information and change revision to 1.0.0
05/24/13	1.0.1	Correct type error per PCN 13-0503-01 ECN: 1322-02 05/24/13

Notice

EXAR Corporation reserves the right to make changes to any products contained in this publication in order to improve design, performance or reliability. EXAR Corporation assumes no representation that the circuits are free of patent infringement. Charts and schedules contained herein are only for illustration purposes and may vary depending upon a user's specific application. While the information in this publication has been carefully checked; no responsibility, however, is assumed for inaccuracies.

EXAR Corporation does not recommend the use of any of its products in life support applications where the failure or malfunction of the product can reasonably be expected to cause failure of the life support system or to significantly affect its safety or effectiveness. Products are not authorized for use in such applications unless EXAR Corporation receives, in writting, assurances to its satisfaction that: (a) the risk of injury or damage has been minimized ; (b) the user assumes all such risks; (c) potential liability of EXAR Corporation is adequately protected under the circumstances.

Copyright 2013 EXAR Corporation

Datasheet May 2013

Send your serial transceiver technical inquiry with technical details to: serialtechsupport@exar.com

Reproduction, in part or whole, without the prior written consent of EXAR Corporation is prohibited.