GENERAL DESCRIPTION

The **XR5486E-XR5488E** family of RS-485 devices are designed for reliable, bidirectional communication on multipoint bus transmission lines. Each device contains one differential driver and one differential receiver. XR5488E is a half-duplex device while the other part numbers are full-duplex. All devices comply with TIA/EIA-485 and TIA/EIA-422 standards. Lead-free and RoHS compliant packages are available for all models.

These devices are ruggedized for use in harsh operating conditions over the entire common mode voltage range from -7V to +12V. Receivers are specially designed to fail-safe to a logic high output state if the inputs are left un-driven or shorted. All RS-485 bus-pins are protected against severe ESD events up to +/-15kV Air-Gap (IEC-61000-4-2), up to +/-8kV Contact Discharge (IEC-61000-4-2) and up to +/-15kV Human body Model. Drivers are protected from excess current flow caused by bus contention or output short-circuits by both an internal current limit and a thermal-overload shutdown. Devices are rated for Industrial (-40°C to +85°C) operating temperatures. Receivers have exceptionally high input impedance, which places only 1/8th the standard load on a bus. Up to 256 transceivers may coexist while preserving full signal margin.

All devices operate from a single 5.0V power supply and draw negligible quiescent power. All versions except the XR5487E may independently enable and disable their driver and receiver and enter a low power shutdown mode if both driver and receiver are disabled. All outputs maintain high impedance in shutdown or when powered-off.

FEATURES

- 5.0V Single Supply Operation
- High Speed up to 52Mbps
- Advanced Fail-safe Receiver Inputs
- Hot Swap glitch protection on control inputs
- Robust ESD Protection for RS-485 pins
  - +/-15kV Air-Gap Discharge
  - +/-15kV Human Body Model
  - +/-8kV Contact Discharge
- 1/8th Unit Load, 256 transceivers on bus
- Driver short circuit current limit and thermal shutdown for overload protection
- Low Current 1μA shutdown mode (except XR5487E)
- Industry standard package footprints

TYPICAL APPLICATIONS

- Motor Control
- Building Automation
- Security Systems
- Remote Utility Meter Reading

The product (or products) mentioned in this data sheet are no longer being manufactured and may not be ordered (OBS).

FIGURE 1. TYPICAL APPLICATION CIRCUIT

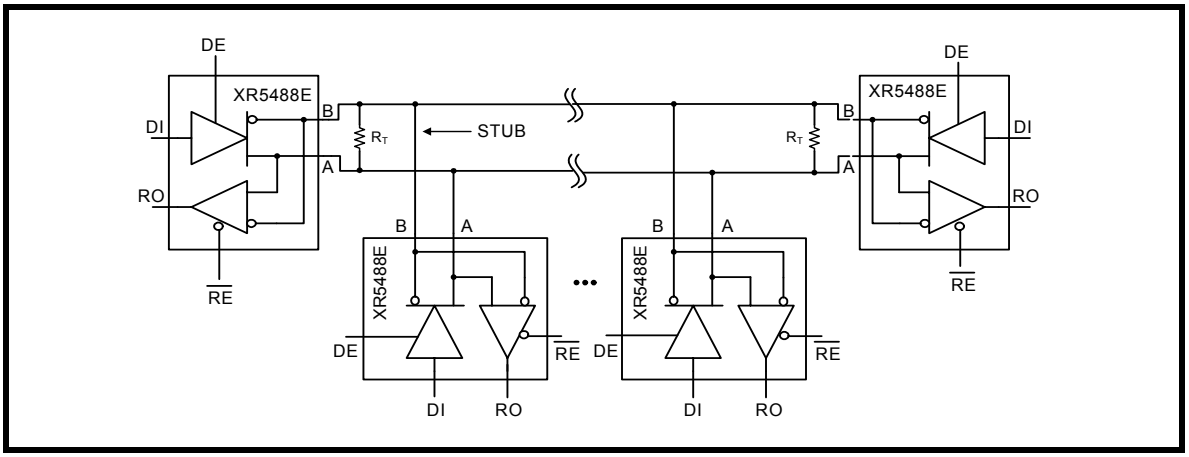

FIGURE 2. PIN OUT ASSIGNMENT

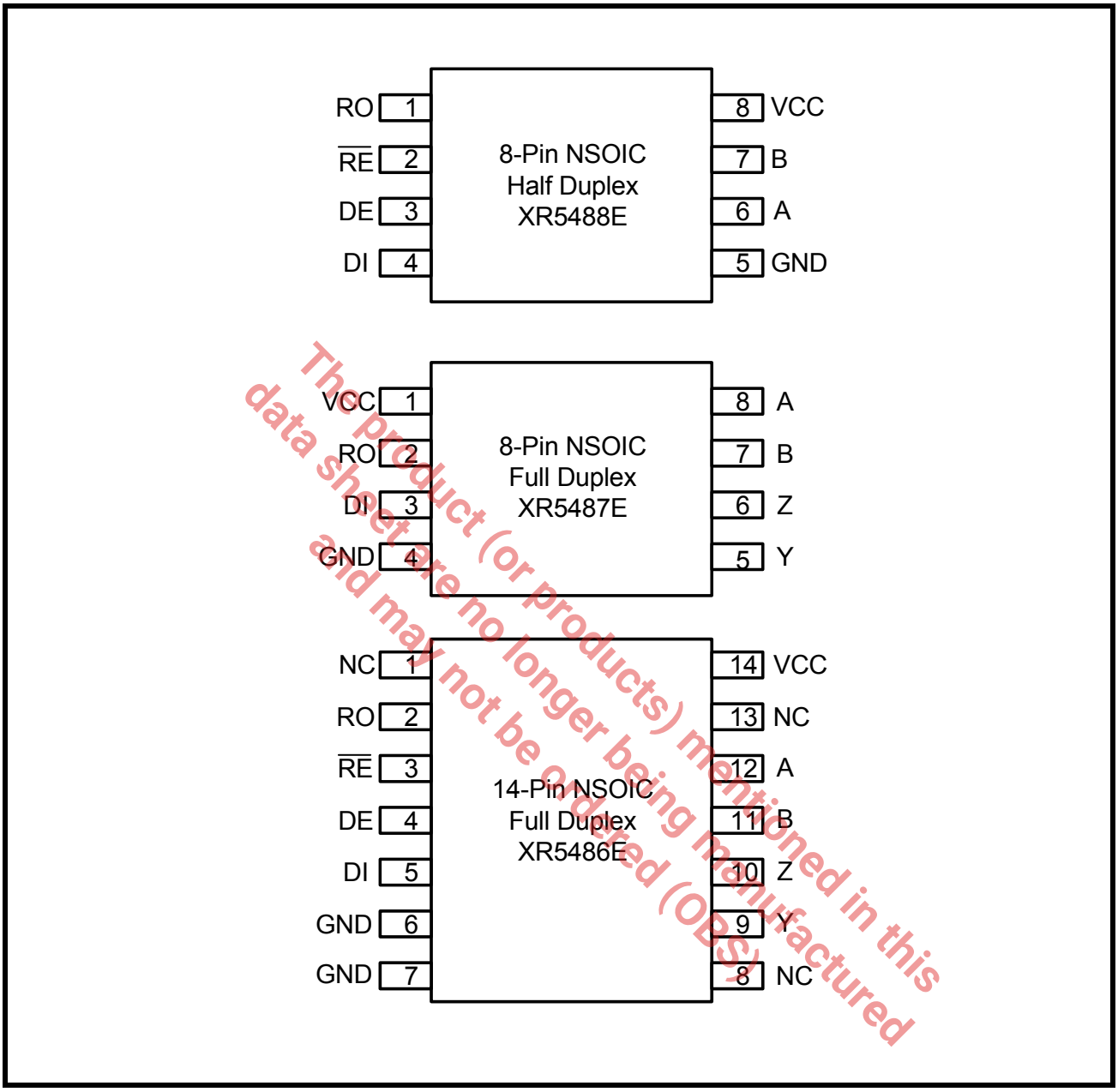

The product (or products) mentioned in this data sheet are no longer being manufactured and may not be ordered (OBS)

ORDERING INFORMATION

PART NUMBER	PACKAGE	OPERATING TEMPERATURE RANGE	DEVICE STATUS
XR5486EID-F	14-pin Narrow SOIC	-40°C to +85°C	Active
XR5487EID-F	8-pin Narrow SOIC	-40°C to +85°C	Active
XR5488EID-F	8-pin Narrow SOIC	-40°C to +85°C	Active

Note: To order Tape and Reel option include "/TR" in ordering part number. All packages are Pb-free/ RoHS compliant.

PIN DESCRIPTIONS

Pin Assignments

PIN NUMBER			PIN NAME	TYPE	DESCRIPTION
HALF DUPLEX	FULL DUPLEX				
XR5488E	XR5487E	XR5486E			
1	2	2	RO	O	Receiver Output. When $\overline{RE}$ is low and if (A-B) ≥ -50mV, RO is High. If (A-B) ≤ -200mV, RO is Low.
2	-	3	$\overline{RE}$	I	Receiver Output Enable. When $\overline{RE}$ is Low, RO is enabled. When $\overline{RE}$ is High, RO is high impedance. $\overline{RE}$ should be High and DE should be low to enter shutdown mode. $\overline{RE}$ is a hot-swap input.
3	-	4	DE	I	Driver Output Enable. When DE is High, outputs are enabled. When DE is low, outputs are high impedance. DE should be low and $\overline{RE}$ should be High to enter shutdown mode. DE is a hot-swap input.
4	3	5	DI	I	Driver Input. With DE high, a low level on DI forces Non-Inverting output low and inverting output high. Similarly, a high level on DI forces Non-Inverting output High and Inverting output Low.
5	4	6, 7	GND	Pwr	Ground.
6	-	-	A	O	Non-Inverting Receiver Input and Non-Inverting Driver Output.
7	-	-	B	O	Inverting Receiver Input and Inverting Driver Output.
8	1	14	Vcc	Pwr	+5.0V power supply input. Bypass with 0.1uF capacitor.
-	8	12	A	I	Non-Inverting Receiver Input.
-	7	11	B	I	Inverting Receiver Input.
-	5	9	Y	O	Non-Inverting Driver Output.
-	6	10	Z	O	Inverting Driver Output.
-	-	1, 8, 13	NC	-	No Connect, not internally connected.

Pin type: I=Input, O=Output.

The product (or products) mentioned in this data sheet are no longer being manufactured and may not be ordered (OBS)

ABSOLUTE MAXIMUM RATINGS

These are stress ratings only and functional operation of the device at these ratings or any other above those indicated in the operation sections to the specifications below is not implied. Exposure to absolute maximum rating conditions for extended periods of time may affect reliability and cause permanent damage to the device.

V_{CC}	Vcc ≤ +7.0V
Input voltage at control pins ($\overline{RE}$, DE)	-0.3V to (V_{CC} + 0.3V)
Driver input voltage (DI)	-0.3V to (V_{CC} + 0.3V)
Receiver output voltage (RO)	-0.3V to (V_{CC} + 0.3V)
Driver output voltage (A, B, Y and Z)	-8V to +13V
Receiver input voltage (A, B)	-8V to +13V
Voltage input range, transient pulse, A, B, Y and Z, through 100Ω, see Figure 19.	+/-65.0V
Storage temperature range	-65°C to + 150°C
Lead temperature	+300°C
Power Dissipation Maximum Junction Temperature 150°C 8-Pin SO θ_{JA} = 128.4°C/W 14-Pin SO θ_{JA} = 86°C/W	

CAUTION:

ESD (Electrostatic Discharge) sensitive device. Permanent damage may occur on unconnected devices subject to high energy electrostatic fields. Unused devices must be stored in conductive foam or shunts. Personnel should be properly grounded prior to handling this device. The protective foam should be discharged to the destination socket before devices are removed.

The product (or products) mentioned in this data sheet are no longer being manufactured and may not be ordered (OBS)

ELECTRICAL CHARACTERISTICS

UNLESS OTHERWISE NOTED: VCC = +5.0V +/-0.25V WITH T_A FROM -40°C TO +85°C. TYPICAL VALUES ARE AT VCC = +5.0V AND 25°C.

SYMBOL	PARAMETERS	MIN	TYP	MAX	UNITS	CONDITIONS
DRIVER DC CHARACTERISTICS						
V_{OD}	Differential Driver Output			Vcc	V	No Load
		2.8				R_L = 100Ω (RS-422), Figure 3
		2.4				R_L = 54Ω (RS-485), Figure 3
		2.4				V_{CM} = -7V, Figure 4
		2.4				V_{CM} = +12V, Figure 4
ΔV_{OD}	Change in Magnitude of Differential Output	-0.20		0.20	V	R_L = 100Ω (RS-422), Figure 3, See note 1
		-0.20		0.20		R_L = 54Ω (RS-485), Figure 3, See note 1
		-0.20		0.20		V_{CM} = -7V, Figure 4, See note 1
		-0.20		0.20		V_{CM} = +12V, Figure 4, See note 1

UNLESS OTHERWISE NOTED: VCC = +5.0V +/-0.25V WITH T_A FROM -40°C TO +85°C. TYPICAL VALUES ARE AT VCC = +5.0V AND 25°C.

SYMBOL	PARAMETERS	MIN	TYP	MAX	UNITS	CONDITIONS
V_{OC}	Driver Common Mode Output Voltage steady state			3.0	V	Figure 3
ΔV_{OC}	Change in Magnitude of Common Mode Output Voltage	-0.2		0.2	V	Figure 3, See note 1
I_{OSD}	Driver Short Circuit Current Limit	-250		250	mA	-7V ≤ V_{OUT} ≤ +12V, Figure 5
I_{OL}	Output Leakage Current (Full-Duplex versions, Y and Z pins)	-75		125	µA	DE = 0V, $\overline{RE}$ = 0V, Vcc = 0V or 5V, -7V ≤ V_{OUT} ≤ +12V
V_{IH}	Logic Input Thresholds (DI, DE, $\overline{RE}$)	2.0			V	Logic Input High
V_{IL}				0.8	V	Logic Input Low
V_{HYS}	Driver Input Hysteresis		100		mV	T_A = 25°C
I_{IN}	Logic Input Current (DI, DE and $\overline{RE}$)	-1		1	µA	0V ≤ IN ≤ +VCC, after first transition
DRIVER AC CHARACTERISTICS						
freq	Data Signaling Rate	52			Mbps	$1/t_{UI}$, Duty Cycle 40 to 60%, Figure 4, C_L = 50pF, R_L = 54Ω.
t_{PLH}	Driver Propagation Delay (Low to High)	4		25	ns	C_L = 50pF, R_L = 54Ω, Figures 6 and 7
t_{PHL}	Driver Propagation Delay (High to Low)	4		25	ns	C_L = 50pF, R_L = 54Ω, Figures 6 and 7
t_R	Driver Rise Time		2	8	ns	C_L = 50pF, R_L = 54Ω, Figures 6 and 7
t_F	Driver Fall time		2	8	ns	C_L = 50pF, R_L = 54Ω, Figures 6 and 7
$\lvert t_{PLH}-t_{PHL} \rvert$	Differential Pulse Skew			+/-3	ns	Figures 6 and 7
t_{ZH}	Driver Enable to Output High			60	ns	C_L = 50pF, R_L = 500Ω, Figures 8 and 9
t_{ZL}	Driver Enable to Output Low			60	ns	C_L = 50pF, R_L = 500Ω, Figures 10 and 11
t_{HZ}	Driver Disable from Output High			60	ns	C_L = 50pF, R_L = 500Ω, Figures 8 and 9
t_{LZ}	Driver Disable from Output Low			60	ns	C_L = 50pF, R_L = 500Ω, Figures 10 and 11
t_{ZV}	Shutdown to Driver Output Valid			1	µs	C_L = 50pF, R_L = 500Ω
t_{SHDN}	Time to Shutdown	50	200	600	ns	Notes 2, 3 and 4

The product (or products) mentioned in this data sheet are no longer being manufactured and may not be ordered (OBS)

UNLESS OTHERWISE NOTED: VCC = +5.0V +/-0.25V WITH T_A FROM -40°C TO +85°C. TYPICAL VALUES ARE AT VCC = +5.0V AND 25°C.

SYMBOL	PARAMETERS	MIN	TYP	MAX	UNITS	CONDITIONS
RECEIVER DC CHARACTERISTICS						
I_{IN}	Input Current (A, B pins)	-75		125	µA	DE = 0, Vcc = 0 or 3.3V V_A or V_B = 12V, other input 0V V_A or V_B = -7V, other input 0V
V_{IH}	Receiver Differential Thresholds (V_A - V_B)			-50	mV	-7V ≤ V_{CM} ≤ +12V, rising
V_{IL}		-200			mV	-7V ≤ V_{CM} ≤ +12V, falling
	Receiver Input Hysteresis		25		mV	V_{CM} = 0V
V_{OH}	Receiver Output Voltage High	Vcc - 1.2			V	I_{OUT} = -8mA, V_{ID} = -50mV
V_{OL}	Receiver Output Voltage Low			0.4	V	I_{OUT} = 8mA, V_{ID} = -200mV
I_{OZ}	High-Z Receiver Output Current			+/-1	µA	$\overline{RE}$ = Vcc, 0.40 ≤ V_{OUT} ≤ +2.4V
I_{OSS}	Receiver Output Short Circuit Current			+/-125	mA	0 ≤ V_{RO} ≤ Vcc
R_{IN}	Receiver Input Resistance	96			KΩ	-7V ≤ V_{CM} ≤ +12V
RECEIVER AC CHARACTERISTICS						
freq	Data Signaling Rate	52			Mbps	$1/t_{UI}$, Duty Cycle 40 to 60%, C_L = 15pF
t_{PLH}	Receiver Propagation Delay (Low to High)		20	30	ns	V_{ID} = +/-2V, C_L = 15pF, Figures 12 and 13
t_{PHL}	Receiver Propagation Delay (High to Low)		20	30	ns	V_{ID} = +/-2V, C_L = 15pF, Figures 12 and 13
skew	Receiver Propagation Delay Skew			+/-3	ns	V_{ID} = +/-2V, C_L = 15pF, Figures 12 and 13 skew = $\lvert t_{PLH}-t_{PHL} \rvert$
t_R	Receiver Output Rise Time		2	4	ns	C_L = 15pF
t_F	Receiver Output Fall Time		2	4	ns	C_L = 15pF
t_{ZH}	Receiver Enable to Output High			40	ns	C_L = 15pF, R_L = 1kΩ, Figures 14 and 15
t_{ZL}	Receiver Enable to Output Low			40	ns	C_L = 15pF, R_L = 1kΩ, Figures 14 and 16
t_{HZ}	Receiver Disable from Output High			40	ns	C_L = 15pF, R_L = 1kΩ, Figures 14 and 17
t_{LZ}	Receiver Disable from Output Low			40	ns	C_L = 15pF, R_L = 1kΩ, Figures 14 and 18
$t_{ZH(SHDN)}$	Shutdown to Receiver Output Valid High			1	µs	C_L = 15pF, R_L = 1kΩ, Figures 14 and 15

The Product (or products) mentioned in this data sheet are no longer being manufactured and may not be ordered (OBS).

UNLESS OTHERWISE NOTED: VCC = +5.0V +/-0.25V WITH T_A FROM -40°C TO +85°C. TYPICAL VALUES ARE AT VCC = +5.0V AND 25°C.

SYMBOL	PARAMETERS	MIN	TYP	MAX	UNITS	CONDITIONS
$t_{ZL(SHDN)}$	Shutdown to Receiver Output Valid Low			1	µs	C_L = 15pF, R_L = 1kΩ, Figures 14 and 16
t_{SHDN}	Time to Shutdown	50	200	600	ns	Notes 2, 3 and 4
POWER REQUIREMENTS AND RECOMMENDED OPERATING CONDITIONS						
Vcc	Supply Voltage	4.75	5.0	5.25	V	
I_{CC1}	Supply Current - Active Mode		800	1500	µA	No Load, DE = $\overline{RE}$ = Vcc or 0V, DI = 0V or Vcc
I_{CC2}	Supply Current - Shutdown Mode			1	µA	DE = 0V, $\overline{RE}$ = Vcc, DI = Vcc or 0V
T_{SD}	Thermal Shutdown Temperature		165		°C	
	Thermal Shutdown Hysteresis		20		°C	
	ESD Protection at Pins A, B, Y and Z pins		+/-15		kV	Human Body Model
			+/-15		kV	IEC-61000-4-2 Air Discharge
			+/-8		kV	IEC-61000-4-2 Contact Discharge
	ESD Protection for RO, DI, DE and $\overline{RE}$ pins		+/-2		kV	Human Body Model
			+/-200		V	Machine Model

The product (or products) mentioned in this data sheet are no longer being manufactured and may not be offered (OBS)

NOTE:

1. *Change in Magnitude of Differential Output Voltage and Change in Magnitude of Common Mode Output Voltage are the changes in output voltage when DI input changes state.*
2. *The transceivers are put into shutdown by bringing $\overline{RE}$ High and DE Low simultaneously for at least 600ns. If the control inputs are in this state for less than 50ns, the device is guaranteed not enter shutdown. If the enable inputs are held in this state for at least 600ns the device is assured to be in shutdown. Note that the receiver and driver enable times increase during shutdown.*
3. *Guaranteed by design and bench characterization.*
4. *Except devices which do not have DE or $\overline{RE}$ inputs.*

FIGURE 3. DRIVER DC TEST CIRCUIT

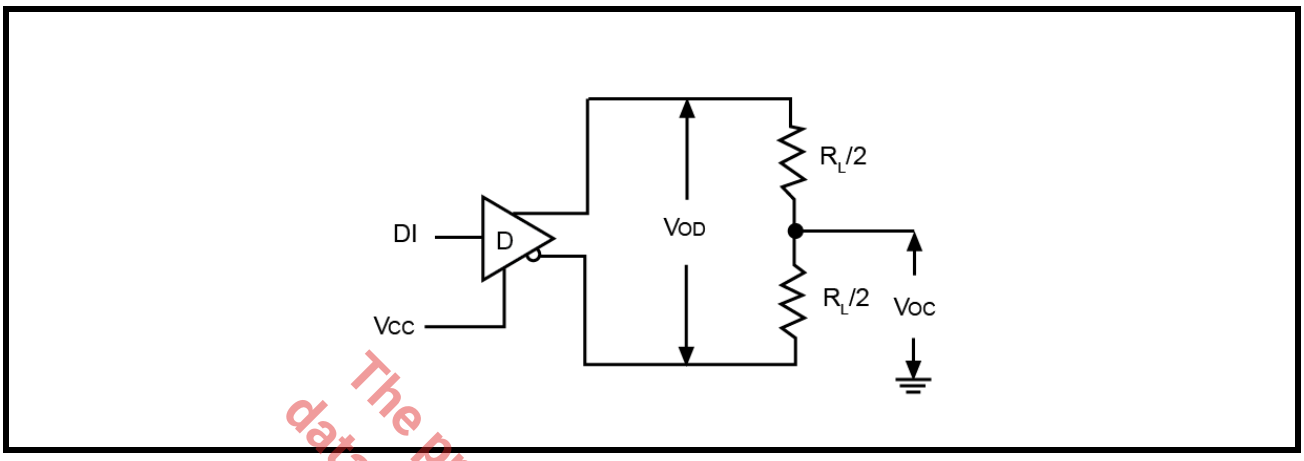

FIGURE 4. DRIVER COMMON MODE LOAD TEST

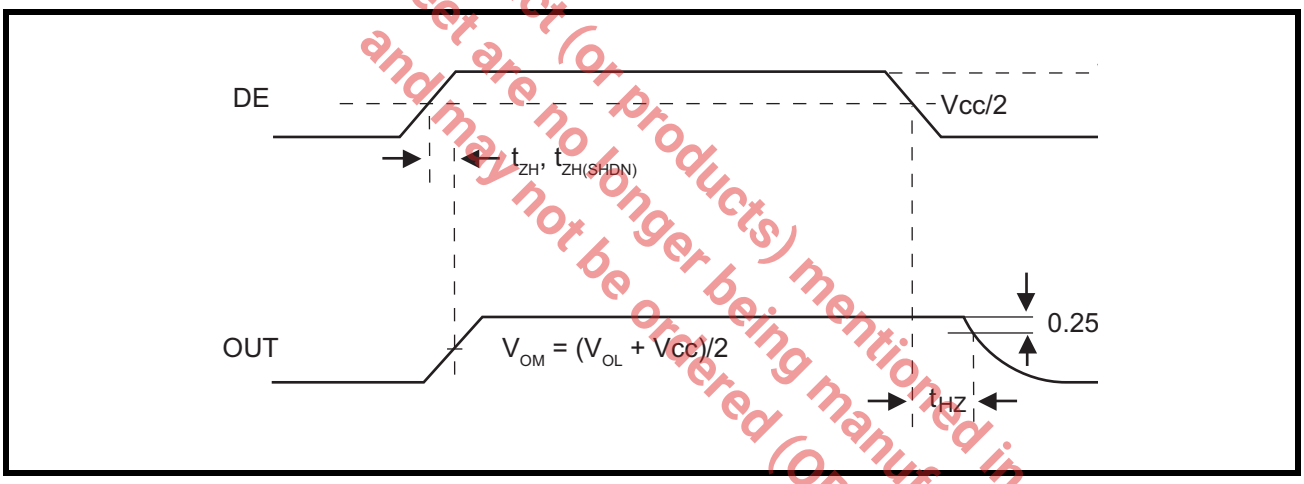

FIGURE 5. DRIVER SHORT CIRCUIT CURRENT LIMIT TEST

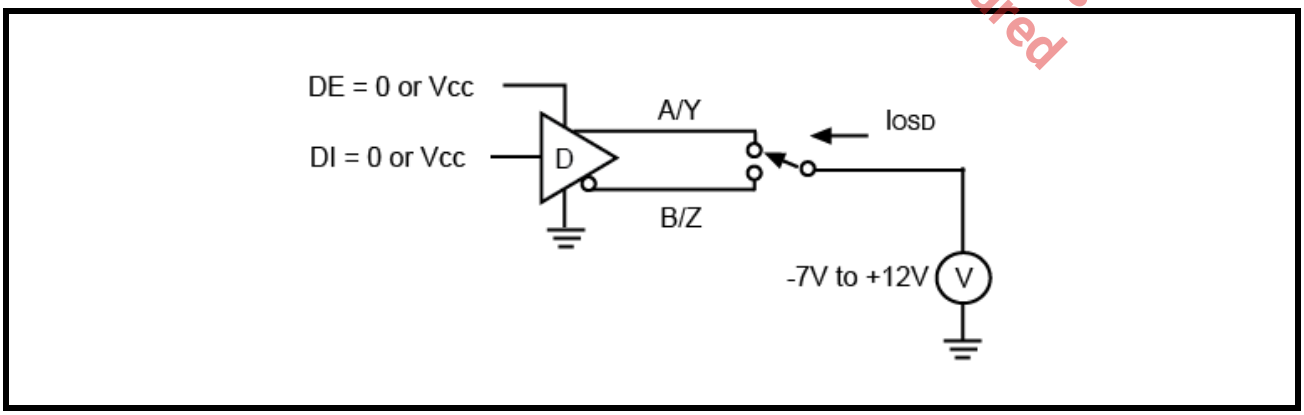

The product (or products) mentioned in this data sheet are no longer being manufactured and may not be ordered (OBS)

FIGURE 6. DRIVER PROPAGATION DELAY TEST CIRCUIT

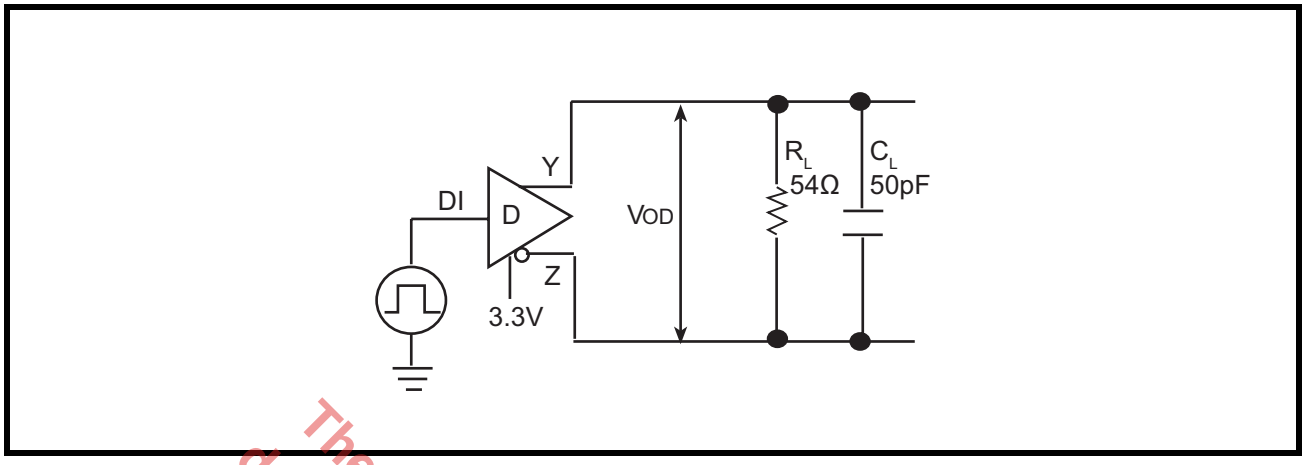

FIGURE 7. DRIVER PROPAGATION DELAY TIMING DIAGRAM

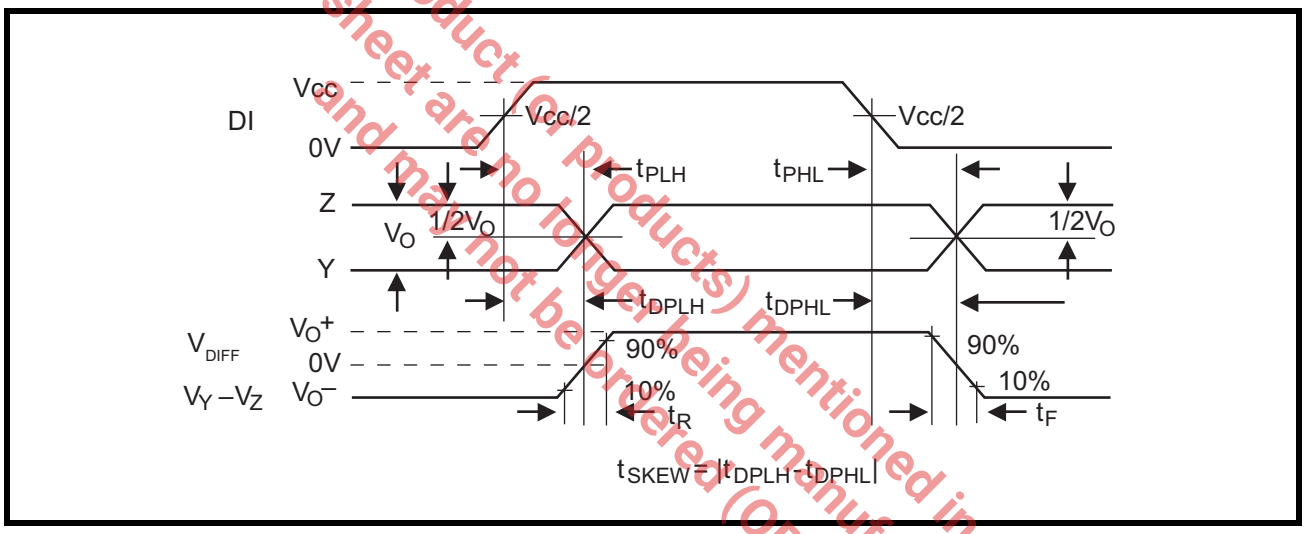

FIGURE 8. DRIVER ENABLE AND DISABLE TIME TEST CIRCUIT 1

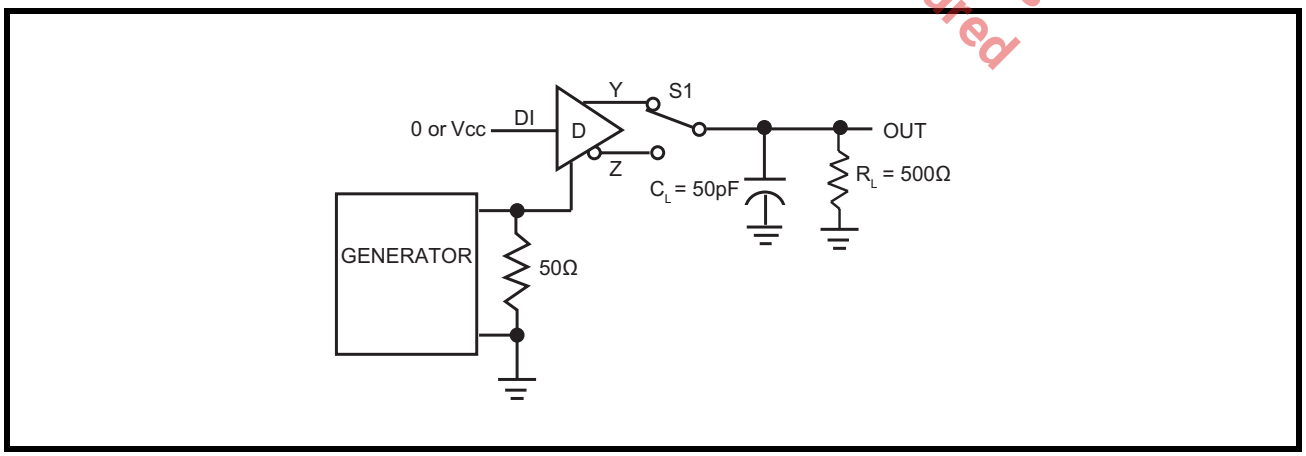

The product (or products) mentioned in this data sheet are no longer being manufactured and may not be ordered (OBS)

FIGURE 9. DRIVER ENABLE DISABLE TIMING DIAGRAM 1

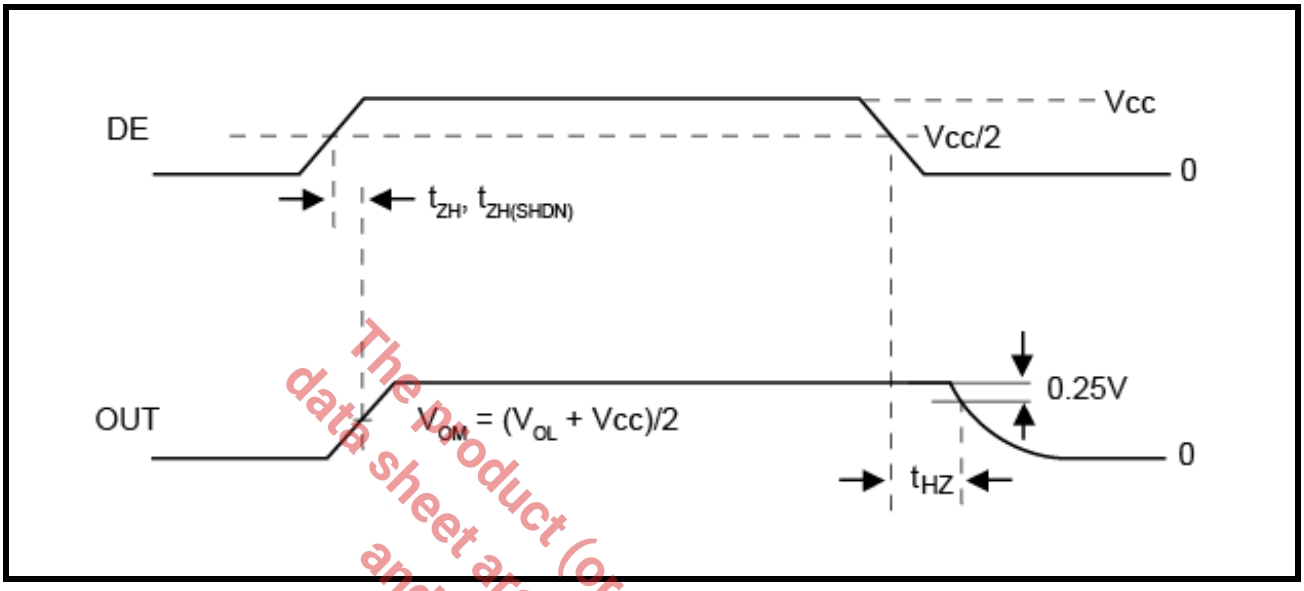

The product (or products) mentioned in this data sheet are no longer being manufactured and may not be ordered (OBS)

FIGURE 10. DRIVER ENABLE AND DISABLE TIME TEST CIRCUIT 2

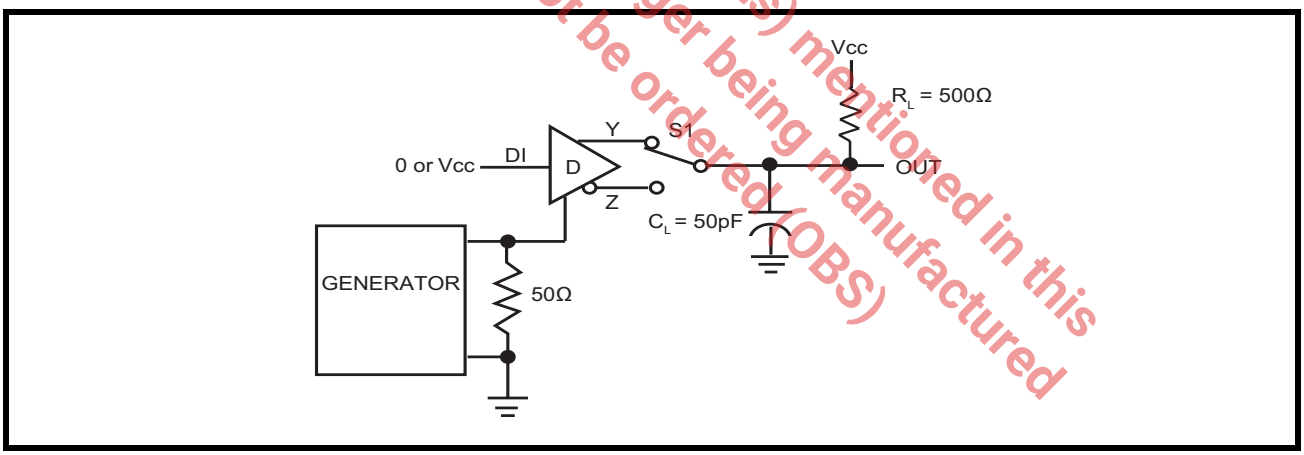

FIGURE 11. DRIVER ENABLE AND DISABLE TIMING DIAGRAM 2

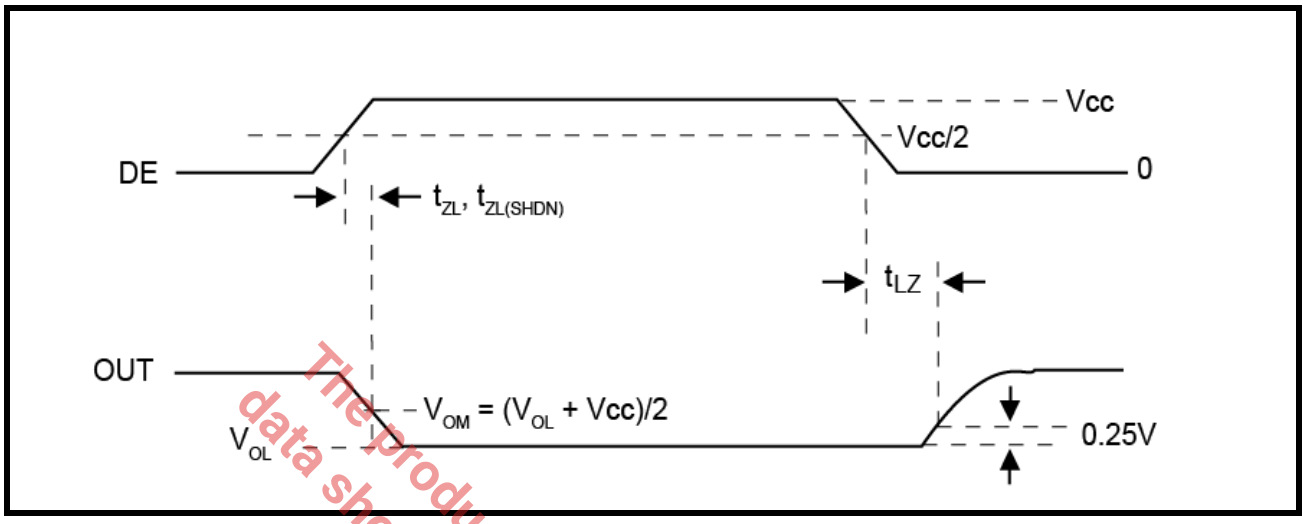

The product (or products) mentioned in this data sheet are no longer being manufactured and may not be ordered (OBS)

FIGURE 12. RECEIVER PROPAGATION DELAY TEST CIRCUIT

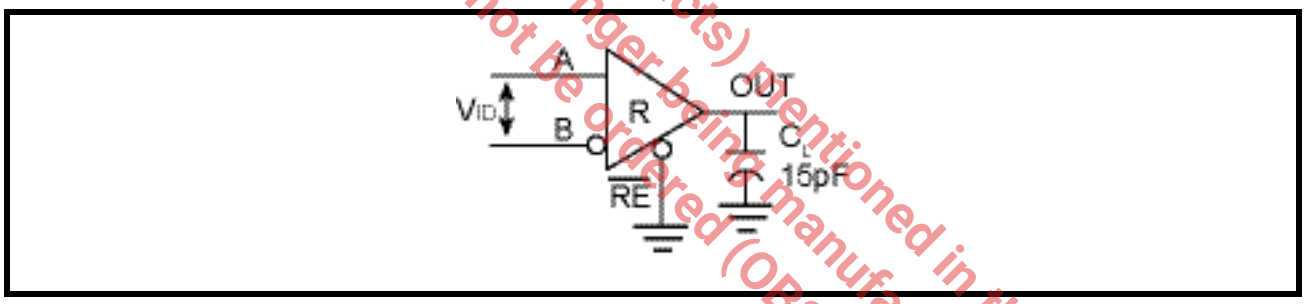

FIGURE 13. RECEIVER PROPAGATION DELAY TIMING DIAGRAM

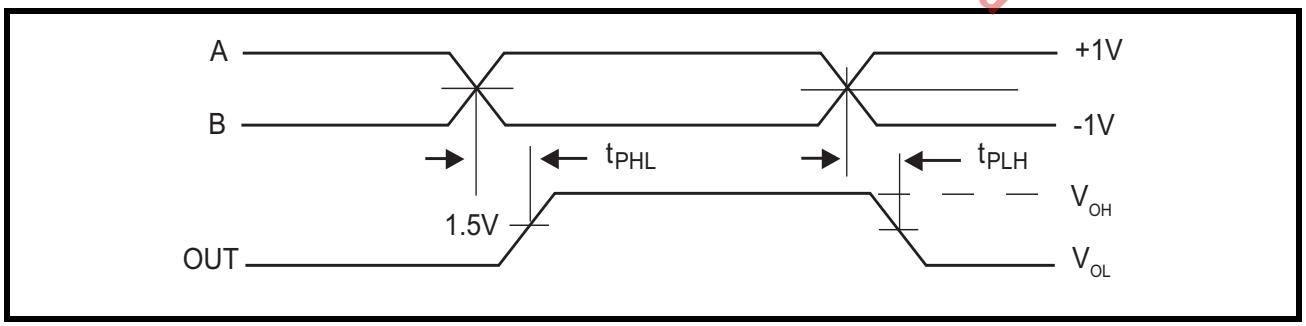

FIGURE 14. RECEIVER ENABLE AND DISABLE TIMES TEST CIRCUIT

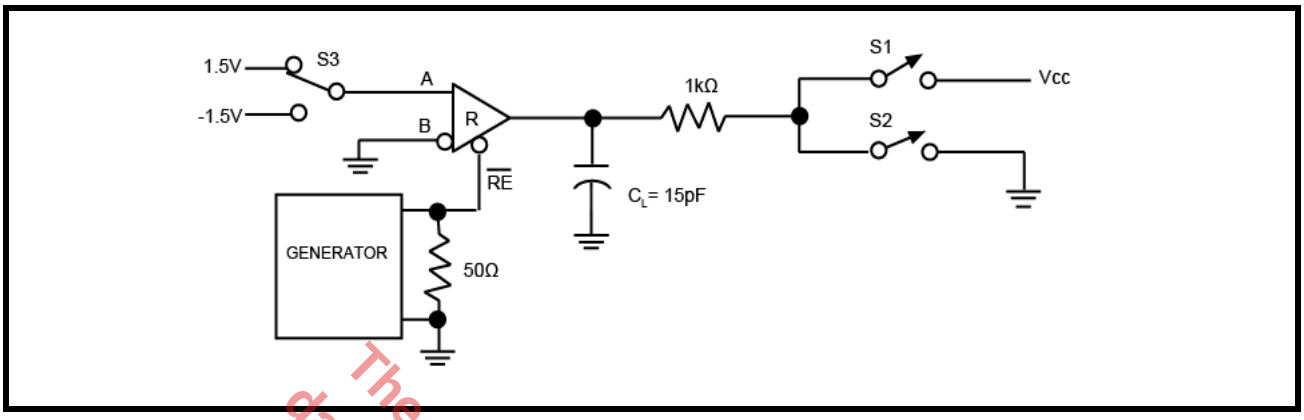

The product (or products) mentioned in this data sheet are no longer being manufactured and may not be ordered (OBS)

FIGURE 15. RECEIVER ENABLE AND DISABLE TIMING DIAGRAM 1

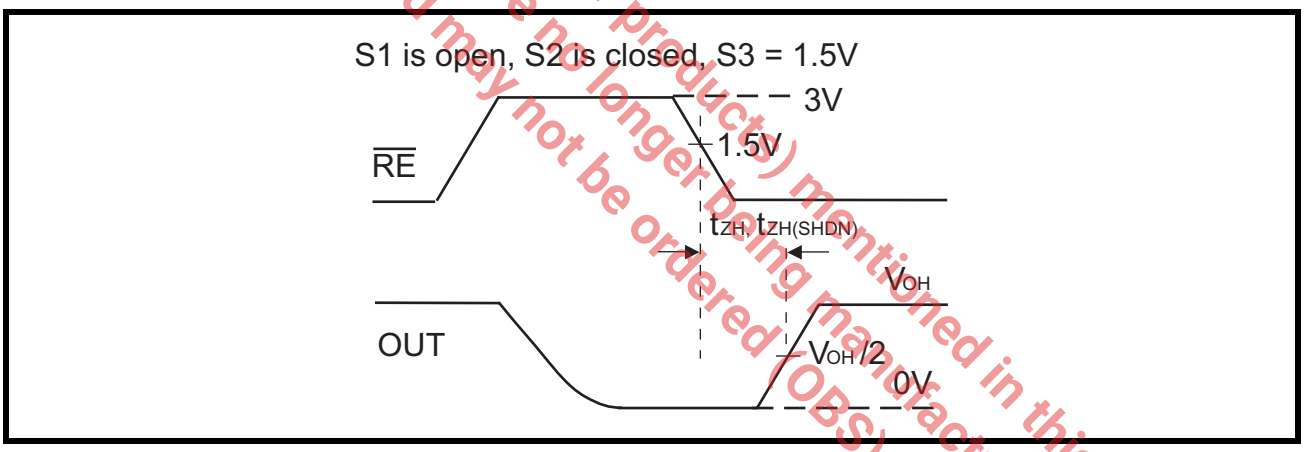

FIGURE 16. RECEIVER ENABLE AND DISABLE TIMING DIAGRAM 2

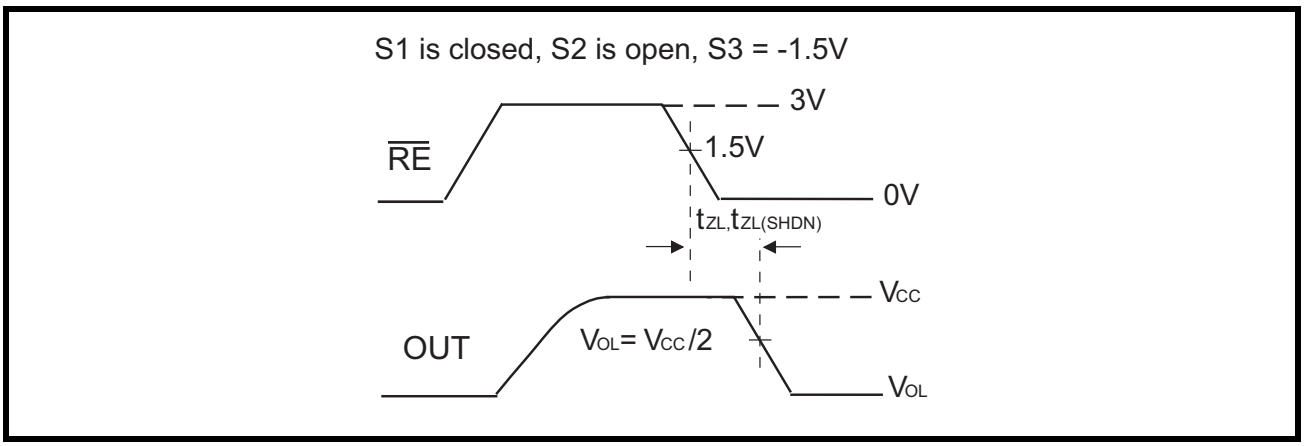

FIGURE 17. RECEIVER ENABLE AND DISABLE TIMING DIAGRAM 3

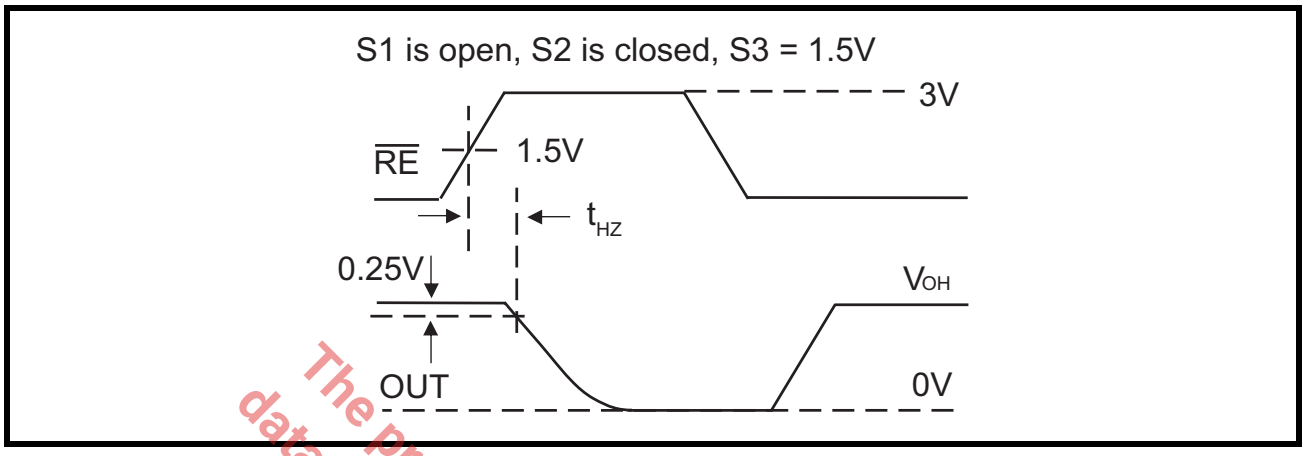

FIGURE 18. RECEIVER ENABLE AND DISABLE TIMING DIAGRAM 4

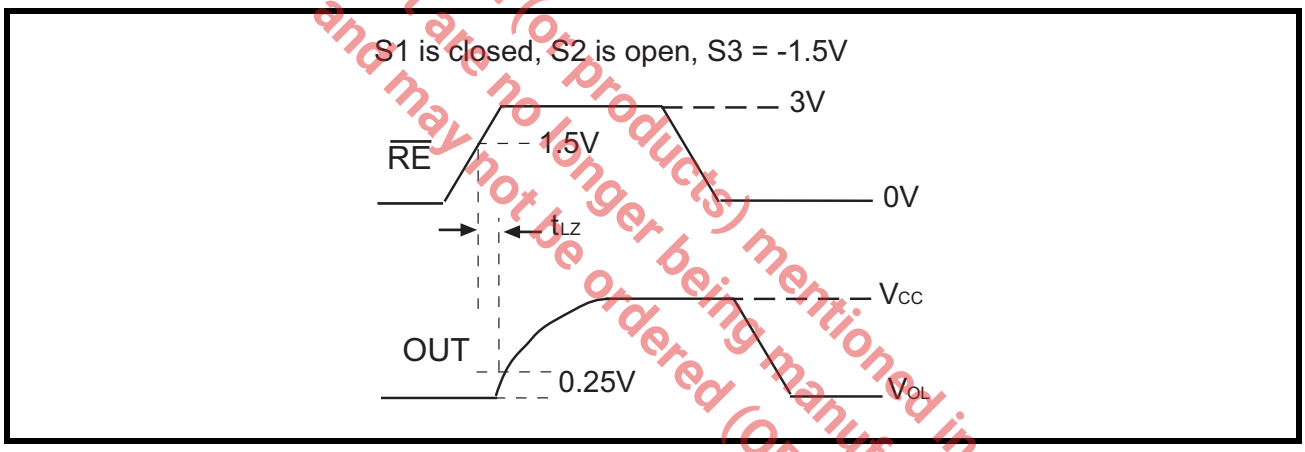

FIGURE 19. TRANSIENT OVER VOLTAGE TOLERANCE TEST CIRCUIT 1

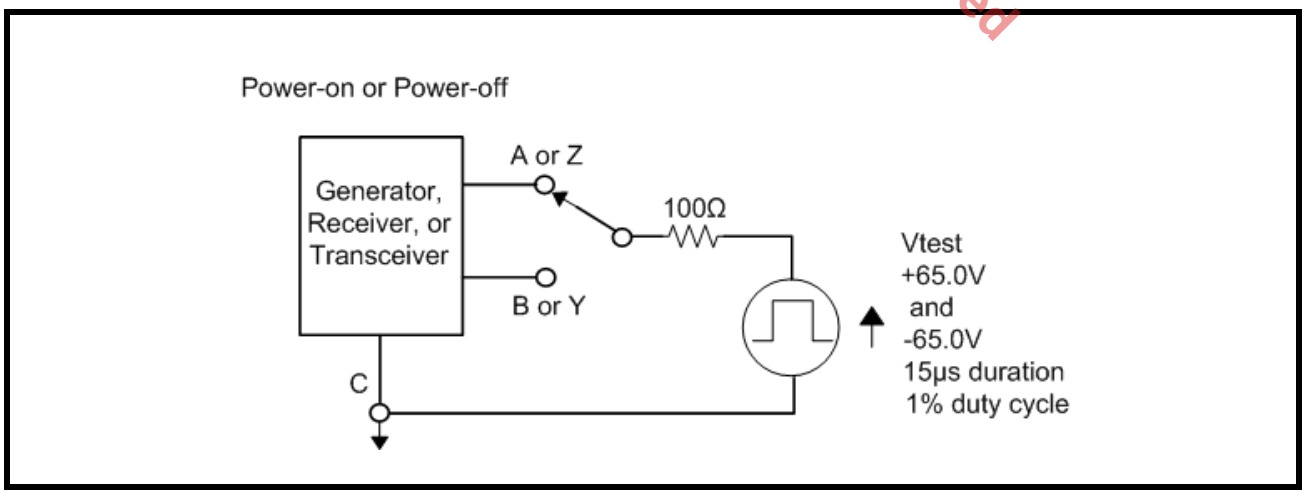

The product (or products) mentioned in this data sheet are no longer being manufactured and may not be ordered (OBS)

1.0 PRODUCT DESCRIPTION

XR5486E-XR5488E is a family of advanced RS-485/RS-422 transceivers. Each contain one driver and one receiver. The XR5488E is a half-duplex design while the XR5486E and XR5487E are full-duplex designs. All devices operate from a single 5.0V power supply. These devices feature failsafe circuitry that guarantees a logic-high receiver output when the inputs are open or shorted, or when they are connected to a terminated transmission line with all drivers disabled. The control pins $\overline{RE}$ and DE feature a hotswap capability allowing live insertion without spurious data transfer. The drivers are not slew rate limited making transmit speeds up to 52Mbps possible. Drivers are output short-circuit current limited. Thermal-shutdown circuitry protects drivers against excessive power dissipation. When activited, the thermal-shutdown circuitry forces the driver outptus into a high-impedance state.

ADVANCED FAILSAFE

Ordinary RS-485 differential receivers will be in an indeterminate state whenever the data bus is not being actively driven. The Advanced Failsafe feature of the XR5486E-XR5488E family guarantees a logic-high receiver output when the receiver inputs are open or shorted, or when they are connected to a terminated transmission line with all drivers disabled. In a terminated bus with all transmitters disabled, the receivers' differential input voltage is pulled to 0V by the termination. The XR5486E-XR5488E family interprets 0V differential as a logic high with a minimum 50mV noise margin while maintaining compliance with the EIA/TIA-485 standard of +/-200mV.

HOT-SWAP CAPABILITY

When a micro-processor or other logic device undergoes its power-up sequence, its logic-outputs are typically at high impedance. In this state they are unable to drive the DE and $\overline{RE}$ signals to a defined logic level. During this period, noise, parasitic coupling or leakage from other devices could cause standard CMOS enable inputs to drift to an incorrect logic level.

If circuit boards are inserted into an energized backplane (commonly called "live insertion" or "hot-swap") power may suddenly be applied to all circuits. Without the hot-swap capability, this situation could improperly enable the transceiver's driver or receiver, driving invalid data onto shared busses and possibly causing driver contention or device damage.

The XR5486E-XR5488E family contains a special power-on-reset circuit that holds the driver enable and receiver enable inactive for approximately 10 microseconds. After this initial power-up sequence the hot-swap circuit becomes transparent and driver enable and receiver enable resume their normal un-skewed functions and timings.

+/-15kV ESD PROTECTION

ESD protection structures are incorporated on all pins to protect against electrostatic discharges encountered during handling and assembly. The driver outputs and receiver inputs of the XR5486E-XR5488E family have extra protection against static electricity. Exar uses state of the art structures to protect these pins against ESD of +/-15kV without damage. The ESD structures withstand high ESD in all states: normal operation, shutdown and powered down. After an ESD event, the XR5486E-XR5488E family keep operating without latch-up or damage.

ESD protection can be tested in various ways. The transmitter outputs and receiver inputs of the XR5486E-XR5488E family are characterized for protection to the following limits:

- +/-15kV using the Human Body Model
- +/-8kV using the Contact Discharge Model
- +/-15kV using the Airgap Discharge Model

ESD TEST CONDITIONS

ESD performance depends on a variety of conditions. Contact Exar for a reliability report that documents test setup, methodology and results.

The product (or products) mentioned in this data sheet are no longer being manufactured and may not be ordered (OBS)

IEC 61000-4-2

The IEC 61000-4-2 standard covers ESD testing and performance of finished equipment. However, it does not specifically refer to integrated circuits. The XR5486E-XR5488E family helps you design equipment to meet IEC 61000-4-2, without sacrificing board-space and cost for external ESD-protection components.

The major differences between tests done using the Human body model and IEC 61000-4-2 is a higher peak current in IEC 61000-4-2. Series resistance is lower in the IEC 61000-4-2 model. Hence, the ESD withstand voltage measured to IEC 61000-4-2 is generally lower than that of human body model.

The air-gap test involves approaching the device with a charged probe. The contact discharge method connects the probe to the device before the probe is energized.

MACHINE MODEL

The machine model for ESD tests all pins using a 200pF storage capacitor and zero discharge resistance. The objective is to emulate the stress caused when I/O pins are contacted by handling equipment during test and assembly.

The product (or product(s) mentioned in this datasheet are no longer being manufactured and may not be ordered (OBS)

256 TRANSCEIVERS ON THE BUS

The standard RS-485 receiver input impedance is 12k Ohms (1 unit load). A standard driver can drive up to 32 unit loads. The XR5486E-XR5488E family of transceivers have only a $1/8^{th}$ unit load receiver input impedance of 96k Ohms, thereby allowing eight times as many, up to 256, transceivers to be connected in parallel on a communication line. Any combination of these devices and other RS-485 transceivers up to a total of 32 unit loads may be connected to the line.

LOW POWER SHUTDOWN MODE

Low-power shutdown mode is initiated by bringing both $\overline{RE}$ high and DE low simultaneously. While in shutdown devices draw only 50nA of supply current. DE and $\overline{RE}$ may be tied together and driven by a single control signal. Devices are guaranteed not to enter shutdown if $\overline{RE}$ is high and DE is low for less than 50ns. If the inputs are in this state for at least 600ns, the parts are shutdown.

Enable times t_{ZH} and t_{ZL} apply when the part is not in low-power shutdown state. Enable times $t_{ZH(SHDN)}$ and $t_{ZL(SHDN)}$ apply when the parts are shutdown. The drivers and receivers take longer to become enabled from low-power shutdown $t_{ZH(SHDN)}$ and $t_{ZL(SHDN)}$ than from driver / receiver disable mode (t_{ZH} and t_{ZL}).

DRIVER OUTPUT PROTECTION

Two mechanisms prevent excessive output current and power dissipation caused by faults or by bus contention. First, a driver current limit on the output stage provides immediate protection against short circuits over the whole common-mode voltage range. Second, a thermal-shutdown circuit forces the driver outputs into a high-impedance state if junction temperature becomes excessive.

LINE LENGTH

The RS-485/RS-422 standard covers line lengths up to 4000ft. Maximum achievable line length is a function of signal attenuation and noise. Termination prevents signal reflections by eliminating the impedance mismatches on a transmission line. Line termination is generaly used if rise and fall times are shorter than the round-trip signal propagation time.

2.0 FUNCTION TABLES

TABLE 1: FULL DUPLEX 14 PIN XR5486E

TRANSMITTING				
Inputs			Outputs	
$\overline{RE}$	DE	DI	Y	Z
X	1	1	1	0
X	1	0	0	1
0	0	X	High-Z	
1	0	X	Shutdown	

The product (or products) mentioned in this data sheet are no longer being manufactured and may not be ordered (OBS)

TABLE 2: FULL DUPLEX 8 PIN XR5487E

TRANSMITTING		
Input	Outputs	
DI	Y	Z
1	1	0
0	0	1

TABLE 3: HALF DUPLEX XR5488E

TRANSMITTING				
Inputs			Outputs	
$\overline{RE}$	DE	DI	A	B
X	1	1	1	0
X	1	0	0	1
0	0	X	High-Z	
1	0	X	Shutdown	

TABLE 4: FULL DUPLEX 14 PIN XR5486E

RECEIVING			
Inputs			Ouptut
$\overline{RE}$	DE	V_A - V_B	RO
0	X	≥ -50mV	1
0	X	≤ -200mV	0
0	X	Open/Shorted	1
1	1	X	High-Z
1	0	X	Shutdown

TABLE 5: FULL DUPLEX 8 PIN XR5487E

RECEIVING	
Inputs	Output
V_A - V_B	RO
≥ -50mV	1
≤ -200mV	0
Open/Shorted	1

TABLE 6: HALF DUPLEX XR5488E

RECEIVING			
Inputs			Output
$\overline{RE}$	DE	V_A - V_B	RO
0	X	≥ -50mV	1
0	X	≤ -200mV	0
0	X	Open/Shorted	1
1	1	X	High-Z
1	0	X	Shutdown

Note: Receiver inputs -200mV < V_A - V_B < -50mV should be considered indeterminate.

The product (or products) mentioned in this data sheet are no longer being manufactured and may not be ordered (OBS)

3.0 PRODUCT SELECTOR GUIDE

TABLE 7: SELECTION GUIDE

PART NUMBER	DUPLEX	DATA RATE MBPS	SHUTDOWN	RECEIVER AND DRIVER ENABLE	TRANS ON BUS	FOOT-PRINT
XR5486E	Full	52	Yes	Yes	256	SN75180
XR5487E	Full	52	No	No	256	SN75179
XR5488E	Half	52	Yes	Yes	256	SN75176

4.0 TYPICAL APPLICATIONS:

The product(or products) mentioned in this data sheet are no longer being manufactured and may not be ordered (OBS)

Half-Duplex Network

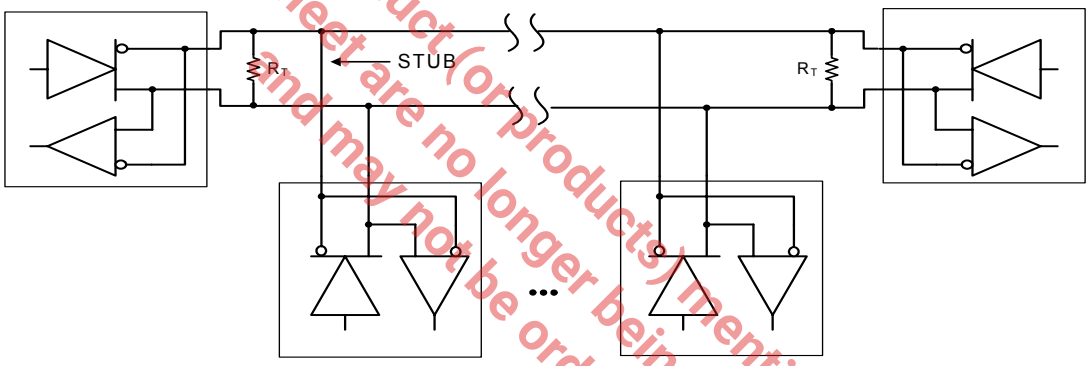

Bi-Directional Full-Duplex Network

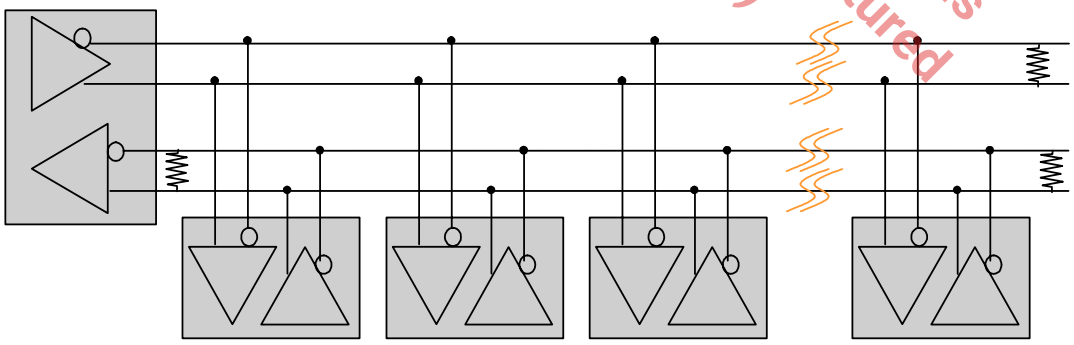

Point to Multi-point with Repeater

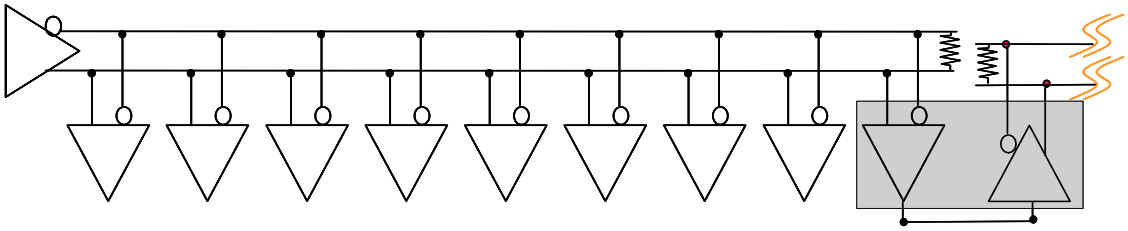

Repeater
(optional)

The product (or products) mentioned in this data sheet are no longer being manufactured and may not be ordered (OBS)

PACKAGE DIMENSIONS (14 PIN NSOIC)

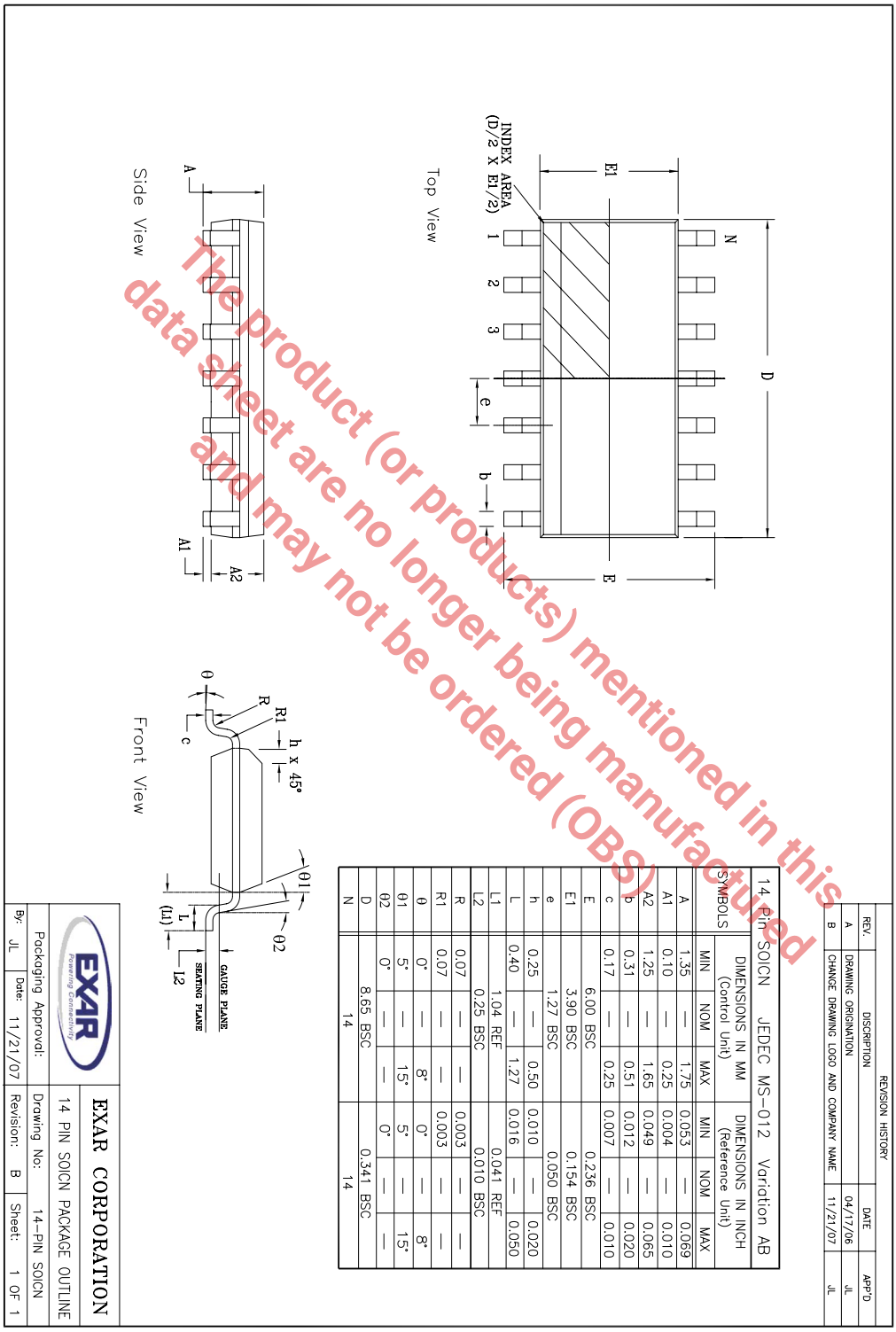

REVISION HISTORY

REV.	DESCRIPTION	DATE	APP'D
A	DRAWING ORIGINATION	04/17/06	JL
B	CHANGE DRAWING LOGO AND COMPANY NAME	11/21/07	JL

14 PIN SOICN JEDEC MS-012 Variation AB

SYMBOLS	DIMENSIONS IN MM (Control Unit)			DIMENSIONS IN INCH (Reference Unit)		
	MIN	NOM	MAX	MIN	NOM	MAX
A	1.35	—	1.75	0.053	—	0.069
A1	0.10	—	0.25	0.004	—	0.010
A2	1.25	—	1.65	0.049	—	0.065
b	0.31	—	0.51	0.012	—	0.020
c	0.17	—	0.25	0.007	—	0.010
E		6.00 BSC			0.236 BSC	
E1		3.90 BSC			0.154 BSC	
e		1.27 BSC			0.050 BSC	
h	0.25	—	0.50	0.010	—	0.020
L	0.40	—	1.27	0.016	—	0.050
L1		1.04 REF			0.041 REF	
L2		0.25 BSC			0.010 BSC	
R	0.07	—	—	0.003	—	—
R1	0.07	—	—	0.003	—	—
θ	0°	—	8°	0°	—	8°
θ1	5°	—	15°	5°	—	15°
θ2	0°	—	—	0°	—	—
D		8.65 BSC			0.341 BSC	
N		14			14	

EXAR CORPORATION

14 PIN SOICN PACKAGE OUTLINE

By:	Date:	Revision:	Drawing No:	Sheet:
JL	11/21/07	B	14-PIN SOICN	1 OF 1

Packaging Approval:

The product (or products) mentioned in this data sheet are no longer being manufactured and may not be ordered (OBS)

PACKAGE DIMENSIONS (8 PIN NSOIC)

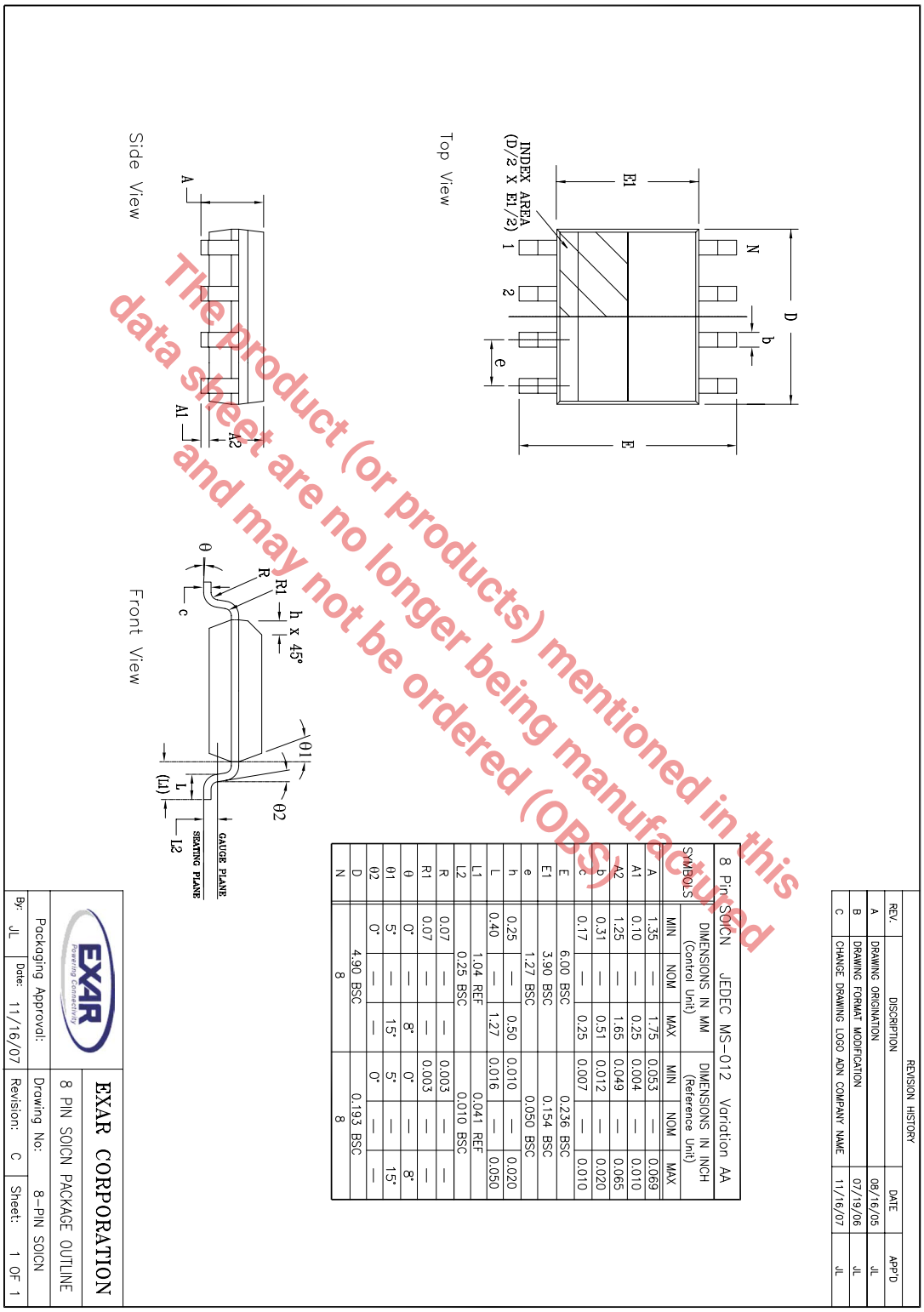

REVISION HISTORY			
REV.	DISCRIPTION	DATE	APP'D
A	DRAWING ORIGINATION	08/16/05	JL
B	DRAWING FORMAT MODIFICATION	07/19/06	JL
C	CHANGE DRAWING LOGO ADN COMPANY NAME	11/16/07	JL

8 Pin SOICN JEDEC MS-012 Variation AA							
SYMBOLS	DIMENSIONS IN MM (Control Unit)			DIMENSIONS IN INCH (Reference Unit)			
	MIN	NOM	MAX	MIN	NOM	MAX
A	1.35	—	1.75	0.053	—	0.069
A1	0.10	—	0.25	0.004	—	0.010
A2	1.25	—	1.65	0.049	—	0.065
b	0.31	—	0.51	0.012	—	0.020
c	0.17	—	0.25	0.007	—	0.010
E		6.00 BSC			0.236 BSC	
E1		3.90 BSC			0.154 BSC	
e		1.27 BSC			0.050 BSC	
h	0.25	—	0.50	0.010	—	0.020
L	0.40	—	1.27	0.016	—	0.050
L1		1.04 REF			0.041 REF	
L2		0.25 BSC			0.010 BSC	
R	0.07	—	—	0.003	—	—
R1	0.07	—	—	0.003	—	—
θ	0°	—	8°	0°	—	8°
θ1	5°	—	15°	5°	—	15°
θ2	0°	—	—	0°	—	—
D		4.90 BSC			0.193 BSC	
N		8			8	

EXAR CORPORATION

8 PIN SOICN PACKAGE OUTLINE

Drawing No: 8-PIN SOICN | Revision: C | Sheet: 1 OF 1

Packaging Approval: By: JL | Date: 11/16/07

The product (or products) mentioned in this data sheet are no longer being manufactured and may not be ordered (OBS).

REVISION HISTORY

DATE	REVISION	DESCRIPTION
November 2009	Rev 1.0.0	Released datasheet.
October 2010	1.0.1	Add PROFIBUS logo to front page
August 2011	1.0.2	Change driver rise and fall time from 2ns minimum to 2ns typical. Add +/-65V Transient over voltage tolerance to ABS Max Ratings and add Figure 19 Transient test circuit.

The product (or products) mentioned in this data sheet are no longer being manufactured and may not be ordered (OBS)

NOTICE

EXAR Corporation reserves the right to make changes to the products contained in this publication in order to improve design, performance or reliability. EXAR Corporation assumes no responsibility for the use of any circuits described herein, conveys no license under any patent or other right, and makes no representation that the circuits are free of patent infringement. Charts and schedules contained here in are only for illustration purposes and may vary depending upon a user's specific application. While the information in this publication has been carefully checked; no responsibility, however, is assumed for inaccuracies.

EXAR Corporation does not recommend the use of any of its products in life support applications where the failure or malfunction of the product can reasonably be expected to cause failure of the life support system or to significantly affect its safety or effectiveness. Products are not authorized for use in such applications unless EXAR Corporation receives, in writing, assurances to its satisfaction that: (a) the risk of injury or damage has been minimized; (b) the user assumes all such risks; (c) potential liability of EXAR Corporation is adequately protected under the circumstances.

Copyright 2011 EXAR Corporation

Datasheet August 2011.

Send your serial transceiver technical inquiries with details to our e-mail hotline: serialtechsupport@exar.com.

Reproduction, in part or whole, without the prior written consent of EXAR Corporation is prohibited.