GENERAL DESCRIPTION

The XRP6840 is a controlled-current dual-cell supercapacitor charger and high power LED driver. Operating from a standard lithium-ion battery, the XRP6840 provides up to 4.3A of programmable Flash LED current and up to 600mA and 5.6V of programmable supercapacitor charging current and voltage.

Architectured around a 2.4MHz tri-mode 1x, 1.5x and 2x charge pump, the XRP6840 charges the stacked supercapacitor to the programmed output voltage with no more than 600mA drawn from the battery. While charging, an internal active balance circuitry insures matching of the stacked capacitors' voltages.

A standard 2-line I²C serial interface allows the dynamic programming of LED currents in torch and flash modes, flash timeout, channel enable, gain control, capacitor charge voltage, and enable. The XRP6840 comes in a 2 and 3 channel version supporting respectively 440mA/2.15A per channel and 300mA/1.45A in torch/flash modes.

The flexibility designed into the XRP6840 can also allow it to reverse the power flow back to the input to prevent unintended system resets as the battery voltage drops.

The XRP6840 is available in a lead-free, "green"/halogen free 20-pin TQFN package.

APPLICATIONS

- **High Power Torch/Strobe/Flash LED**
- **High Resolution Cameras**
- **Generic High Power Lighting**
- **High Power White LED Backlighting**

FEATURES

- **Programmable 4.3A Flash LED Driver**
  - Torch and Flash Modes
  - 2 and 3 Channels Versions
- **Programmable Supercapacitor Charger**
  - 600mA Adjustable Charging Current
  - Programmable Supercapacitor Voltage
  - In-rush Current Control
  - Active Voltage Balance Control
- **Tri-mode Charge Pump Architecture**
  - 1x, 1.5x, 2x Operation Modes
  - 2.4MHz Switching Frequency
- **I²C Serial Interface**
- **Thermal, Over Current and Output Short Protection**
- **LED Short Detection**
- **RoHS Compliant "Green"/Halogen Free 20-pin 4mmx4mm TQFN package**

The Product (or products) mentioned in this datasheet are no longer being manufactured and may not be ordered (OBS)

TYPICAL APPLICATION DIAGRAM

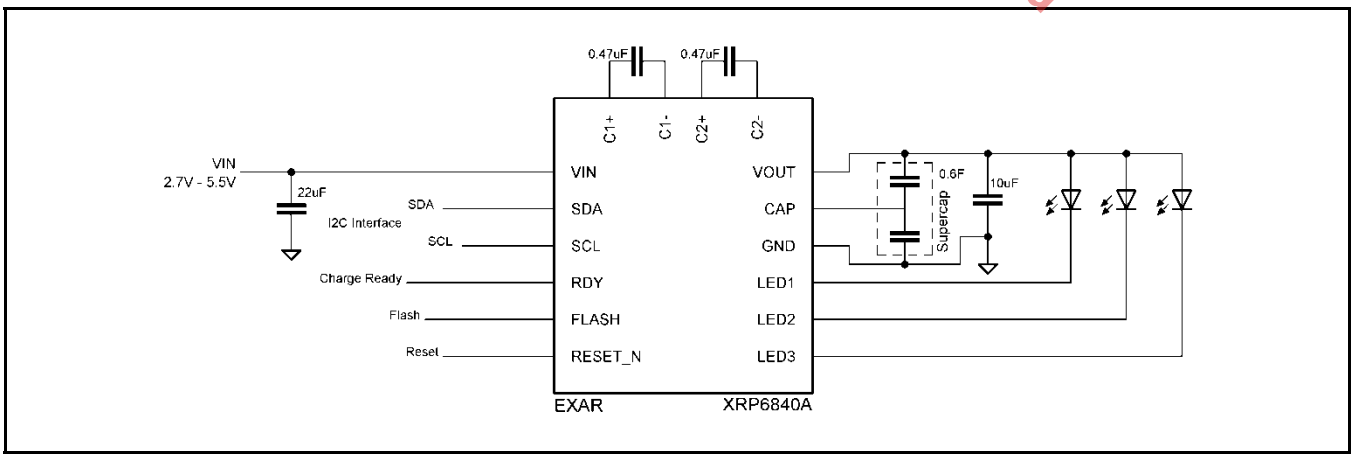

Fig. 1: XRP6840 – 3 Channels Application Diagram

ABSOLUTE MAXIMUM RATINGS

These are stress ratings only and functional operation of the device at these ratings or any other above those indicated in the operation sections of the specifications below is not implied. Exposure to absolute maximum rating conditions for extended periods of time may affect reliability.

V_{IN}, V_{OUT}, LED_1, LED_2, LED_3 ..... -0.3V to 6.0V
SCL, SDA, RDY, RESET_N, CAP ..... -0.3V to V_{IN} +0.3V
C1P, C2P, C1N, C2N ..... -0.3V to V_{IN} +0.3V
Storage Temperature ..... -65°C to 150°C
Power Dissipation ..... Internally Limited (Note 1)
Lead Temperature (Soldering, 10 sec) ..... 260°C
ESD Rating (HBM - Human Body Model) All Pins 2KV

OPERATING RATINGS

Input Voltage Range V_{IN} ..... 2.7V to 5.5V
Junction Temperature Range ..... -40°C to 125°C
Thermal Resistance θ_{JA} ..... 30.8°C/W

The product(s) mentioned in this data sheet are no longer being manufactured and may not be ordered (OBS)

ELECTRICAL SPECIFICATIONS

Specifications with standard type are for T_J = 25°C only; limits in applying over the full Operating Junction Temperature (T_J) range are denoted by a "•". Minimum and Maximum limits are guaranteed through test, design, or statistical correlation. Typical values represent the most likely parametric norm at T_J = 25°C, and are provided for reference purposes only. Unless otherwise indicated, V_{IN} = 3.4V, V_{LED} = 0.8V, C_{IN} = 47µF, C_{F1} = C_{F2} = 0.47µF, C_{OUT1} (V_{OUT} to CAP) = 47µF and C_{OUT2} (CAP to GND) = 47µF. T_A= –40°C to 85°C, T_J = –40°C to 125°C.

Parameter	Min.	Typ.	Max.	Units		Conditions
Operating Input Voltage Range	2.7		5.5	V	•	
UVLO Turn-On Threshold	2.2	2.4	2.6	V	•	V_{IN} rising
UVLO Hysteresis		100		mV		V_{IN} falling
Operating Input Current Including In-rush Current		600	725	mA	•	1x, 1.5x or 2x Mode
Torch Mode Input Current		202	228	mA		1x Mode, I_{OUT} = 200mA
Torch Mode Input Current		302	340	mA		1.5x Mode, I_{OUT} = 200mA
Standby Input Current		30	40	µA		All LEDs are Off, $T_{J(max)}$ = 85°C
Shutdown Supply Current		1	3	µA		R_{ESET_N} = 0V
Shutdown I_{LED} Current		0		mA		STATUS1 Register [B7 B6] =00 Measure LED1 – LED3
Torch Mode Incremental current Step		20		mA		XRP6840A, Table 6, averaged from all channels
		30		mA		XRP6840B, Table 6, averaged from all channels
Flash Mode Incremental current Step		200		mA		XRP6840A, Table 5, averaged from all channels
		300		mA		XRP6840B, Table 5, averaged from all channels
Maximum Current in Torch Mode per Channel		300		mA		XRP6840A, Note 2, averaged from all channels
		440		mA		XRP6840B, Note 2, averaged from all channels
Maximum Current in Flash Mode		4.3		A		Flash Mode, Measured current into all LED pins
Output Current DAC Resolution		3		Bit		Flash Mode
		4		Bit		Torch Mode
DAC Current Accuracy	-10		10	%	•	120mA < I_{LED} < 1.6A for XRP6840A 180mA < I_{LED} < 1.6A for XRP6840B
	-12		12	mA	•	I_{LED} ≤ 120mA, XRP6840A
	-18		18	mA	•	I_{LED} ≤ 180mA, XRP6840B

Parameter	Min.	Typ.	Max.	Units		Conditions
Channel to Channel Current Matching	-3		3	%	•	0mA < I_{LED} < 1.6A Per Channel, Note 3
Switching Frequency	2.0	2.4	2.8	MHz	•	
Equivalent Resistance, 1X Mode		0.5		Ω	•	V_{IN} = 3.7V, I_{OUT} = 200mA
Equivalent Resistance, 1.5X Mode		4	7	Ω	•	V_{IN} = 3.2V, V_{OUT} < V_{OUT_LIMIT}, I_{OUT} = 200mA, Equivalent resistance = [(V_{IN} x 1.5) - V_{OUT}] / I_{OUT}
LEDx Pin Dropout Voltage			0.36	V	•	Flash mode, V_{IN} = 3.4V, I_{LED} = 1A, Measure LED current at 95% $I_{LEDX-NOMINAL}$ at V_{LEDX}=0.8V
LEDx Pin Dropout Voltage			0.1	V	•	Torch mode, V_{IN} = 3.4V, I_{LED} = 80mA, Measure LED current at 95% $I_{LEDX-NOMINAL}$ at V_{LEDX}=0.8V
LED Short Detect Threshold	0.1	0.2	0.4	V	•	V_{OUT} – V_{LED}, LED = 0mA for all DAC code
Thermal Regulation			0.01	%/°C		
Thermal Shutdown Temperature		150		°C		Driver turn OFF
Thermal Shutdown Hysteresis		10		°C		Driver turn ON
Output Voltage Regulation (OVR)	5.2	5.3	5.4	V	•	Flash Mode, I_{LED} = 0mA, V_{OUT} Rising STATUS2 Register: [B7 B6 B5] = 101 OVR value is set by STATUS2 register between 4.55V – 5.6V, all setting have +/- 100mV tolerance
Output Voltage Regulation Hysteresis		50		mV		Flash Mode, I_{LED} = 0mA
RDY Pin Output Trip Threshold		V_O – 0.1		V		STATUS2 Register: [B7 B6 B5] = 101 100mV below actual OVR value.
RDY Pin Sink Current	1			mA	•	
SDA, SCL, RESET_N, FLASH Input Logic Low Voltage			0.4	V	•	
SDA, SCL, RESET_N, FLASH Input Logic High Voltage	1.6			V	•	
Turn-Off Time (T_{OFF}) Into Shutdown				50 µs		RDY goes low when RESET_N goes from high top low
Flash Time Duration Before Standby	0.09	0.11	0.13	s	•	STATUS1 register [B1 B0]=00
	0.18	0.22	0.26	s	•	STATUS1 register [B1 B0]=01
	0.43	0.53	0.63	s	•	STATUS1 register [B1 B0]=10
	0.9	1.1	1.3	s	•	STATUS1 register [B1 B0]=11

The product (or products) mentioned in this data sheet are no longer being manufactured and may not be ordered (OBS)

I²C SPECIFICATIONS

I²C ADDRESSING FORMAT

S	XRP6840 Address	R/W	A	Status Data	A	LED1 Data	A	LED2 Data	A	LED3 Data	A	SP
	7-bit	1/0		8-bit		8-bit		8-bit		8-bit		

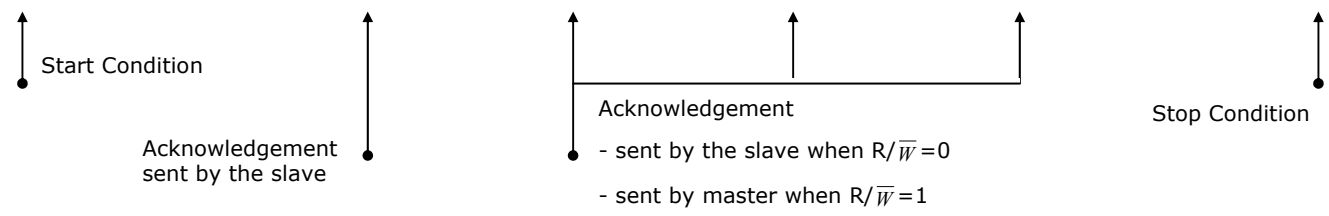

Fig. 2: I²C Data Input Format

Default I²C slave 7-bit address for XRP6840 is 0101000b

I²C TIMING CHARACTERISTICS

V_{IN} = 3.3V, T_A = –40°C to 85°C, T_J = –40°C to 125°C. Unless otherwise noted.

Parameter	Symbol	Min.	Typ.	Max.	Units	Conditions
Serial Clock Frequency	f_{SCL}			400	KHz	
Bus Free Time between a STOP and a START	t_{BUF}	1.3			µs	
Hold Time, Repeated START Condition	t_{HD_STA}	0.6			µs	
STOP Condition Setup Time	$t_{SU,STO}$	0.6			ms	
Data Hold Time	$t_{HD,DAT(OUT)}$	225		900	ns	
Input Data Hold Time	$t_{HD,DAT(IN)}$	0		900	ns	
Data Setup Time	$t_{SU,DAT}$	100			ns	
SCL Clock Low Period	t_{LOW}	1.3			ms	
SCL Clock High Period	t_{HIGH}	0.6			ms	
Rise Time of Both SDA and SCL Signals, receiving	t_R	20 + 0.1Cb		300	ns	Note 4,5
Fall Time of Both SDA and SCL Signals, Receiving	t_F	20 + 0.1Cb		300	ns	Note 4,5
Fall Time of SDA Transmitting	$t_{F.TX}$	20 + 0.1Cb		250	ns	Note 4,5,6
Pulse Width of Spike Suppressed	t_{SP}	0		50	ns	Note 7
Capacitive Load for each Bus Line	Cb			400	pF	Note 4
I²C Startup Time after UVLO clears	t_{SRT}			1	µs	Note 4

Note 1: All parameter tested at T_A = 25°C. Specifications over temperature are guaranteed by design.
Note 2: Current into all LED pins is up to 400mA continuously in Torch 1.5x mode.
Note 3: LED current matching is calculated by this equation:
$\frac{I_{LED}-I_{AVG}}{I_{AVG}} \times 100\%$ where I_{AVG} is the average current of all channels.
Note 4: Guaranteed by design.
Note 5: Cb = total capacitance of one bus line in pF. tR and tF measured between 0.3 x V_{DD} and 0.7 x V_{DD}.
Note 6: I_{SINK} ≤6mA. Cb =total capacitance of one bus line in pF. t_R and t_F measured between 0.3 x V_{DD} and 0.7 V_{DD}.
Note 7: Input filters on the SDA and SCL inputs suppress noise spikes less than 50ns.

The product (or products) mentioned in this data sheet are no longer being manufactured and may not be ordered (OBS)

BLOCK DIAGRAM

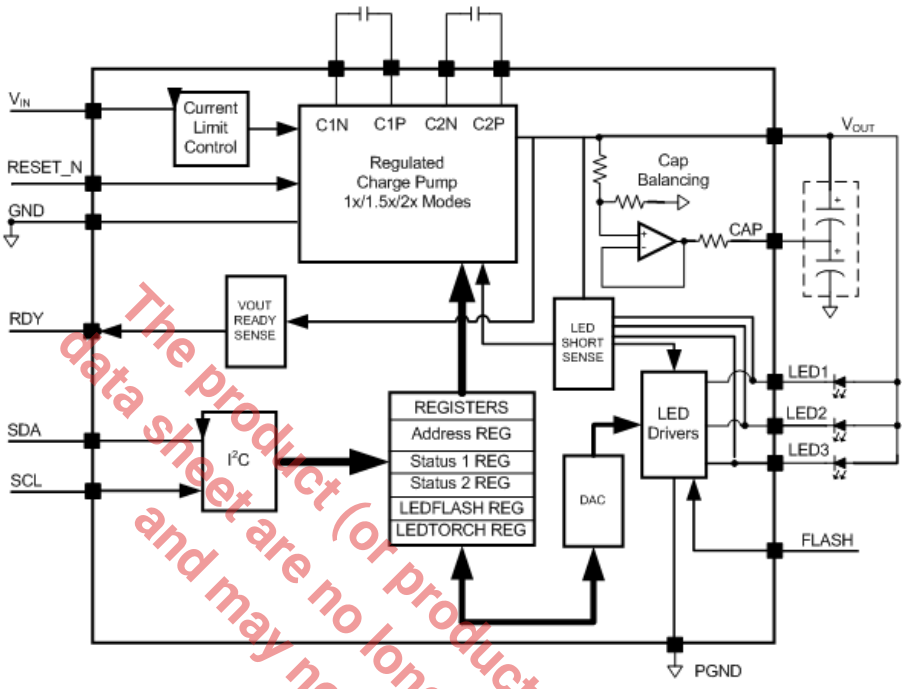

The product (or products) mentioned in this data sheet are no longer being manufactured and may not be ordered (OBS)

Fig. 3: XRP6840 Block Diagram (XRP6840A Shown)

PIN ASSIGNEMENT

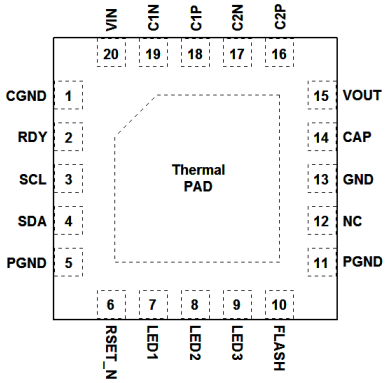

XRP6840A – 3 Channel Version

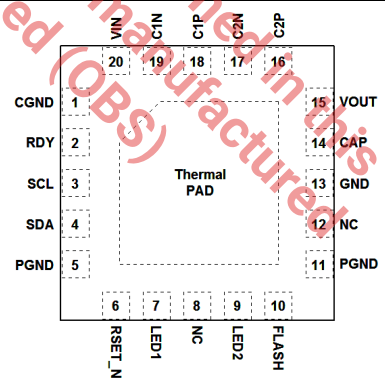

XRP6840B – 2 Channel Version

Fig. 4: XRP6840 Pin Assignment

PIN DESCRIPTION

Name	Pin Number	Description
C_{GND}	1	Charge pump ground pin.
RDY	2	Active high push-pull output. RDY is high when V_{OUT} reached to 100mV below its V_{OUT_LIMIT} voltage. The V_{OUT_LIMIT} for Flash mode is determined by STATUS2 register [B7 B6 B5]. The V_{OUT_LIMIT} for Torch mode is 4.50V.
SCL, SDA	3, 4	The SDA and SCL pins connect to the I²C bus. Multiple functions can be programmed through his interface. They can also be used for read-back.
P_{GND}	5, 11	Power ground pin. The Source of internal NMOS is connected to this pin.
RESET_N	6	Active Low input pin. If RESET_N = 0, then XRP6840 is in Shut-down mode If RESET_N = 0 and STATUS1 register [B5] = 0, then reset all registers to logic low. If RESET_N = 0 and STATUS1 register [B5] = 1, then all bits of all registers will be saved.
LED_1, LED_2, LED_3 (XRP6840A)	7, 8, 9	LED_1, LED_2, LED_3 connect to the drain of the internal NMOS which are current sources for LED current. These current sources are controlled by LEDFLASH or LEDTORCH registers which is programmed through I²C to provide the Torch and Flash current for the LEDs. LED_1, LED_2, LED_3 pins can be connected together to provide higher LED current. If a pin is not used connect it to V_{OUT}. The XRP6840 incorporates a short LED protection circuit which shut-down LED current if LED voltage approaches to V_{OUT_LIMIT}.
LED_1, NC, LED_2 (XRP6840B)	7, 8, 9	
FLASH	10	Digital Input pin. Active high. If STATUS1 register [B7 B6] = 11 and FLASH = 1 then LEDs are ON for one Flash timeout duration. Flash Timeout duration is controlled by STATUS1 register [B1 B0].
NC	12	No connection. This pin can be connected to P_{GND} pin for heat sink.
GND	13	Ground pin. This ground pin doesn't carry high internal current.
CAP	14	This pin is the output of an internal Op-Amp. This internal Op-Amp is powered by V_{OUT}. The output voltage is half of V_{OUT}, and output resistance is 470Ω. The sink and source current is limited by 470Ω output resistance. This provides active balancing between two internal sections of the super capacitor.
V_{OUT}	15	Output voltage. Connect positive terminal of SuperCap here. Connect the LEDs between this pin and the corresponding internal current source. Decouple with 10µF ceramic capacitor close to the pins of the IC.
C_{2P}, C_{2N}	16, 17	Connect C_2 external flying capacitor between these pins.
C_{1P}, C_{2P}	18, 19	Connect C_1 external flying capacitor between these pins.
V_{IN}	20	Power supply input. Decouple with 10µF ceramic capacitor close to the pins of the IC.
Thermal Pad	-	Connect thermal pad to P_{GND} pins.

The product (or product variation) mentioned in this data sheet is no longer being manufactured and may not be ordered (OBS)

ORDERING INFORMATION

Part Number	Junction Temperature Range	Marking	Package	Packing Quantity	Note 1	Note 2
XRP6840AILB-F	-40°C≤T_A≤+125°C	6840AI YYWWX	20-pin TQFN	Bulk	RoHS Compliant/ Halogen Free	3 Channels
XRP6840AILBTR-F	-40°C≤T_A≤+125°C	6840AI YYWWX	20-pin TQFN	3K/Tape & Reel	RoHS Compliant/ Halogen Free	3 Channels
XRP6840BILB-F	-40°C≤T_A≤+125°C	6840BI YYWWX	20-pin TQFN	Bulk	RoHS Compliant/ Halogen Free	2 Channels
XRP6840BILBTR-F	-40°C≤T_A≤+125°C	6840BI YYWWX	20-pin TQFN	3K/Tape & Reel	RoHS Compliant/ Halogen Free	2 Channels
XRP6840EVB	XRP6840 Evaluation Board – XRP6840A based.					

"YY" = Year – "WW" = Work Week – "X" = Lot Number

TYPICAL PERFORMANCE CHARACTERISTICS

All data taken at V_{IN} = 2.7V to 5.5V, $T_J = T_A$ = 25°C, unless otherwise specified - Schematic and BOM from Application Information section of this datasheet.

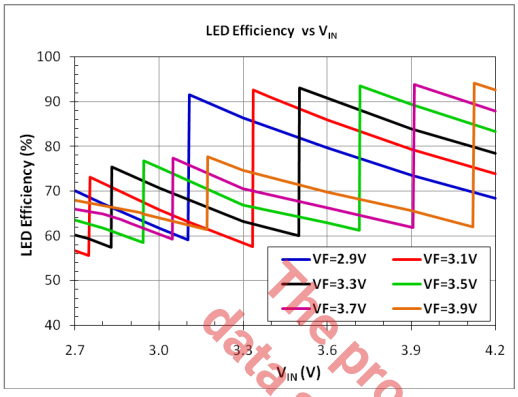

Fig. 5: High Efficiency Torch Mode I_{LED} at 200mA no supercap

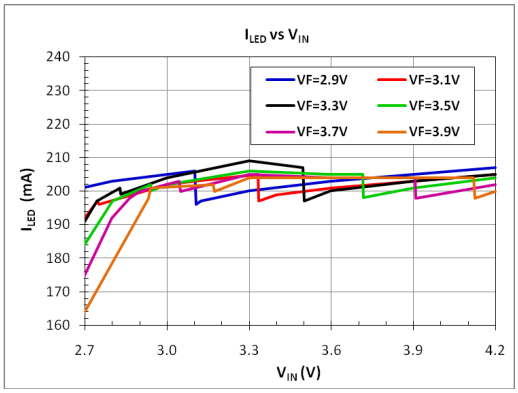

Fig. 6: High Efficiency Torch Mode, LED Current versus V_{IN} no supercap

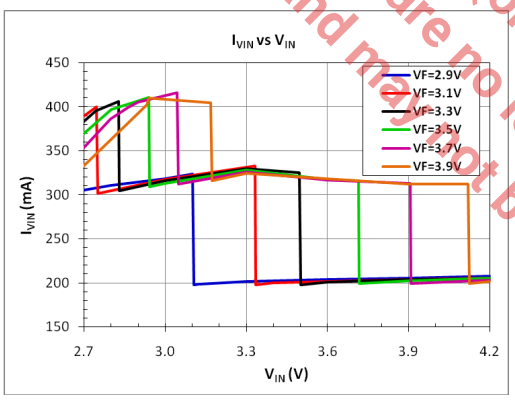

Fig. 7: High Efficiency Torch Mode, Input Current versus V_{IN} I_{LED} at 200mA, no supercap

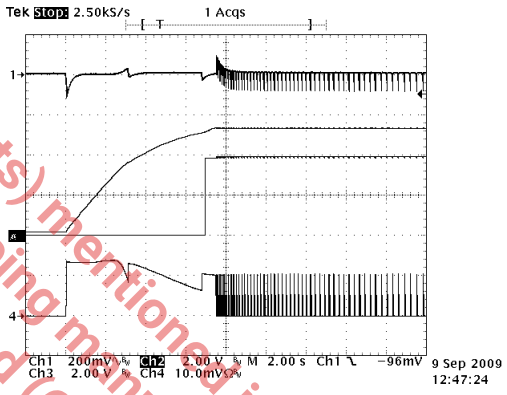

Fig. 8: VOUT RDY: 0.6F Supercap, CH1 = V_{IN}, CH2 = V_{OUT}, CH3 = RDY, CH4 = I_{VIN} =0.5A/div

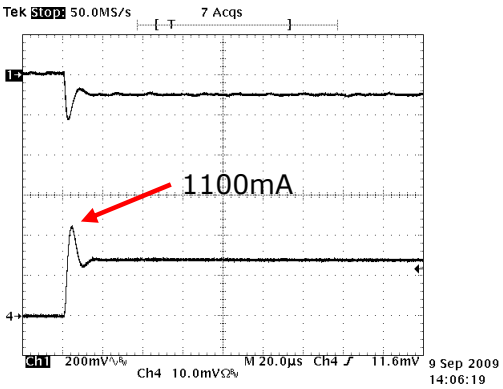

Fig. 9: In-rush Current with Li-ion Battery 0.6F Supercap, C_{IN}=10µF CH1 = V_{IN}, CH4 = I_{VIN} =0.5A/div

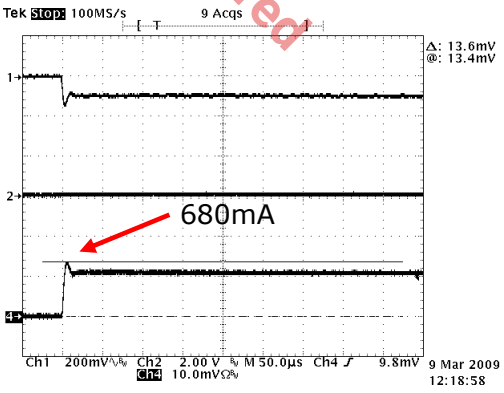

Fig. 10: In-rush Current, 0.6F Supercap, C_{IN} = 22µF, CH1 = V_{IN}, CH4 = I_{VIN} =0.5A/div

The product (or products) mentioned in this data sheet are no longer being manufactured and may not be ordered (OBS)

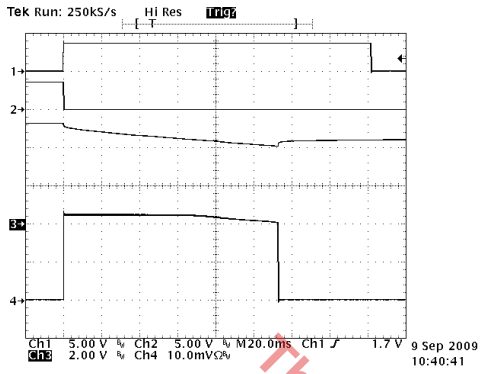

Fig. 11: 0.11s Flash Duration with 0.55F Supercap at 4.3A, LED V_F < 3.8V, CH1 = FLASH, CH2 = RDY, CH3 =V_{OUT}, CH4 = I_{LED} =2A/div

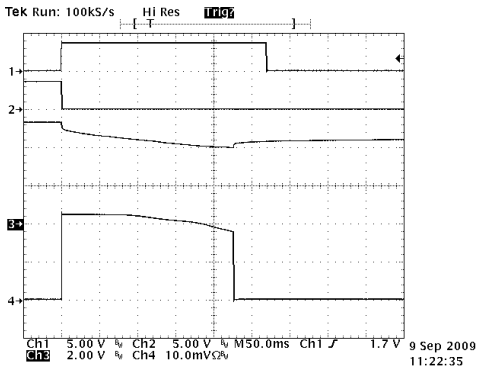

Fig. 12: 0.22s Flash Duration with 0.9F Supercap at 4.3A, LED V_F < 3.8V, CH1 = FLASH, CH2 = RDY, CH3 =V_{OUT}, CH4 = I_{LED} =2A/div

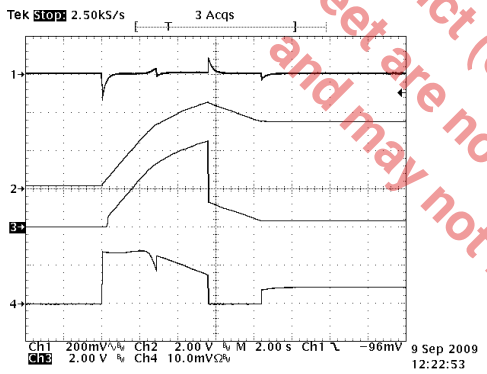

Fig. 13: 200mA High Efficiency Torch Mode with 0.55F Supercap, CH1=V_{IN}, CH2=V_{OUT}, CH3=LED_X, CH4=I_{VIN} =0.5A/div

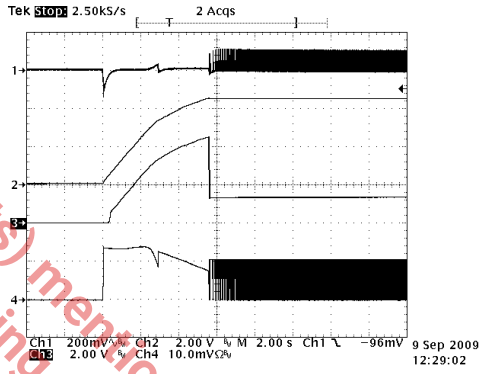

Fig. 14: 200mA Torch Mode with 0.55F Supercap, CH1=V_{IN}, CH2=V_{OUT}, CH3=LED_X, CH4=I_{VIN} =0.5A/div

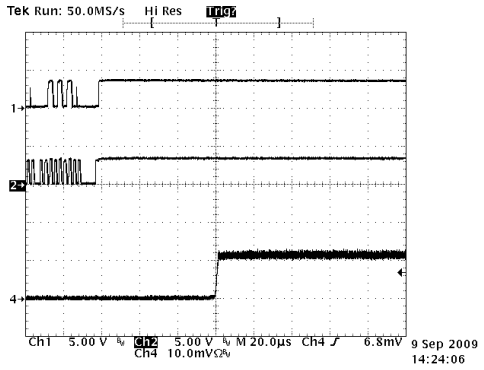

Fig. 15: LED Current Settling Time: 0mA to 100mA. CH1=SDA, CH2=SCL, CH4=I_{LED}=0.1A/div

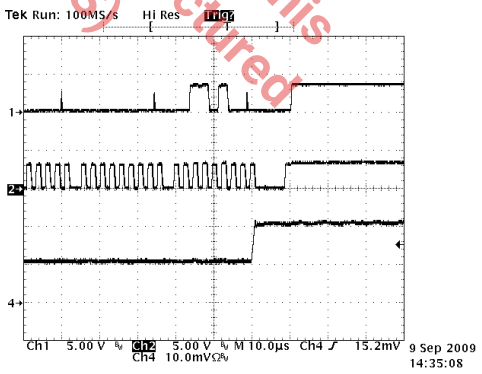

Fig. 16: LED Current Settling Time: 100mA to 200mA. CH1=SDA, CH2=SCL, CH4=I_{LED}=0.1A/div

The product (or products) mentioned in this data sheet are no longer being manufactured and may not be ordered (OBS)

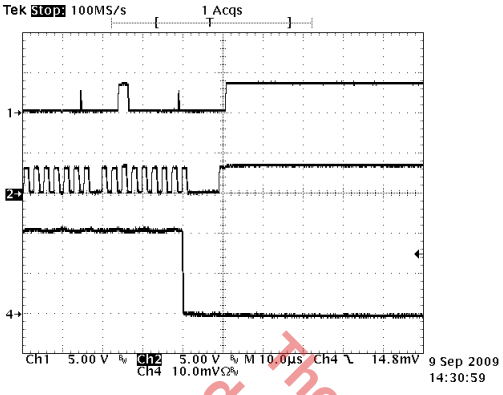

Fig. 17: LED Current Settling Time: 200mA to 0mA. CH1=SDA, CH2=SCL, CH4=I_{LED}=0.1A/div

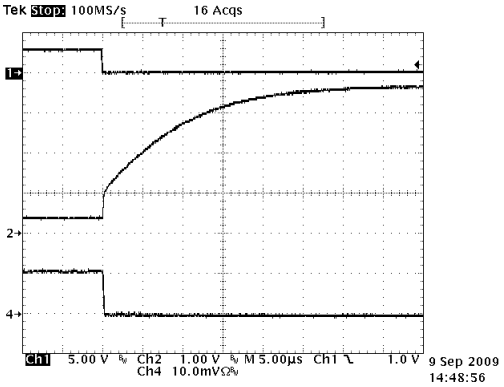

Fig. 18: LED Current Settling Time 200mA to Shutdown. CH1=RESET_N, CH2=LEDx, CH4=I_{LED}=0.2A/div

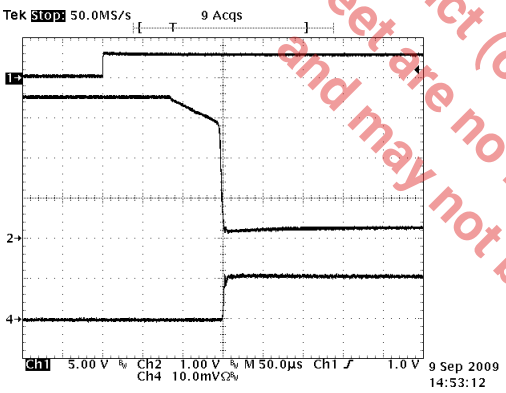

Fig. 19: LED Current Settling Time From Shutdown to 200mA. CH1=RESET_N, CH2=LEDx, CH4=I_{LED}=0.2A/div

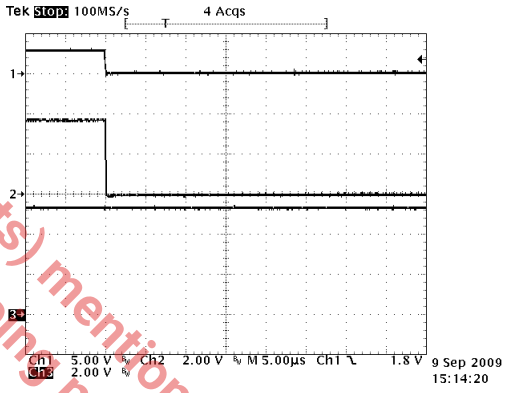

Fig. 20: Flash Mode Shutdown. CH1=RESET_N, CH2=RDY, CH3=V_{OUT}

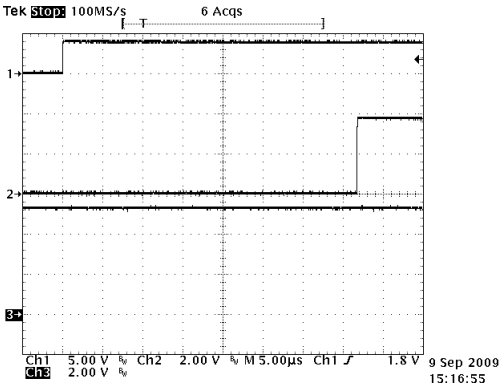

Fig. 21: Figure 21: Flash Mode Enable From Shutdown CH1=RESET_N, CH2=RDY, CH3=V_{OUT}

The product (or products) mentioned in this data sheet are no longer being manufactured and may not be ordered (OBS)

APPLICATION INFORMATION

I²C SERIAL INTERFACE

REGISTERS

The XRP6840 has five serially programmable data registers via the I²C interface. These registers can be reset to '0' through power on reset or setting RESET_N, pin 6, to '0'. The first register is for Device Address as shown in Figure 3; it is activated by '28' HEX (7-bit format). The second register, STATUS1, contains the control word for programming operating modes, shutdown control, charge pump modes and flash timeout. The third register, STATUS2, contains the flash voltage level, read back of the Flash Ready, and fault conditions UVLO and over temperature. The fourth register, LEDFLASH, controls individual LED channels and current level in Flash Mode. The fifth register, LEDTORCH, controls individual LED channels and current level in Torch Mode.

Register	B7	B6	B5	B4	B3	B2	B1	B0
Address	0	1	0	1	0	0	0	R/W
STATUS1	Flash Torch Mode	Flash Torch Mode	Shut Down Control	Gain	Gain	-	Flash Timeout	Flash Timeout
STATUS2	Flash V	Flash V	Flash V	Flash Ready	UVLO Fault	Temp Fault	0	0
LEDFLASH	LED1	LED2	LED3*	D2	D1	D0	-	-
LEDTORCH	LED1	LED2	LED3*	D3	D2	D1	D0	-

Table 1: XRP6840 I²C Registers Bit Map

* Not used for XRP6840B

STATUS1 Register

STATUS1 Register Bits B7, B6, B4 and B3

B7	B6	B4	B3	Operation Mode
0	1	0	0	High Efficiency Torch Mode
0	1	0	1	1X Torch Mode
0	1	1	0	1.5X Torch Mode
0	1	1	1	2X Torch Mode
1	0	0	0	Auto Gain Torch Mode
1	0	0	1	1X Torch Mode
1	0	1	0	1.5X Torch Mode
1	0	1	1	2X Torch Mode
1	1	0	0	Auto Gain Flash Mode
1	1	0	1	1X Flash Mode
1	1	1	0	1.5X Flash Mode
1	1	1	1	2X Flash Mode

Table 2: STATUS1 Register Operation Modes

STATUS1 Register Bit B5

This bit is used to save or reset the contents of STATUS1, STATUS2, LEDFLASH and LEDTORCH registers for the next I²C command when RESET_N, pin 6, is '1'. If B5 is '1' then all bits in these registers will be saved. Otherwise if B5 is '0' then all bits will be reset to '0'.

STATUS1 Register Bits B1 and B0

These two bits program the flash timeout duration as follows:

B1	B0	Flash Duration
0	0	0.11s
0	1	0.22s
1	0	0.53s
1	1	1.10s

Table 3: Charge Pump Mode Selection

STATUS2 Register

Flash Mode Voltage Programming

V_{OUT_LIMIT} in Flash Mode is regulated with 50mV of hysteresis and is programmed through bits B7, B6 and B5 of STATUS2 register as follows:

B7	B6	B5	Comment
0	0	0	4.55V
0	0	1	4.70V
0	1	0	4.85V
0	1	1	5.00V
1	0	0	5.15V
1	0	1	5.30V
1	1	0	5.45V
1	1	1	5.60V

Table 4: Flash Mode V_{OUT_LIMIT} Settings

Bit B4

RDY bit is available for I²C read-back. This bit is set to '1' when $V_{OUT} > V_{OUT_LIMIT}$, and set to '0' otherwise.

Fault mode read-back bits B3, B2

These bits are designed for 2 Fault Mode flags and are also available for I²C read-back. Bits 3 and 2 are set to '1' when UVLO and over temperature conditions are detected, as shown in Table 1.

LEDFLASH Register

LEDFLASH register, bits B7, B6 and B5 are used to activate the LED outputs channels as summarized in Table 1; they correspond to LED_1, LED_2 and LED_3. Bits B4, B3 and B2

The product (or products) mentioned in this data sheet are no longer being manufactured and may not be ordered (OPS).

represent the DAC codes D2, D1, D0. They are used to set the flash LED current levels in each channel. Table 5 provides the DAC codes and the corresponding nominal current levels for each channel:

D2-D0 Code	XRP6840A I_{OUT}/Ch. (mA)	D2-D0 Code	XRP6840B I_{OUT}/Ch. (mA)
0 0 0	0	0 0 0	0
0 0 1	400	0 0 1	597
0 1 0	586	0 1 0	875
0 1 1	770	0 1 1	1127
1 0 0	948	1 0 0	1400
1 0 1	1197	1 0 1	1671
1 1 0	1291	1 1 0	1910
1 1 1	1445	1 1 1	2150

Table 5: Nominal Flash Mode Output Current

LEDTORCH Register

LEDTORCH register bits B2 to B7, also summarized in Table 1; they correspond to LED1, LED2 and LED3. Bits B4, B3, B2, and B1 represent the DAC codes D3, D2, D1, D0. They are used to set the torch LED current levels in each channel. Table 6 provides the DAC codes and their corresponding nominal current levels for each channel. Remember that the total current that can be supported in torch mode is 600mA divided by the gain of the charge pump. If 2 channels are set to 440mA (a total of 880mA), even with a gain of 1X, the input current limit will clamp the total current to approximately 600mA.

D3-D0 Code	XRP6840A I_{OUT}/Ch. (mA)	D3-D0 Code	XRP6840B I_{OUT}/Ch. (mA)
0 0 0 0	0	0 0 0 0	0
0 0 0 1	23	0 0 0 1	34
0 0 1 0	46	0 0 1 0	66
0 0 1 1	66	0 0 1 1	97
0 1 0 0	86	0 1 0 0	127
0 1 0 1	105	0 1 0 1	155
0 1 1 0	125	0 1 1 0	185
0 1 1 1	145	0 1 1 1	215
1 0 0 0	165	1 0 0 0	245
1 0 0 1	185	1 0 0 1	275
1 0 1 0	205	1 0 1 0	305
1 0 1 1	225	1 0 1 1	330
1 1 0 0	245	1 1 0 0	360
1 1 0 1	260	1 1 0 1	385
1 1 1 0	280	1 1 1 0	415
1 1 1 1	300	1 1 1 1	440

Table 6: Torch Mode Output Current

Addressing and Writing Data

To write data to the XRP6840 one of the following two sequences is required:

Easy shutdown/startup sequence

[Slave Address with write bit][Data for Status]

Full shutdown/startup sequence

[Slave Address with write bit][Data for Status] [Data for LEDFLASH][Data for LEDTORCH]

Slave address is '28' Hex.

Addressing and Reading Data

To read data from the XRP6840 the following sequence is required:

[Slave Address with read bit][Data for Status] [Data for LEDFLASH][Data for LEDTORCH]

The product (or products) mentioned in this data sheet are no longer being manufactured and may not be ordered (OBS)

THEORY OF OPERATION

When V_{IN} reaches 2.7V during initial power up, a power on reset signal will be issued to reset all the registers and the internal logic, and the system will be ready for operation.

To be in operation the XRP6840 must be enabled through RESET_N, pin 6. The LEDs can be activated through LEDFLASH or LEDTORCH registers.

CHARGE PUMP MODES 1X, 1.5X AND 2X

The XRP6840 charge pump can operate in 1x, 1.5x and 2x modes to ensure desired current regulation. Once the output reaches V_{OUT_LIMIT}, the charge pump will turn off.

In 1x mode, the input is simply connected to the output through an internal 0.5Ω MOSFET. An internal in-rush current limit will keep the charging current controlled to a maximum of 600mA.

In 1.5x mode, during the first clock phase the 2 flying capacitors, C_1 and C_2, are series connected between V_{IN} and ground, charging each capacitor to ½ V_{IN}. In the second clock phase, the flying capacitors are parallel connected and placed in series with V_{IN}, producing 1.5xV_{IN} to be discharged across the output capacitor. Note the maximum total output current is now 600mA÷1.5 or 400mA.

In 2x mode, during the first clock phase, one flying capacitors is charged to V_{IN}. In the second clock phase, this capacitor is placed in series with V_{IN}, producing 2xV_{IN} to be discharged across the output capacitor. Note the maximum total output current is now 600mA÷2 or 300mA.

CHARGE PUMP CONTROLLER

The charge pump controller regulates the output by turning the charge pump off once the output reaches V_{OUT_LIMIT}. For both Torch and Flash Modes, there is 50mV of output voltage hysteresis before the charge pump is re-enabled. However, in High Efficiency Torch mode, it will only turn on again when V_{LEDX} is below the drop out voltage of approximately 0.36V. Once the charge pump turns on again, it will then monitor both V_{OUT} and V_{LEDX} voltages. This operation will be explained further in the High Efficiency Torch Mode section.

The XRP6840 can operate in either "Auto Gain Mode" or "Programmable Gain Mode". However, either mode will be overridden during start-up based on the following internal control algorithm:

1. If V_{OUT} > V_{OUT_LIMIT} then the charge pump is OFF.
2. If V_{OUT} < V_{IN} – 1V then the charge pump can only operate in 1x mode.
3. If V_{IN} – 1V < V_{OUT} < V_{IN} then the charge pump is allowed to operate in either 1x or 1.5x mode but not in 2x mode.
4. If V_{OUT} > V_{IN} then the charge pump can operate either in 1.5x or 2x mode but not in 1x mode (there is no reverse current limit on the 0.5Ω bypass MOSFET).
5. If V_{OUT} > V_{OUT_LIMIT}, and all LEDs are deactivated then XRP6840 will operate in standby mode with 30µA supply current.

V_{OUT_LIMIT} is 4.5V for Torch Mode and High Efficiency Torch Mode; for Flash mode V_{OUT_LIMIT} is shown in Table 4.

Standby mode is set by either LEDFLASH or LEDTORCH registers [B7 B6 B5] to [0 0 0]. This will deactivate all the LED channels.

AUTO GAIN START-UP

The Auto Gain Start mode is the fastest way to charge the output toward VOUT_LIMIT. It is initiated with the following conditions; as shown in Table 7 (a sub-set of Table 2), in STATUS1 Register.

B7	B6	B4	B3	Operation Mode
0	1	0	0	High Efficiency Torch Mode
1	0	0	0	Auto Gain Start Torch Mode
1	1	0	0	Auto Gain Start Flash Mode

Table 7: Auto Start Mode from STATUS1 Register

When in Auto Gain Start Mode, the XRP6840 will charge up V_{OUT} to V_{OUT_LIMIT} with maximum available current within the constraints defined above for start-up.

In this mode the XRP6840 will initialize the system as follows:

1. Turn off all the LEDs that were programmed through LEDTORCH or LEDFLASH registers.

The Product(s) mentioned in this data sheet are no longer being manufactured and may not be ordered (OBS)

2. Determine if VOUT_LIMIT is reached. If this condition is met anytime, the charge pump will turn off, release the control of the LEDTORCH or LEDFLASH registers, and will be ready for turning on the LEDs.

After system initialization, the XRP6840 will automatically switch between 1x, 1.5x, or 2x mode modes to try and keep input current to a maximum without exceeding 600mA. Auto Start Mode ends when V_{OUT} reaches V_{OUT_LIMIT}.

The Auto Start Mode begins in 1x mode or 1.5x mode if V_{OUT} > V_{IN}. When the input current drops to approximately 400mA the XRP6840 is able to switch from 1x to 1.5x mode without exceeding 600mA. The switch from 1.5x mode to 2x mode occurs if V_{OUT} has not reached V_{OUT_LIMIT} and when the input current is below 300mA. After switching to 2x mode, the charge pump continues to operate until V_{OUT_LIMIT} is reached.

If V_{OUT_LIMIT} could not be reached, then the XRP6840 will continuously run the charge pump in 2x mode. At this point, it is recommended to shut down through I²C, RESET_N to '0' or power down.

There are probably 2 main causes for the XRP6840 to remain in 2x mode: V_{OUT} overloaded or V_{IN} too low. If the output were shorted, the current in 1x mode would never drop below 600mA and the XRP6840 would never move to the higher gains. Removing the short or overload will allow the XRP6840 to recover back to normal operation. If V_{IN} is too low then it is advisable to power down the system and change the battery.

Programmable Start Mode

Programmable start mode allows the flexibility to select the maximum gain. Start-up gains are based strictly on input and output voltage differences. The 600mA input current limit is still imposed, but typically is not triggered. This is why Auto Start Mode is recommended because it charges the output capacitor the fastest.

Even though the maximum gain is programmed, the 5 stage internal control algorithm on the previous page will still override the programmed gain to ensure optimum operation and reverse current protection in 1x mode. Reverse current is possible in 1.5x or 2x modes and that leads to interesting applications possibilities.

Reversing the Power Flow

By forcing the charge pump into 1.5x mode once the output voltage is charged in Flash Mode, it is possible to reverse the current back to the input if the input voltage is <3.6V. This gives one the possibility of using the XRP6840 Flash system to provide power back to the input when other parts of the system require unusually high loads. A couple of examples are; a high power burst transmit, or HDD spin up.

In Flash Mode, charge the output capacitor to 5.45V (STATUS2 Register B7-B5 = 110) using Auto Start Mode. When power is required back at the input, force to 1.5x mode (STATUS1 Register B4-B3 = 10) and change V_{OUT_LIMIT} to 5.60V (STATUS2 Register B7-B5 = 111). This will have the effect of instantly turning on the charge pump in 1.5x mode. If the input voltage is 3V, then approximately 300mA will flow from the output super capacitor to the input for 650ms. The current will drop as the super capacitor discharges, but as much as 150mA is available after 1.5seconds.

A more complete application note will be forthcoming on this topic.

High Efficiency Torch Mode

High Efficiency Torch Mode is a special XRP6840 feature designed to achieve the highest torch mode power efficiency. This mode is activated only when STATUS1 [B7 B6 B4 B3] are [0 1 0 0]. LEDTORCH [B7 B6 B5] can be set according to the number of desired LED channels.

First, the charge pump will charge V_{OUT} to V_{OUT_LIMIT} then turn off. Then when the LEDs are enabled, the control loop will adjust V_{OUT} to the minimum value required to maintain current regulation. It does this by monitoring and regulating the V_{LEDX} voltage with respect to an adaptive drop out voltage, V_{DO}.

The adaptive V_{DO} algorithm will allow V_{LEDX} to drop down to 220mV for 1x mode and 180mV for both 1.5x and 2x modes. This will ensure the XRP6840 stays in the lowest charge pump

The product (or product) mentioned in this data sheet are no longer being manufactured and may not be ordered (OBS)

mode to maintain good current regulation. As Figure 5 shows, very high efficiency can be obtained if the system can operate at the lowest available charge pump gain at very low V_{IN} levels. Due to the XRP6840's low drop out voltage design, good current regulation can still be achieved at extremely low V_{LED} voltage levels.

When V_{LEDX} drops below V_{DO}, and V_{OUT} is also below V_{OUT_LIMIT}, the XRP6840 charge pump will turn on to charge the V_{OUT} and V_{LEDX}. If V_{LEDX} is still below V_{DO} after 64 clock cycles or 27µs (at 2.4MHz), the XRP6840 will jump to the next higher gain. If at any time, V_{OUT_LIMIT} is reached, then charge pump will turn off.

Fault Protection

Although most of these modes of operation have already been previously described, they are repeated here to emphasize the robustness of the XRP6840.

The output voltage is directly monitored and controlled through the V_{OUT} pin. Should an open occur on the V_{OUT} pin, the output is disconnected from the input and no damaging voltages will be applied to the output super capacitor due to an open loop condition.

The XRP6840 also has a built-in over current protection because when the output is shorted, the XRP6840 will force the part to be in 1x mode and its output current is always limited to 600mA regardless of whether or not the part is in Auto or Programmed Start Modes.

The XRP6840 also has thermal protection. If the junction temperature rises above 150°C, the part is disabled. Once the temperature drops below 140°C the part is re-enabled.

Open and Short LED Protection

An open LED has no real effect on the operation of the XRP6840.

If an LED fails short, that channel will be disabled. The short condition is asserted when V_{OUT} to V_{LEDX} is less than 200mV. Only the driver of the shorted LED will be turned off and no current will flow. However, the other channels will continue to operate as intended, independently of the shorted channel.

Component Selection

The XRP6840 charge pump circuit requires the following capacitors:

1. Input Cap: 22µF
2. Output Cap: 10µF
3. Charge Pump Flying caps: 2x0.47µF
4. Supercapacitor: 0.6F (0.3F to 0.9F).

Input capacitances higher than 10µF will help reduce input voltage ripple and in-rush current. Refer to Figures 9 and 10 for comparison.

The input and output capacitors should be located as close to the V_{IN} and V_{OUT} pins as possible to obtain best bypassing. Their returns paths should be connected directly to the P_{GND} pin or to the thermal pad ground located under the XRP6840. The flying capacitors should be located as close to the C_{1P}, C_{1N} and C_{2P}, C_{2N} pins as possible.

All the capacitors should be surface mount ceramic types for low ESR and for low lead inductances. These capacitors can also improve bypassing. X5R or X7R temperature grades are recommended for this application.

The supercapacitor selection depends on LED current, flash duration, and LED forward voltage. The minimum super capacitor is determined as follows:

$$C = \frac{I_{OUT} \times T_{FLASH}}{V_{OUT_LIMIT} - V_F - V_{LED} - I_{OUT} \times R_{CAP_ESR}}$$

I_{OUT} is the target flash current, T_{FLASH} is the flash duration, V_{OUT_LIMIT} is the initial Super Capacitor voltage programmed by STATUS2 register bits [B7 B6 B5], V_F is the LED forward voltage and V_{LED} is the maximum LED pin voltage before dropout (360mV at 125°C).

For example, for a 4.3A flash with 110ms duration, LED V_F of 3.5V and V_{OUT_LIMIT} voltage of 5.3V, the minimum capacitance is:

$$C = \frac{4.8A \times 0.11s}{5.3V - 3.5V - 0.36V - 4.8A \times 0.05\Omega} \cong 0.44F$$

The Product(s) mentioned in this data sheet are no longer being manufactured and may not be ordered (OBS)

To achieve 4.3A flash pulses, we recommend using 0.55F Super Capacitor from TDK EDLC2720-501-2F-50 with voltage rating of 5.5V and 50mΩ of ESR, or the 0.6F HS206F Super Capacitor from CAP-XX with a voltage rating of 5.5V and 80mΩ of ESR.

TYPICAL APPLICATION SCHEMATICS

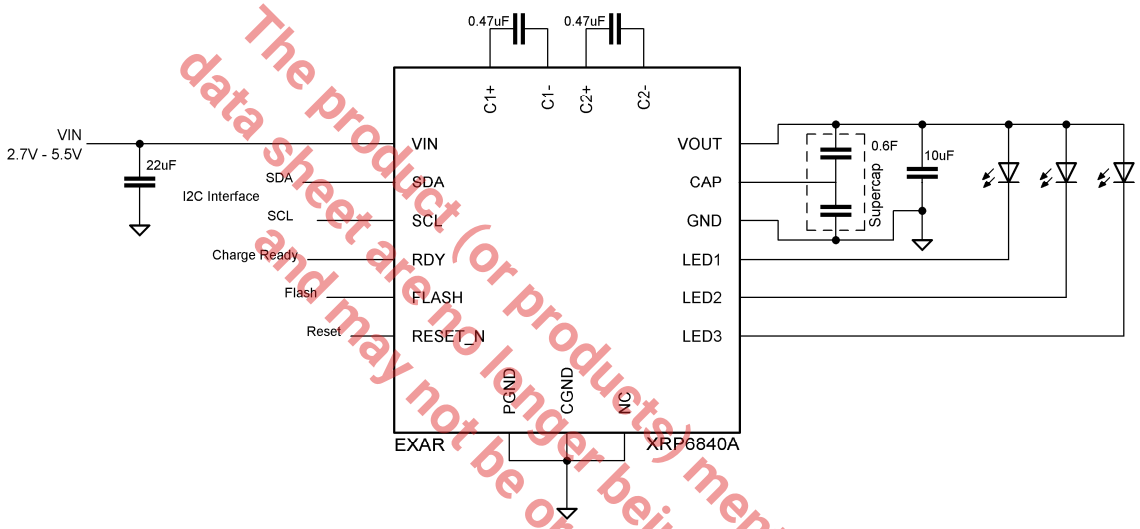

Fig. 22: XRP6840A - 3 Channel - 4.3A Total LED Flash Current

The product (or products) mentioned in this data sheet are no longer being manufactured and may not be ordered (OBS)

PACKAGE SPECIFICATION

20-PIN TQFN

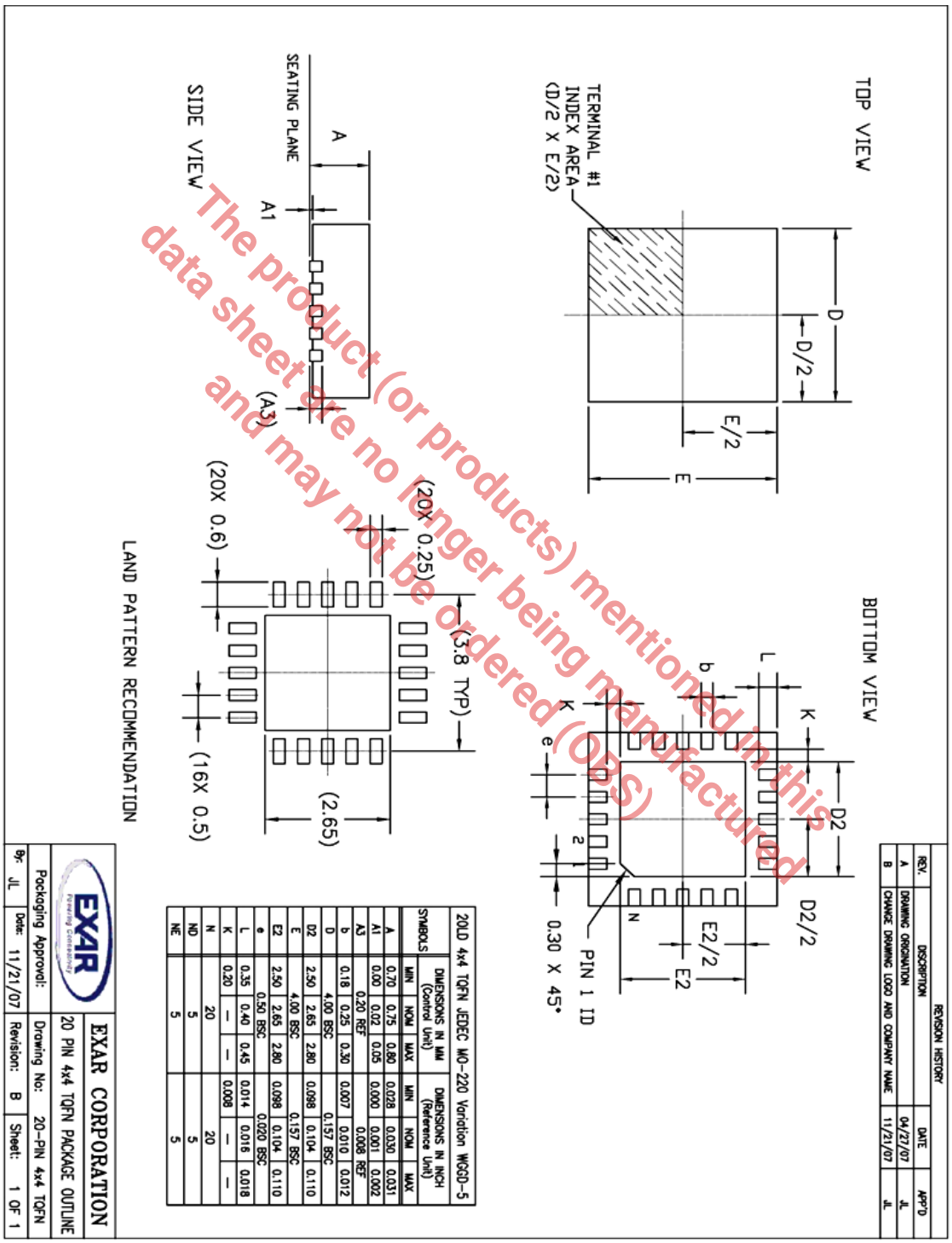

SYMBOLS	DIMENSIONS IN MM (Control Unit)			DIMENSIONS IN INCH (Reference Unit)		
	MIN	NOM	MAX	MIN	NOM	MAX
A	0.70	0.75	0.80	0.028	0.030	0.031
A1	0.00	0.02	0.05	0.000	0.001	0.002
A3		0.20 REF			0.008 REF	
b	0.18	0.25	0.30	0.007	0.010	0.012
D		4.00 BSC			0.157 BSC	
D2	2.50	2.65	2.80	0.098	0.104	0.110
E		4.00 BSC			0.157 BSC	
E2	2.50	2.65	2.80	0.098	0.104	0.110
e		0.50 BSC			0.020 BSC	
L	0.35	0.40	0.45	0.014	0.016	0.018
K	0.20	—	—	0.008	—	—
N		20			20	
ND		5			5	
NE		5			5	

REV.	DESCRIPTION	DATE	APP'D
A	DRAWING ORIGINATION	04/27/07	JL
B	CHANGE DRAWING LOGO AND COMPANY NAME	11/21/07	JL

Packaging Approval:	Drawing No: 20-PIN 4x4 TQFN		
Date: 11/21/07	Revision: B	Sheet: 1 OF 1	
By: JL			

The product (or products) mentioned in this data sheet are no longer being manufactured and may not be ordered (OBS)

REVISION HISTORY

Revision	Date	Description
1.0.0	12/05/2009	Initial Release of Data Sheet

The product (or products) mentioned in this data sheet are no longer being manufactured and may not be ordered (OBS)

FOR FURTHER ASSISTANCE

Email: customersupport@exar.com

Exar Technical Documentation: http://www.exar.com/TechDoc/default.aspx?

EXAR CORPORATION

HEADQUARTERS AND SALES OFFICES

48720 Kato Road

Fremont, CA 94538 – USA

Tel.: +1 (510) 668-7000

Fax: +1 (510) 668-7030

www.exar.com

NOTICE

EXAR Corporation reserves the right to make changes to the products contained in this publication in order to improve design, performance or reliability. EXAR Corporation assumes no responsibility for the use of any circuits described herein, conveys no license under any patent or other right, and makes no representation that the circuits are free of patent infringement. Charts and schedules contained here in are only for illustration purposes and may vary depending upon a user's specific application. While the information in this publication has been carefully checked; no responsibility, however, is assumed for inaccuracies.

EXAR Corporation does not recommend the use of any of its products in life support applications where the failure or malfunction of the product can reasonably be expected to cause failure of the life support system or to significantly affect its safety or effectiveness. Products are not authorized for use in such applications unless EXAR Corporation receives, in writing, assurances to its satisfaction that: (a) the risk of injury or damage has been minimized; (b) the user assumes all such risks; (c) potential liability of EXAR Corporation is adequately protected under the circumstances.

Reproduction, in part or whole, without the prior written consent of EXAR Corporation is prohibited.