SP206 / SP207 / SP208 / SP211

+5V RS-232 Serial Transceivers

FEATURES

- 0.1µF External Charge Pump Capacitors
- 120kbps Data Rate
- Standard SOIC and SSOP Packaging
- Multiple Drivers and Receivers
- Single 5V Supply Operation
- 1.0µA Shutdown Mode
- Tri-State Receiver Outputs
- Meets all RS-232F and V.28 Specifications
- Improved Driver Output Capacity for Mouse Applications
- +/-10kV ESD Protection*

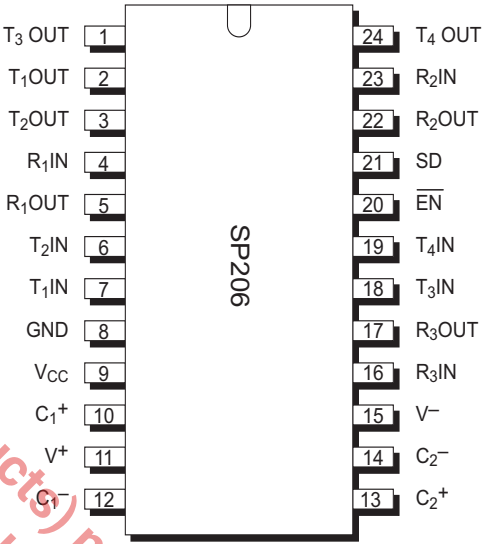

The product (or products) mentioned in this datasheet are no longer being manufactured and may not be ordered (OBS)

SP208 (24 pin SSOP version) is available; SP206, SP207, SP211 and 24 pin WSOIC version of SP208 are obsolete.

Now Available in Lead Free Packaging

Note: See page 4 for other pinouts

DESCRIPTION

The SP206, SP207, SP208 and SP211 are multi-channel RS-232 line transceivers in a variety of configurations to fit most communication needs. All models in this series feature low-power CMOS construction and Exar Patented (5,306,954) on-board charge pump circuitry to generate the +/-10V RS-232 voltage levels, using 0.1µF charge pump capacitors to save board space and reduce circuit cost. The SP206 and SP211 models feature a low-power shutdown mode which reduces power supply drain to 1 µA.

Model	Number of RS-232		No. of RX active in Shutdown	No. of External 0.1µF Capacitors	Shutdown	WakeUp	TTL Tri-State
	Drivers	Receivers					
SP206	4	3	0	4	Yes	No	Yes
SP207	5	3	0	4	No	No	No
SP208	4	4	0	4	No	No	No
SP211	4	5	0	4	Yes	No	Yes

Table 1. Mode Selection Table

* All Driver Outputs and Receiver Inputs characterized per MIL-STD-883C Method 3015.7

ABSOLUTE MAXIMUM RATINGS

These are stress ratings only and functional operation of the device at these ratings or any other above those indicated in the operation sections of the specifications below are not implied. Exposure to absolute maximum ratings conditions for extended periods of time may affect reliability.

Supply Voltage (V_{CC}).....+ 6V
V+..... (Vcc-0.3V) to +13.2V
V- .....-13.2V
Input Voltages
Tin.....-0.3V to (Vcc + 0.3V)
Rin.....+/-20V
Output Voltages
Tout.....(V+, +0.3V) to (V-, -0.3V)
Rout.....-0.3V to (Vcc + 0.3V)
Short Circuit duration on Tout.....Continuous

Package Power Dissipation:
24-pin SSOP
(derate 11.2mW/°C above +70°C).....900mW
24-pin WSOIC
(derate 12.5mW/°C above +70°C).....1000mW
28-pin SSOP
(derate 11.2mW/°C above +70°C).....900mW
28-pin WSOIC
(derate 12.7mW/°C above +70°C).....1000mW

Storage Temperature.....-65°C to +150°C
Lead Temperature (soldering, 10s)..... +300°C

The product (or products) mentioned in this data sheet are no longer being manufactured and may not be ordered (OBS)

ELECTRICAL CHARACTERISTICS

Vcc = 5V, C1 to C4 = 0.1µF, T_{MIN} to T_{MAX}, unless otherwise noted.

PARAMETER	TEST CONDITIONS	MIN	TYP	MAx	UNIT
TTI INPUT					
Logic Threshold LOW, V_{IL}	TIN, $\overline{EN}$, SD			0.8	Volts
Logic Threshold HIGH, V_{IH}	TIN, $\overline{EN}$, SD	2.0			Volts
Logic Pull-Up Current	TIN = 0V		15	200	µA
Maximum Data Rate	C_L = 2500pF, R_L = 3kΩ	120			kbps
TTI OUTPUT					
Output Voltage LOW, V_{OL}	I_{OUT} = 3.2mA: V_{CC} = +5V			0.4	Volts
Output Voltage HIGH, V_{OH}	I_{OUT} = -1.0mA	3.5			Volts
Leakage Current	$\overline{EN}$ = V_{CC}, 0V ≤ V_{OUT} ≤ Vcc T_A=25°C		0.05	+/-10	µA
RS-232 OUTPUT					
Output Voltage Swing	All Transmitter outputs loaded with 3k ohms to GND	+/-5.0	+/-7		Volts
Output Resistance	Vcc = 0V, Vout = +/-2V	300			Ohms
Output Short Circuit Current	Infinite Duration		+/-25		mA
RS-232 INPUT					
Voltage Range		-15		+15	Volts
Voltage Threshold LOW	Vcc = 5V, T_A=25°C	0.8	1.2		Volts
Voltage Threshold HIGH	Vcc = 5V, T_A=25°C		1.7	2.4	Volts
Hysteresis	Vcc = 5V	0.2	0.5	1.0	Volts
Resistance	T_A=25°C, -15V ≤ V_{IN} ≤ +15V	3	5	7	kΩ

ELECTRICAL CHARACTERISTICS

Vcc = 5.0V, C1 to C4 = 0.1µF, T_{min} to T_{max}, unless otherwise noted.

Parameter	TEST CONDITIONS	MIN	TYP	MAX	Unit
DYNAMIC CHARACTERISTICS					
Receiver Propagation Delay	RS-232 to TTL,		1.5		µs
Instantaneous Slew Rate	C_L = 50pF, R_L = 3-7kΩ, T_A=25°C			30	V/ µs
Transition Region Slew Rate	C_L = 2500pF, R_L = 3kΩ; Measured from +3V to -3V or -3V to +3V		5		V/ µs
Output Enable Time			400		ns
Output Disable Time			250		ns
POWER REQUIREMENTS					
Vcc (SP207)		4.75	5.00	5.25	Volts
Vcc (SP206, SP208 and SP211)		4.50	5.00	5.5	Volts
Vcc Power Supply Current	No Load, Vcc = +/-10%, T_A=25°C		4	10	mA
Vcc Power Supply Current, Loaded	All Transmitters RL = 3kΩ, T_A=25°C		20		mA
Shutdown Supply Current	T_A=25°C		1	10	µA
ENVIRONMENTAL AND MECHANICAL					
Operating Temperature, Commercial, _C		0		+70	°C
Operating Temperature, Extended, _E		-40		+85	°C
Storage Temperature		-65		+150	°C
Package _A	Shrink (SSOP) small outline				
Package _T	Wide (SOIC) small outline				

The product (or products) mentioned in this data sheet are no longer being manufactured and may not be ordered (OBS)

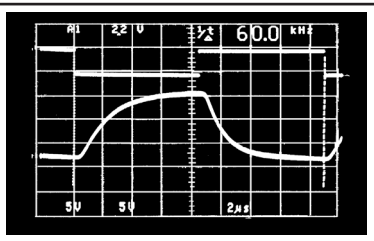

Transmitter Output
R_L = 3kΩ, C_L = 5,000pF

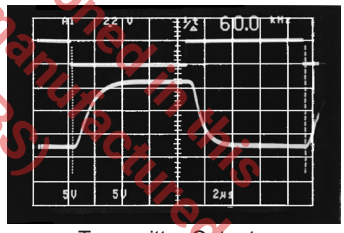

Transmitter Output
R_L = 3kΩ, C_L = 2,500pF

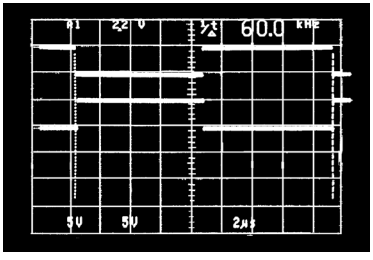

Receiver Output

PACKAGE PINOUTS

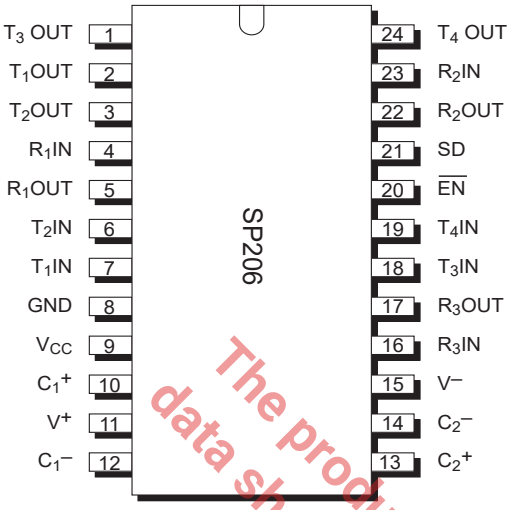

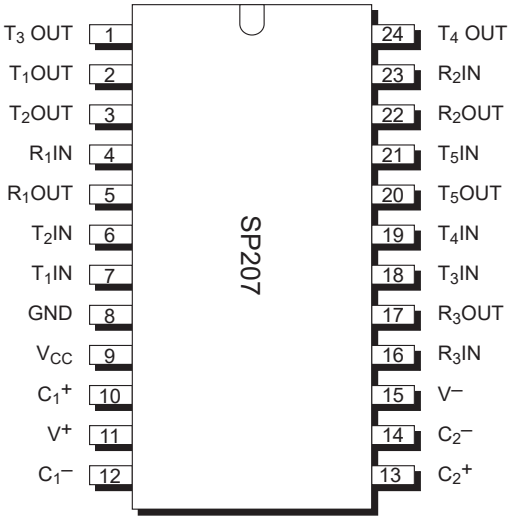

The product (or products) mentioned in this data sheet are no longer being manufactured and may not be ordered (OBS)

SP208 is available; SP206, SP207 and SP211 are obsolete.

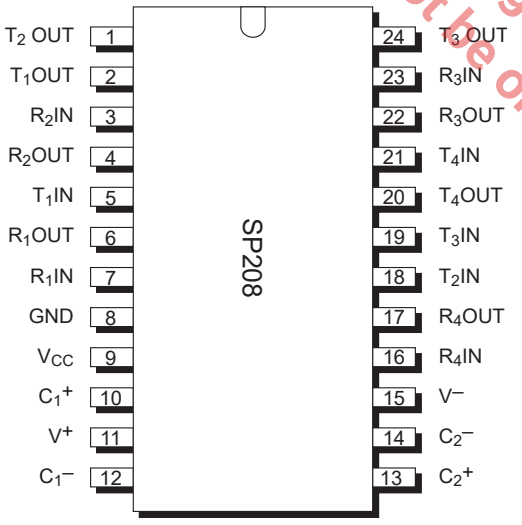

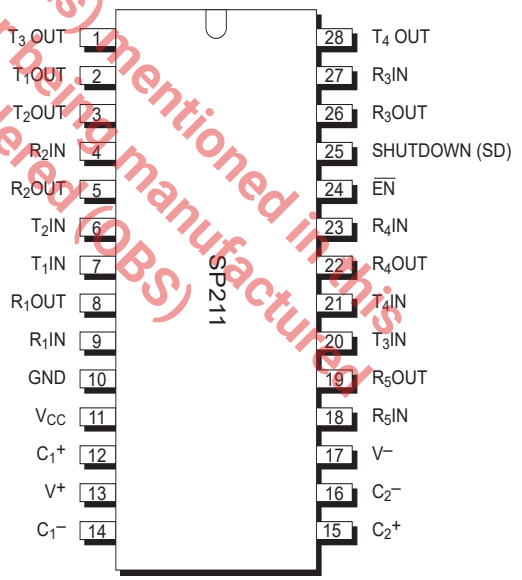

FEATURES

The SP206/207/208/211 multi-channel RS-232 line transceivers provide a variety of configurations to fit most communication needs, especially those applications where +/-12V is not available. All models in this series feature low-power CMOS construction and Exar's proprietary on-board charge pump circuitry to generate the +/-10V RS-232 voltage levels. The ability to use 0.1µF charge pump capacitors saves board space and reduces circuit cost. Different models within the series provide different driver/receiver combinations to match any application requirement.

The SP206 and SP211 models feature a low-power shutdown mode that reduces power supply drain to 1µA.

The models in this series are available in 24-pin and 28-pin SO (wide) and SSOP (shrink) small outline packages. Devices can be specified for commercial (0ºC to +70ºC) or industrial/extended (-40ºC to +85ºC) operating temperatures.

THEORY OF OPERATION

CHARGE PUMP

The charge pump is an Exar patented design and uses a unique approach compared to older, less-efficient designs. The charge pump still requires four external capacitors, but uses a four phase voltage shifting technique to attain symmetrical +/-10V power supplies. Figure 1a shows the waveform found on the positive side of capacitor C2 and Figure 3b shows the negative side of capacitor C2. There is a free-running oscillator that controls the four phases of the voltage shifting. A description of each phase follows:

PHASE 1

Vss charge storage - During this phase of the clock cycle, the positive side of capacitors C1 and C2 are initially charged to +5V. C1+ is then switched to ground and the charge in C1- is transferred to C2-. Since C2+ is connected to +5V, the voltage potential across capacitor C2 is now 10V.

PHASE 2

Vss transfer: Phase two of the clock connects the negative terminal of C2 to the Vss storage capacitor and the positive terminal of C2 to ground, and transfers the generated -10V to C3. Simultaneously, the positive side of capacitor C1 is switched to +5V and the negative side is connected to ground.

PHASE 3

Vdd charge storage: The third phase of the clock is identical to the first phase. The charge transferred in C1 produces -5V in the negative terminal of C1, which is applied to the negative side of C2. Since C2+ is at +5V, the voltage potential across C2 is 10V.

PHASE 4

Vdd transfer: The fourth phase of the clock connects the negative terminal of C2 to ground, and transfers the generated 10V across C2 to C4, the Vdd storage capacitor. Again, simultaneously with this, the positive side of capacitor C1 is switched to +5V and the negative side is connected to ground, and the cycle begins again.

Since both V+ and V- are separately generated from Vcc, in a no-load condition V+ and V- will be symmetrical. Older charge pump approaches that generate V- from V+ will show a decrease in magnitude of V- compared to V+ due to the inherent inefficiencies in the design.

The clock rate for the charge pump typically operates at greater than 15kHz allowing the pump to run efficiently with small 0.1uF capacitors with a 16V breakdown voltage rating.

The SP206/207/208/211 devices are made up of three basic circuit blocks - 1) transmitter/driver, 2) receiver and 3) charge pump. Each model within the series incorporates variations of these circuit to achieve the desired configuration and performance.

The product (or products) mentioned in this datasheet are no longer being manufactured and may not be ordered (Obs)

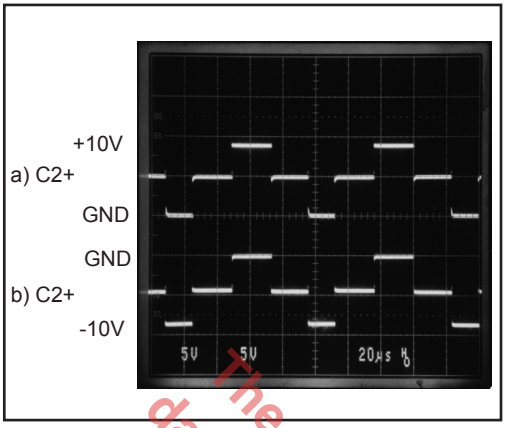

Figure 1. Charge Pump Waveforms

TRANSMITTER/DRIVER

The drivers are inverting transmitters, which accept either TTL or CMOS inputs and output the RS-232 output signals with an inverted sense relative to the input logic levels. Typically, the RS-232 output voltage swing is +/-9V with no load, and +/-5V minimum with full load. The transmitter outputs are protected against infinite short-circuits to ground without degradation in reliability. The drivers of the SP206 and SP211 can be tri-stated by using the SHUTDOWN function.

In the "power off" state, the output impedance will remain greater than 300 Ohms, again satisfying the RS-232 specifications. Should the input of the driver be left open, an internal 400kOhm pull-up resistor to Vcc forces the input high, thus committing the output to a low state. The slew rate of the transmitter output is internally limited to a maximum of 30V/µs in order to meet he EIA standards (EIA RS-232D 2,1,7, Paragraph 5). The transition of the loaded output from high to low also meets the monotonicity requirements of the standard.

RECEIVERS

The receivers convert RS-232 input signals to inverted TTL signals. Since the input is usually from a transmission line where long cable length and system interference can degrade the signal, the inputs have a typical hysteresis margin of 500mV. This ensures that the receiver is virtually immune to noisy transmission lines. Should an input be left unconnected, an internal 5kohm pull-down resistor to ground will commit the output of the receiver to a HIGH state.

SHUTDOWN MODE

The SP206 and SP211 feature a control input (SD) which will disable the device and reduce the power supply current to less than 10µA, making the parts ideal for battery-powered systems. In the "shutdown" mode the receivers and transmitters will both be tri-stated. The V+ output of the charge pump will discharge to Vcc and the V- output will discharge to ground.

ENABLE ($\overline{EN}$)

The SP206 and SP211 feature an enable input which allows the receiver outputs to be either tri-stated or enabled. This can be especially useful when the receiver is tied directly to a microprocessor data bus. The enable pin is active high.

The product(s) mentioned in this datasheet are no longer being manufactured and may not be ordered (OBS)

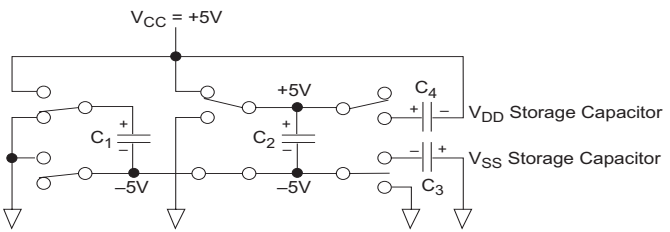

Figure 2, Charge pump - Phase 1

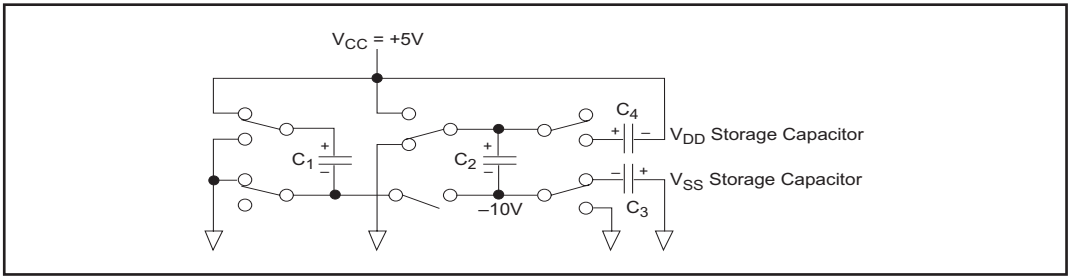

Figure 3, Charge pump - Phase 2

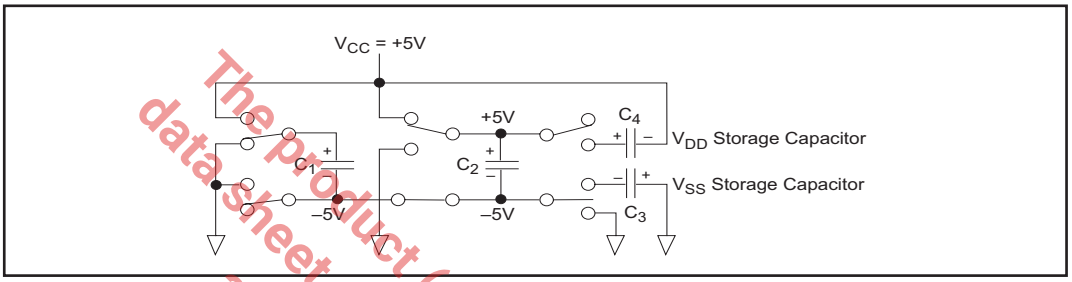

Figure 4, Charge pump - Phase 3

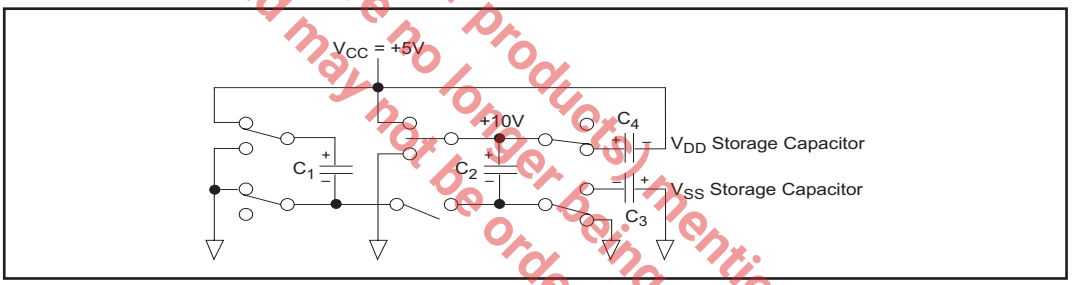

Figure 5, Charge pump - Phase 4

The product (or products) mentioned in this data sheet are no longer being manufactured and may not be ordered (Obs).

EIA STANDARDS

The Electronic Industry Association (EIA) developed several standards of data transmission which are revised and updated in order to meet the requirements of the industry. In data processing, there are two basic means of communicating between systems and components. The RS-232 standard was first introduced in 1962 and, since that time, has become an industry standard.

The RS-232 is a relatively slow data exchange protocol, with a maximum baud rate of only 20kbaud, which can be transmitted over a maximum copper wire cable length of 50 feet. The SP206 through SP211 series of data communications interface products have been designed to meet both the EIA protocol standards , and the needs of the industry.

+/-10kV ESD PROTECTION

The SP206/207/208/211 are equipped with Exar proprietary ESD protection circuitry on all RS-232 inputs and outputs. This series has been characterized using MIL-STD-883C Method 3015.7 Human Body Model. Each device in the family can withstand up to +/-10kV of static discharge on all RS-232 inputs and outputs. All other pins of each device will maintain ≥ +/-2kV of ESD protection.

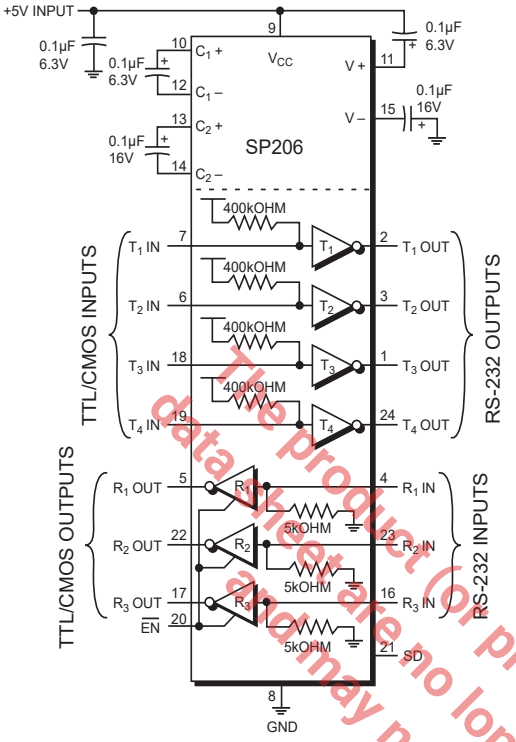

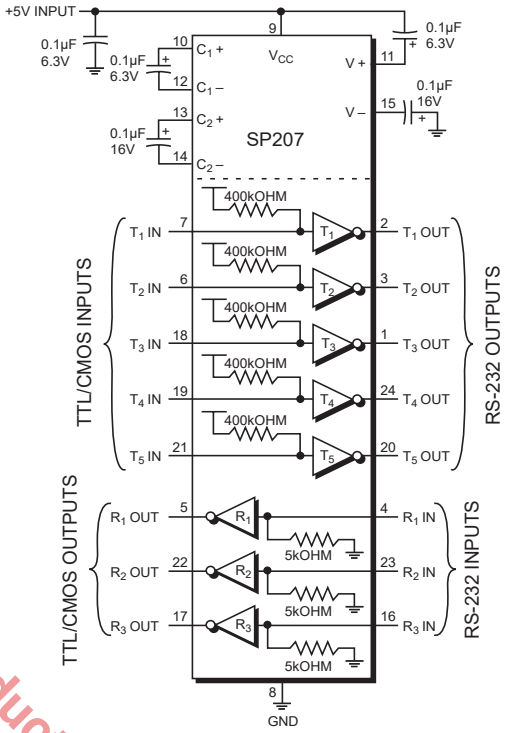

The product (or products) mentioned in this data sheet are no longer being manufactured and may not be ordered (OBS)

SP208 is available; SP206, SP207 and SP211 are obsolete.

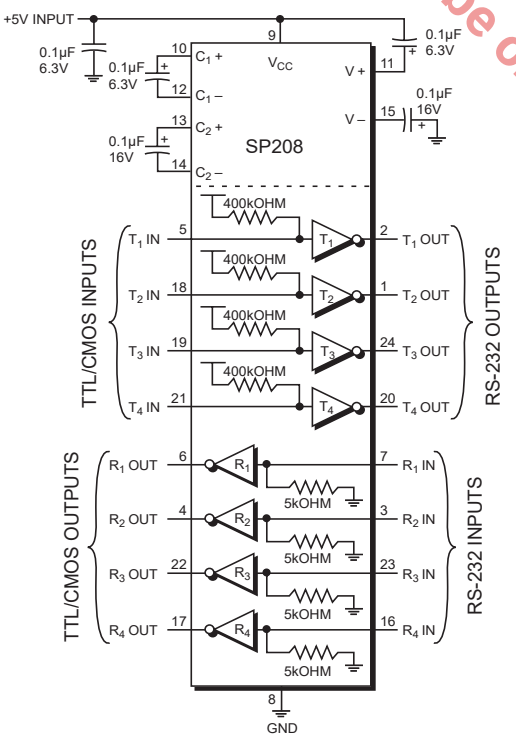

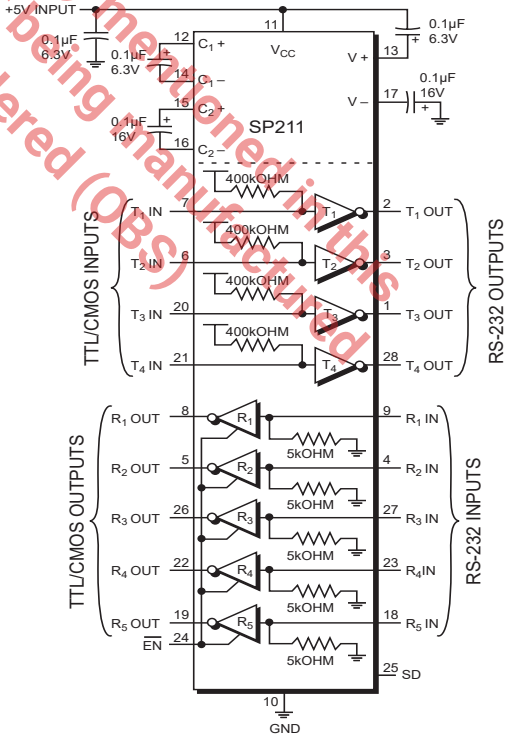

REVISION HISTORY			
REV.	DISCRIPTION	DATE	APP'D
A	DRAWING ORIGINATION	04/24/06	JL
B	CHANGE DRAWING LOGO AND COMPNAY NAME	11/28/07	JL

Top View

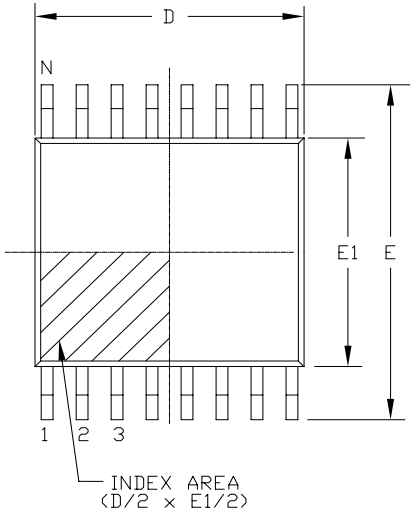

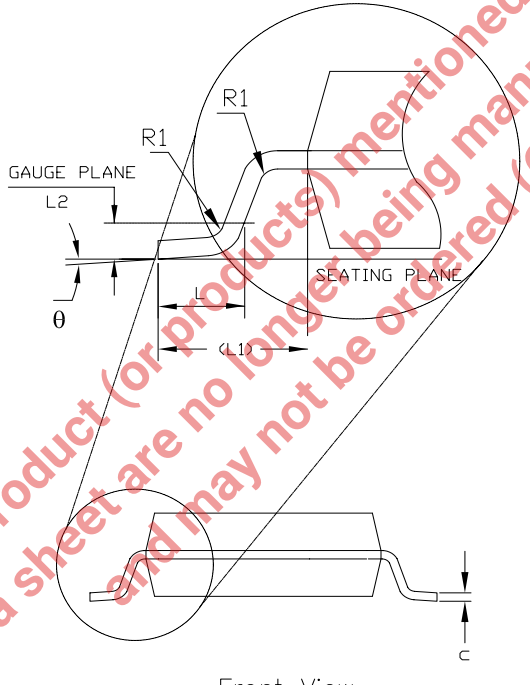

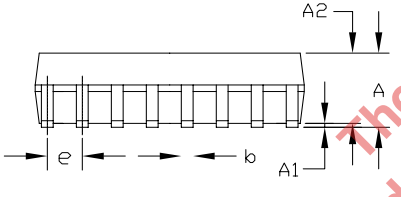

Side View

Front View

24 Pin SSOP JEDEC MO-150 Variation AG						
SYMBOLS	DIMENSIONS IN MM (Control Unit)			DIMENSIONS IN INCH (Reference Unit)		
	MIN	NOM	MAX	MIN	NOM	MAX
A	—	—	2.00	—	—	0.079
A1	0.05	—	—	0.002	—	—
A2	1.65	1.75	1.85	0.065	0.069	0.073
b	0.22	—	0.38	0.009	—	0.015
c	0.09	—	0.25	0.004	—	0.010
E	7.40	7.80	8.20	0.291	0.307	0.323
E1	5.00	5.30	5.60	0.197	0.209	0.220
e	0.65 BSC			0.026 BSC		
L	0.55	0.75	0.95	0.022	0.030	0.037
L1	1.25 REF			0.049 REF		
L2	0.25 BSC			0.010 BSC		
R1	0.09	—	—	0.004	—	—
θ	0°	4°	8°	0°	4°	8°
D	7.90	8.20	8.50	0.311	0.323	0.335
N	24			24		

The product (or products) mentioned in this data sheet are no longer being manufactured and may not be ordered (OBS).

EXAR CORPORATION

24 PIN SSOP PACKAGE OUTLINE

Packaging Approval:

By: JL Date: 11/28/07

Drawing No: 24-PIN SSOP

Revision: B Sheet: 1 OF 1

REVISION HISTORY			
REV.	DISCRIPTION	DATE	APP'D
A	DRAWING ORIGINATION	04/24/06	JL
B	CHANGE DRAWING LOGO AND COMPANY NAME	11/28/07	JL

SP211, 28 pin SSOP versions are obsolete.

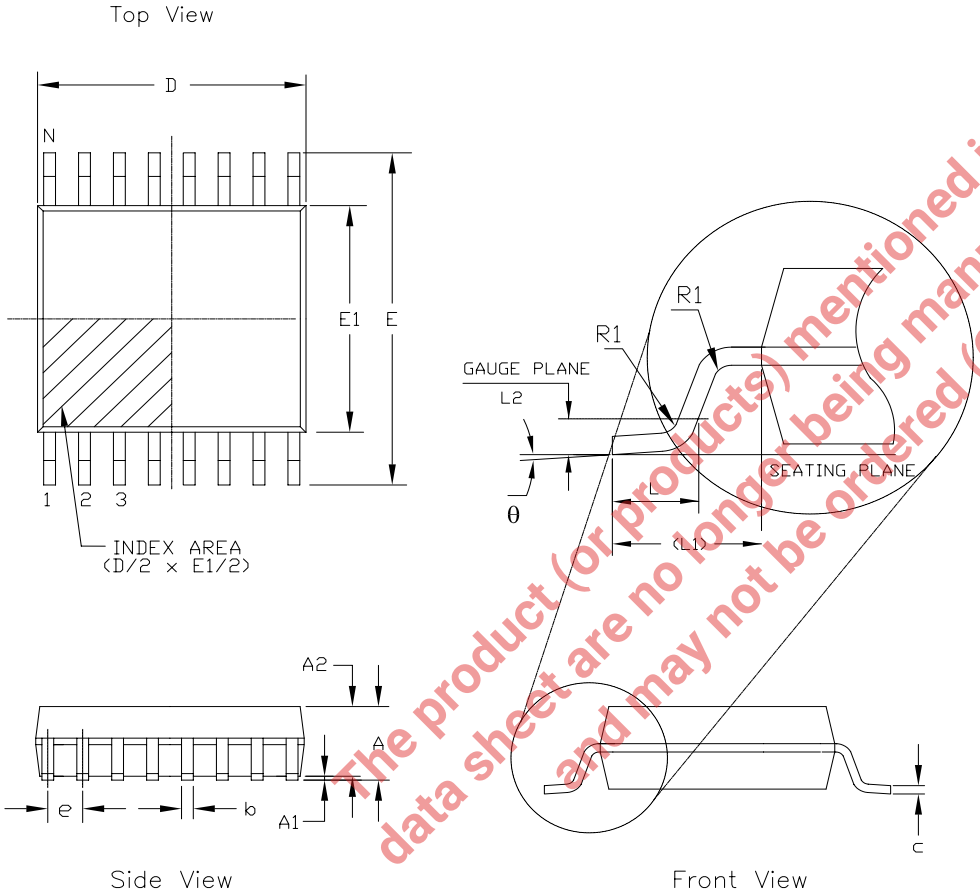

The product (or products) mentioned in this data sheet are no longer being manufactured and may not be ordered (OBS).

28 Pin SSOP JEDEC MO-150 Variation AH						
SYMBOLS	DIMENSIONS IN MM (Control Unit)			DIMENSIONS IN INCH (Reference Unit)		
	MIN	NOM	MAX	MIN	NOM	MAX
A	—	—	2.00	—	—	0.079
A1	0.05	—	—	0.002	—	—
A2	1.65	1.75	1.85	0.065	0.069	0.073
b	0.22	—	0.38	0.009	—	0.015
c	0.09	—	0.25	0.004	—	0.010
E	7.40	7.80	8.20	0.291	0.307	0.323
E1	5.00	5.30	5.60	0.197	0.209	0.220
e	0.65 BSC			0.026 BSC		
L	0.55	0.75	0.95	0.022	0.030	0.037
L1	1.25 REF			0.049 REF		
L2	0.25 BSC			0.010 BSC		
R1	0.09	—	—	0.004	—	—
θ	0°	4°	8°	0°	4°	8°
D	9.90	10.20	10.50	0.390	0.402	0.413
N	28			28		

EXAR Powering Connectivity		EXAR CORPORATION	
		28 PIN SSOP PACKAGE OUTLINE	
Packaging Approval:		Drawing No:	28-PIN SSOP
By: JL	Date: 11/28/07	Revision: B	Sheet: 1 OF 1

REVISION HISTORY			
REV.	DISCRIPTION	DATE	APP'D
A	DRAWING ORIGINATION	04/24/06	JL
B	CHANGE DRAWING LOGO AND COMPNAY NAME	11/28/07	JL

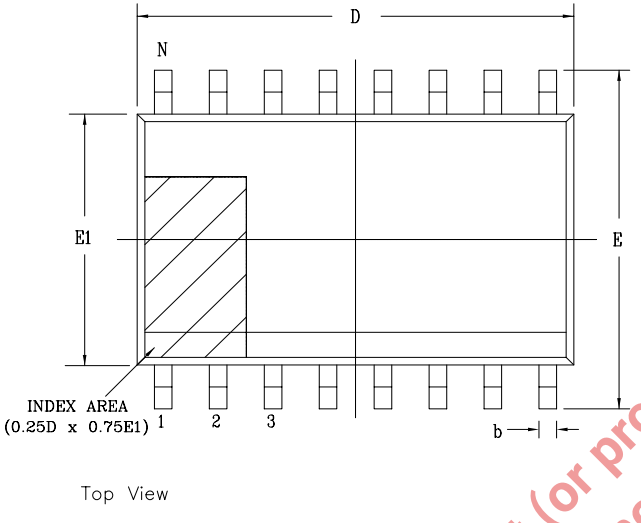

Top View

24 Pin SOICW JEDEC MS-013 Variation AD						
SYMBOLS	DIMENSIONS IN MM (Control Unit)			DIMENSIONS IN INCH (Reference Unit)		
	MIN	NOM	MAX	MIN	NOM	MAX
A	2.35	—	2.65	0.093	—	0.104
A1	0.10	—	0.30	0.004	—	0.012
A2	2.05	—	2.55	0.081	—	0.100
b	0.31	—	0.51	0.012	—	0.020
c	0.20	—	0.33	0.008	—	0.013
E	10.30 BSC			0.406 BSC		
E1	7.50 BSC			0.295 BSC		
e	1.27 BSC			0.050 BSC		
h	0.25	—	0.75	0.010	—	0.030
L	0.40	—	1.27	0.016	—	0.050
L1	1.40 REF			0.055 REF		
L2	0.25 BSC			0.010 BSC		
R	0.07	—	—	0.003	—	—
R1	0.07	—	—	0.003	—	—
θ	0°	—	8°	0°	—	8°
θ1	5°	—	15°	5°	—	15°
θ2	0°	—	—	0°	—	—
D	15.40 BSC			0.606 BSC		
N	24			24		

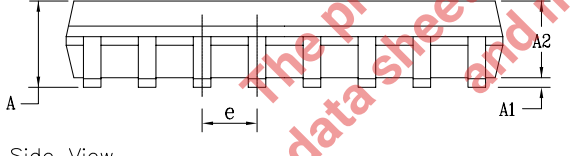

Side View

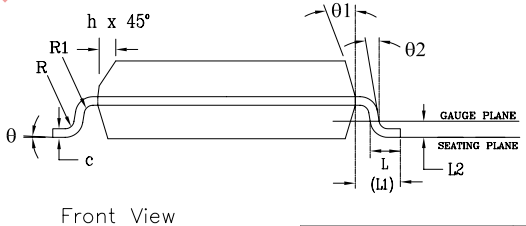

Front View

All SOICW versions are obsolete.

The product (or products) mentioned in this data sheet are no longer being manufactured and may not be ordered (OBS).

EXAR Powering Connectivity	EXAR CORPORATION	
	24 PIN SOICW PACKAGE OUTLINE	
Packaging Approval:	Drawing No: 24-PIN SOICW	
By: JL / Date: 11/28/07	Revision: B	Sheet: 1 OF 1

REVISION HISTORY			
REV.	DISCRIPTION	DATE	APP'D
A	DRAWING ORIGINATION	04/24/06	JL
B	CHANGE DRAWING LOGO AND COMPANY NAME	11/28/07	JL

All SOICW versions are obsolete.

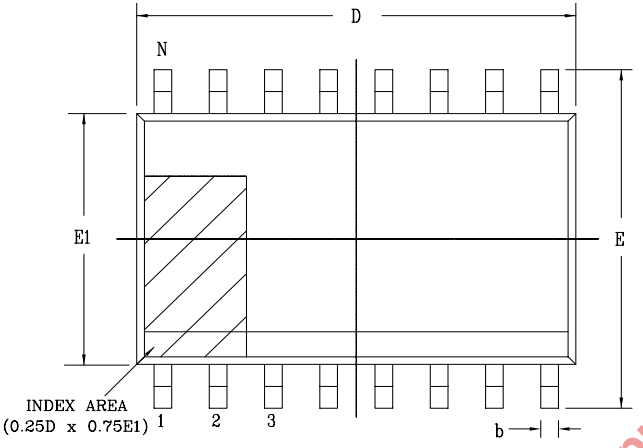

Top View

28 Pin SOICW JEDEC MS-013 Variation AE						
SYMBOLS	DIMENSIONS IN MM (Control Unit)			DIMENSIONS IN INCH (Reference Unit)		
	MIN	NOM	MAX	MIN	NOM	MAX
A	2.35	—	2.65	0.093	—	0.104
A1	0.10	—	0.30	0.004	—	0.012
A2	2.05	—	2.55	0.081	—	0.100
b	0.31	—	0.51	0.012	—	0.020
c	0.20	—	0.33	0.008	—	0.013
E	10.30 BSC			0.406 BSC		
E1	7.50 BSC			0.295 BSC		
e	1.27 BSC			0.050 BSC		
h	0.25	—	0.75	0.010	—	0.030
L	0.40	—	1.27	0.016	—	0.050
L1	1.40 REF			0.055 REF		
L2	0.25 BSC			0.010 BSC		
R	0.07	—	—	0.003	—	—
R1	0.07	—	—	0.003	—	—
θ	0°	—	8°	0°	—	8°
θ1	5°	—	15°	5°	—	15°
θ2	0°	—	—	0°	—	—
D	17.90 BSC			0.705 BSC		
N	28			28		

The product (or products) mentioned in this data sheet are no longer being manufactured and may not be ordered (OBS)

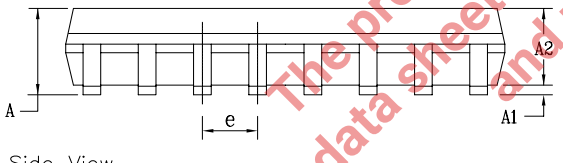

Side View

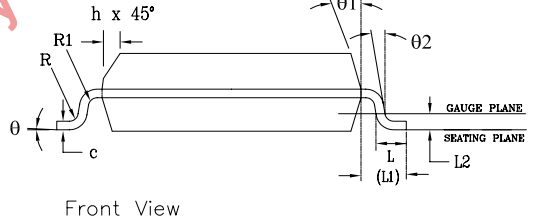

Front View

EXAR Powering Connectivity	EXAR CORPORATION	
	28 PIN SOICW PACKAGE OUTLINE	
Packaging Approval:	Drawing No: 28-PIN SOICW	
By: JL / Date: 11/28/07	Revision: B	Sheet: 1 OF 1

ORDERING INFORMATION[1], [2]

Part number	Drivers / Receivers	Temperature range	Package	Package Method	Lead-Free[3]
SP208CA-L/TR	4 / 4	0 to +70^{0}C	24 pin SSOP	Tape and Reel	Yes

Notes:

1. **SP206, SP207, SP211 and the WSOIC24 version of SP208 are obsolete.**
2. Refer to www.maxlinear.com/SP208 for most up-to-date Ordering Information.
3. Visit www.maxlinear.com for additional information on Environmental Rating.

The product (or products) mentioned in this data sheet are no longer being manufactured and may not be ordered (OBS)

REVISION HISTORY		
Date	Revision	Description
5-26-05	Rev B	Original SP200/204/206/207/208/211/213 Sipex Data sheet
7-16-10	1.0.0	Change revision to 1.0.0 and convert to Exar format. Remove EOL part numbers and associated verbiage. Update ordering information.
June 2011	1.0.1	SP207CA-L and SP207EA-L options removed per PDN 110510-01
August 2020	1.0.2	Update to MaxLinear logo. Update Ordering Information.

The product (or products) mentioned in this data sheet are no longer being manufactured and may not be ordered (OBS)

MaxLinear, Inc.
5966 La Place Court, Suite 100
Carlsbad, CA 92008
760.692.0711 p.
760.444.8598 f.
www.maxlinear.com

The content of this document is furnished for informational use only, is subject to change without notice, and should not be construed as a commitment by MaxLinear, Inc. MaxLinear, Inc. assumes no responsibility or liability for any errors or inaccuracies that may appear in the informational content contained in this guide. Complying with all applicable copyright laws is the responsibility of the user. Without limiting the rights under copyright, no part of this document may be reproduced into, stored in, or introduced into a retrieval system, or transmitted in any form or by any means (electronic, mechanical, photocopying, recording, or otherwise), or for any purpose, without the express written permission of MaxLinear, Inc.

Maxlinear, Inc. does not recommend the use of any of its products in life support applications where the failure or malfunction of the product can reasonably be expected to cause failure of the life support system or to significantly affect its safety or effectiveness. Products are not authorized for use in such applications unless MaxLinear, Inc. receives, in writing, assurances to its satisfaction that: (a) the risk of injury or damage has been minimized; (b) the user assumes all such risks; (c) potential liability of MaxLinear, Inc. is adequately protected under the circumstances.

MaxLinear, Inc. may have patents, patent applications, trademarks, copyrights, or other intellectual property rights covering subject matter in this document. Except as expressly provided in any written license agreement from MaxLinear, Inc., the furnishing of this document does not give you any license to these patents, trademarks, copyrights, or other intellectual property.

MaxLinear, the MaxLinear logo, and any MaxLinear trademarks, MxL, Full-Spectrum Capture, FSC, G.now, AirPHY and the MaxLinear logo are all on the products sold, are all trademarks of MaxLinear, Inc. or one of MaxLinear's subsidiaries in the U.S.A. and other countries. All rights reserved. Other company trademarks and product names appearing herein are the property of their respective owners.

© 2005 - 2020 MaxLinear, Inc. All rights reserved.