SP238A

+5V Powered Multi-Channel RS-232 Drivers/Receivers

- Operates from a Single +5V Power Supply
- Meets All RS-232D and V.28 Specifications
- ±30V Receiver Input Levels
- Low Power CMOS Operation
- Operates with 0.1µF ceramic capacitors
- Lead Free Packaging

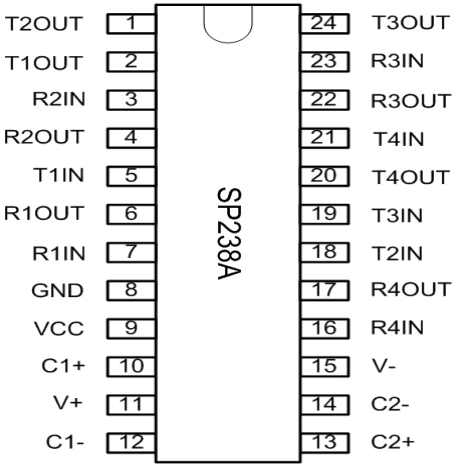

The product (or products) mentioned in this data sheet are no longer being manufactured and may not be ordered (OBS)

DESCRIPTION

The **SP238A** is a multi-channel RS-232 line transceiver that can fit most communication needs, especially where ±12V is not available. It features a built-in charge pump voltage converter, allowing it to operate from a single +5V power supply. All drivers and receivers meet all EIA RS-232D and CCITT V.28 requirements. The SP238A is available in a WSOIC lead free package.

SELECTION TABLE

Model	Power Supplies	No. of RS-232 Drivers	No. of RS-232 Receivers	External Components	Low Power Shutdown	TTL 3-State	Wake-up	No. of Pins
SP238A	+5V	4	4	4 Capacitors	No	No	No	24

ABSOLUTE MAXIMUM RATINGS

This is a stress rating only and functional operation of the device at these or any other conditions above those indicated in the operation sections of this specification is not implied. Exposure to absolute maximum rating conditions for extended periods of time may affect reliability.

V_{CC} ..... +6V
V^+ ..... (Vcc - 0.3V) to +13.2V
V^- 13.2V
Input Voltages:
T_{IN} ..... –0.3 to (Vcc +0.3V)
R_{IN} ..... ±30V

Output Voltages:
T_{OUT} ..... (V+, +0.3V) to (V-, -0.3V)
R_{OUT} ..... -0.3V to (Vcc +0.3V)
Short Circuit Duration:
T_{OUT} ..... Continuous
Power Dissipation:
Small Outline 375mW
(derate 7mW/°C above +70°C)

ELECTRICAL CHARACTERISTICS

V_{CC}=+5V±10%; All specifications T_{MIN} to T_{MAX} unless otherwise noted.

PARAMETERS	MIN.	TYP.	MAX.	UNITS	CONDITIONS
Power Requirements					
V_{CC} Power Supply Current		5.0	10.0	mA	No Load, T_A = +25°C
Shutdown Supply Current		1.0	10	µA	T_A = +25°C
Logic Inputs					
Input Logic Threshold, LOW			0.8	V	T_{IN}
Input Logic Threshold, HIGH	2.0			V	T_{IN}
Logic Pull-up Current		15	200	µA	T_{IN} = 0V
RS-232 Inputs					
RS-232 Input Voltage Range	-30		+30	V	
RS-232 Input Threshold, LOW	0.8	1.2		V	V_{CC} = 5V, T_A = +25°C
RS-232 Input Threshold, HIGH		1.7	2.4	V	V_{CC} = 5V, T_A = +25°C
RS-232 Input Hysteresis	0.2	0.5	1.0	V	V_{CC} = 5V
RS-232 Input Impedance	3	5	7	kΩ	T_A = +25°C, -15V ≤ V_{IN} ≤ +15V
Logic Outputs					
Output Voltage LOW			0.4	V	I_{OUT} = 3.2mA
Output Voltage HIGH	3.5			V	I_{OUT} = 1.0mA
RS-232 Outputs					
Propagation Delay		1.5		µs	RS-232 to TTL
Instantaneous Slew Rate			30	V/µs	C_L = 10pF, R_L = 3-7kΩ; T_A = +25°C
Transition Region Slew Rate		3		V/µs	C_L = 2500pF, R_L = 3kΩ; measured from +3V to -3V or -3V to +3V
Output Voltage Swing	+/-5.0			V	All Driver outputs loaded with 3kΩ to Ground
Output Resistance	300			Ω	V_{CC} = 0V; V_{OUT} = +/-2V
Output Short-Circuit Current		+/-10		mA	Infinite duration

The product (or products) mentioned in this data sheet are no longer being manufactured and may not be ordered (OBS)

PINOUT

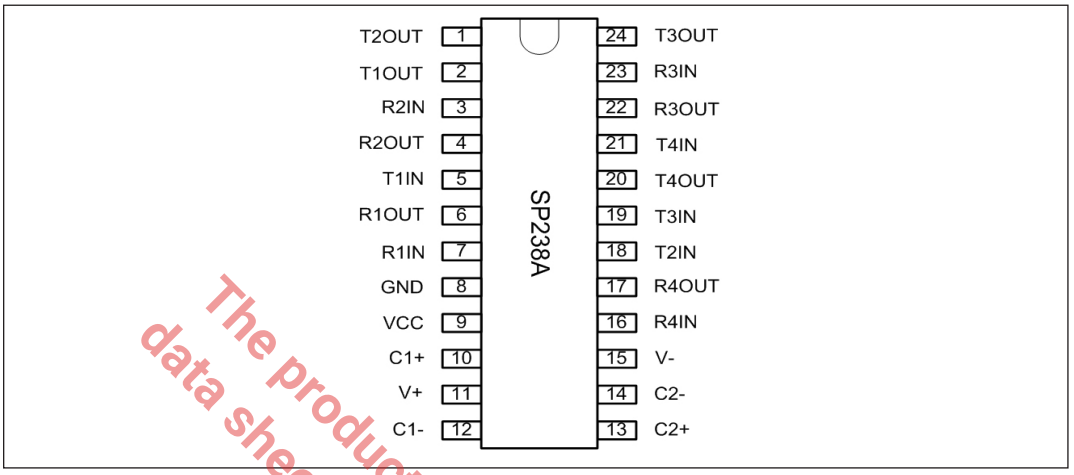

The product (or products) mentioned in this data sheet are no longer being manufactured and may not be ordered (OBS)

TYPICAL APPLICATIONS CIRCUIT

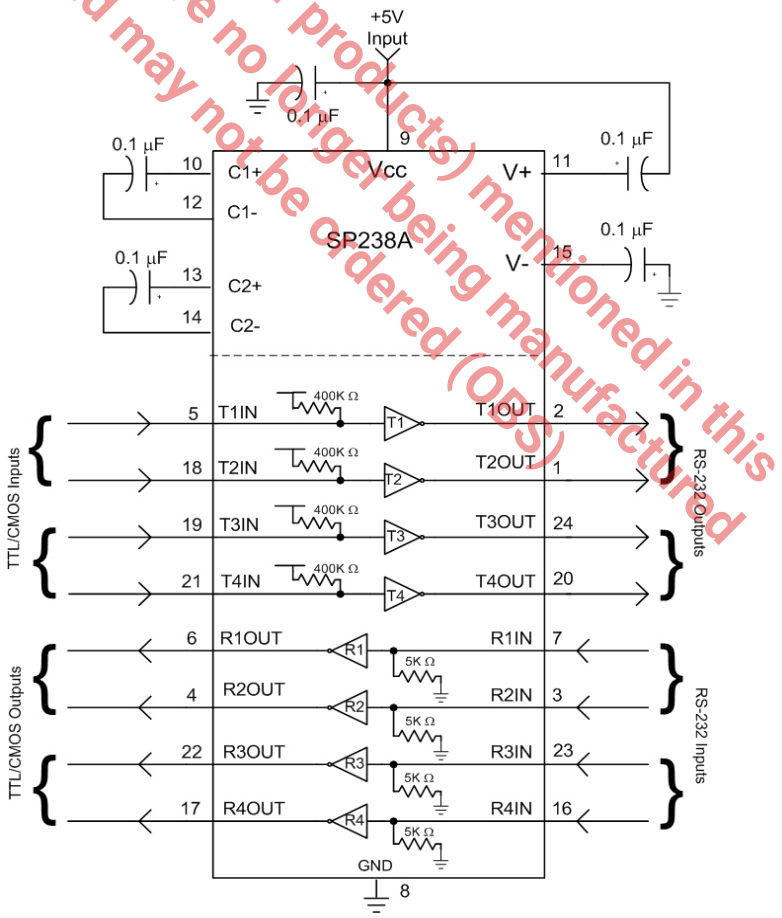

FEATURES…

The SP238A multi-channel RS-232 line transceiver provides 4 drivers and 4 receivers to fit most communication needs, especially those applications where ±12V is not available. The device features low power CMOS operation, which is particularly beneficial in battery-powered systems.

The device includes two charge pump voltage converters which allows it to operate from a single +5V supply. These converters convert the +5V input power to the minimum loaded voltage of ±5.0V for compliant RS-232 output levels. All drivers and receivers meet all EIA RS-232D and CCITT V.28 specifications.

The device is available for use over the commercial and industrial temperature ranges. It is packaged in a WSOIC package.

THEORY OF OPERATION

The SP238A is made up of three basic circuit blocks - 1) transmitter, 2) receiver and 3) charge pump.

Driver/Transmitter

The drivers are inverting transmitters, which accept TTL or CMOS inputs and output the RS-232 signals with an inverted sense relative to the input logic levels. The transmitter outputs are protected against infinite short-circuits to ground without degradation in reliability. Should the input of the driver be left open, an internal 400kΩ pull-up resistor to Vcc forces the input HIGH, thus committing the output to a low state.

The slew rate of the transmitter output is internally limited to a maximum of 30V/µs in order to meet the standards [EIA RS-232-D 2.1.7, Paragraph (5)]. The transition of the loaded output from V_{OL} to V_{OH} clearly meets the monotonicity requirements of the standard [EIA RS-232-D 2.1.7, Paragraphs (1) & (2)].

Receivers

The receivers convert RS-232 input signals to inverted TTL signals. Since the input is usually from a transmission line, where long cable lengths and system interference can degrade the signal, the inputs have a typical hysteresis margin of 500mV. This ensures that the receiver is virtually immune to noisy transmission lines.

The input thresholds are 0.8V minimum and 2.4V maximum, again well within the ±3V RS-232 requirements. The receiver inputs are also protected against voltages up to ±30V. Should an input be left unconnected, a 5kΩ pull-down resistor to ground will commit the output of the receiver to a high state.

In actual system applications, it is quite possible for signals to be applied to the receiver inputs before power is applied to the receiver circuitry. This occurs, for example, when a PC user attempts to print, only to realize the printer wasn't turned on. In this case an RS-232 signal from the PC will appear on the receiver input at the printer. When the printer power is turned on, the receiver will operate normally. All series devices are fully protected.

Charge Pump

The charge pump is a patented design and uses a unique approach compared to older less efficient designs. The charge pump requires 4 external capacitors and uses a four phase voltage shifting technique. The internal power supply consists of a regulated dual charge pump that provides output voltages of +/-5.5V. This is important to maintain compliant RS-232 levels regardless of power supply fluctuations. The charge pump operates in a discontinuous mode using an internal oscillator. If the voltages are less than a magnitude of 5.5V, the charge pump is enabled. If the output voltage exceed a magnitude of 5.5V then the charge pump is disabled. The internal oscillator controls the four phases of the voltage shifting. A description of each phase follows:

The product (or products) mentioned in this data sheet are no longer being manufactured and may not be ordered (OBS)

Phase 1

Vss charge store and double: The positive terminals of capacitors C1 and C2 are charged from Vcc with their negative terminals initially connected to ground. C1+ is then connected to ground and the stored charge from C1- is superimposed onto C2-. Since C2+ is still connected to Vcc the voltage potential across C2 is now 2 x Vcc.

Phase 2

Vss transfer and invert: Phase two connects the negative terminal of C2 to the Vss storage capacitor and the positive terminal of C2 to ground. This transfers the doubled and inverted (V-) voltage onto C4. Meanwhile, capacitor C1 is charged from Vcc in order to prepare it for its next phase.

Phase 3

Vdd charge store and double: Phase three is identical to the first phase. The positive terminals of C1 and C2 are charged from Vcc with their negative terminals initially connected to ground. C1+ is then connected to ground and the stored charge from C1- is superimposed onto C2-. Since C2+ is still connected to Vcc the voltage potential across capacitor C2 is now 2 x Vcc.

Phase 4

Vdd transfer: The fourth phase connects the negative terminal of C2 to ground and the positive terminal of C2 to the Vdd storage capacitor . This transfers the doubled (V+) voltage onto C3. Meanwhile, capacitor C1 is charged from Vcc to prepare it for its next phase.

Under lightly loaded conditions, the intelligent pump oscillator maximizes efficiency by running only as needed to maintain V+ and V- voltage levels. Since interface transceivers spend most of their time at idle, this power-efficient innovation can greatly reduce total power consumption. This improvement is made possible by the independent phase sequences of the Exar charge pump design.

The clock rate of the charge pump typically operates greater than 70kHz allowing the pump to operate efficiently using small 0.1uF capacitors. Efficient operation depends on the rapid charging and discharging of C1 and C2. Therefore, the capacitors should be mounted as close as possible to the IC and have a low ESR (equivalent series resistance). Inexpensive, surface mount ceramic capacitors are ideal for use on charge pump. If polarized capacitors are used the positive and negative terminals should be connected as shown on the typical operating circuit. A diagram of the 4 individual phases is shown in Figure 1.

The product (or products) mentioned in this data sheet are no longer being manufactured and may not be ordered (OBS)

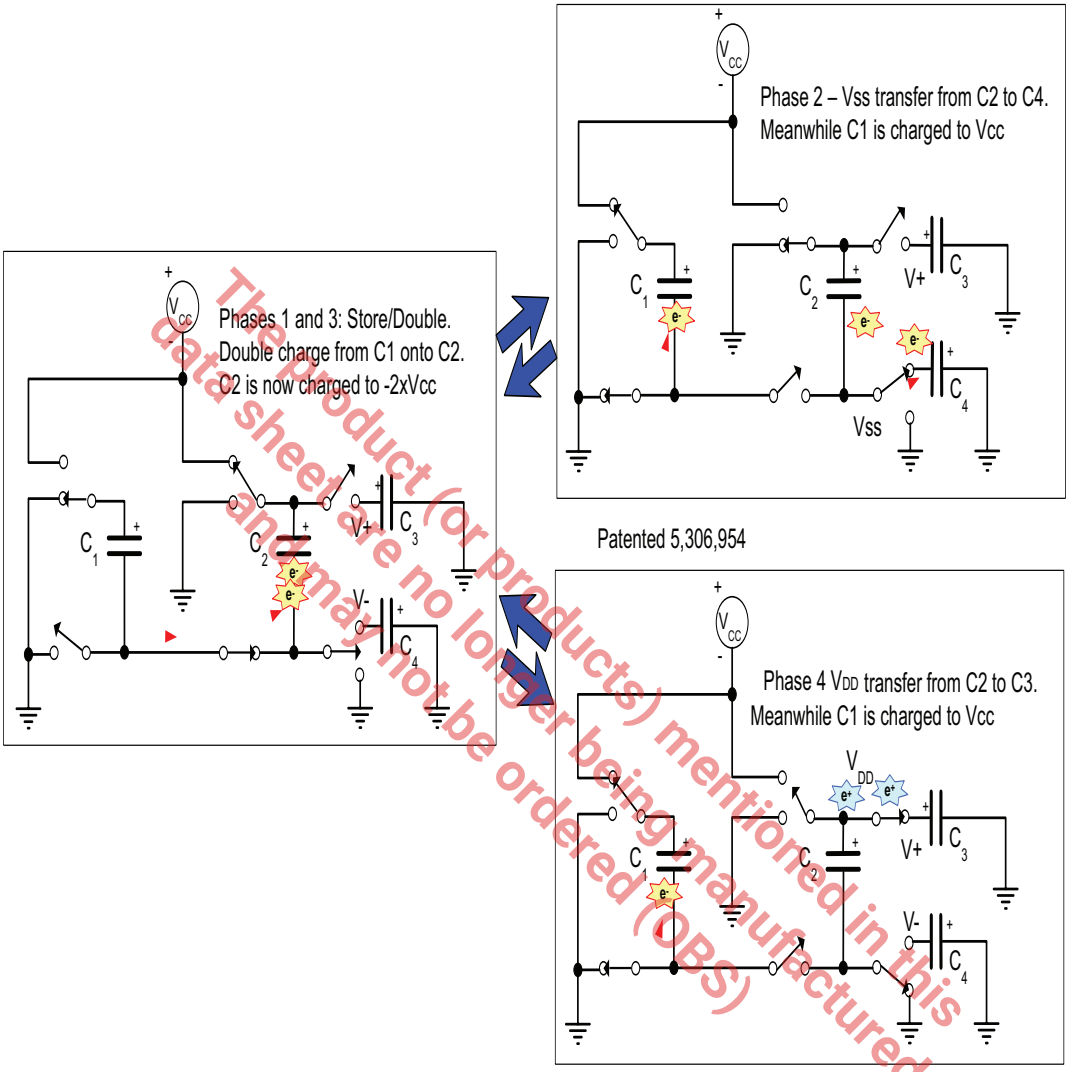

The product (or products) mentioned in this data sheet are no longer being manufactured and may not be ordered (OBS)

Figure 1. Charge pump phases

Protection From Shorts Exceeding ±15V

The driver outputs are protected against shorts to ground, other driver outputs, and V^+ or V^-. For protection against voltages exceeding ±15V, two back-to-back zener diodes connected to clamp the outputs to an acceptable voltage level are recommended. (Refer to Figure 2.)

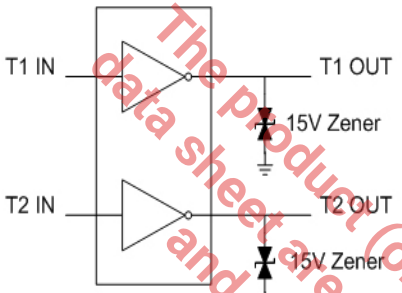

Figure 2. High Voltage Short-Circuit Protection

The product (or products) mentioned in this data sheet are no longer in manufacture and may not be ordered (OBS).

INTERFACE EXAMPLE - A MODEM ON THE IBM PC SERIAL PORT

The RS-232 standard defines 22 serial interface signals. These signals consist of ground lines, timing, data, control and test signals, plus a set of signals rarely used for a second data channel. Many of these signal lines are not used in typical RS-232 applications; in fact, the IBM® PC serial port is implemented using only nine pins.

For example, consider the case of a PC using this nine pin port to communicate with a peripheral device such as a modem. We see the following activity on each of the RS-232 lines as the computer and modem are activated and communicate with each other as well as the remote modem at the other end of the phone line.

Signal Ground (GND)

The Signal Ground pin acts as a reference for all the other signals. This pin is simply maintained at a 0V level to serve as a level to which all other signals are referenced. Both the PC and the modem will have this line connected to their respective internal ground lines.

Data Terminal Ready (DTR)

This is the pin the computer uses to tell peripheral devices that it is on-line and ready to communicate.

Data Set Ready (DSR)

Peripheral devices use this line to tell the computer that they are on-line and ready to communicate. When the modem is turned on and has completed its self-test routine (assuming it does one), it will send a signal to the PC by asserting this line.

Request To Send (RTS)

The computer activates this line to notify the peripheral device that it is ready to send data. In this example, the computer notifies the modem that it is ready to send data to be transmitted by the modem.

Clear To Send (CTS)

This is the line on which the peripheral device tells the computer that it is ready to receive data from the computer. If the modem was not ready, i.e. it was performing a loop-back self-test, for example, it would not assert this line. Once the modem was ready to receive data from the PC, it would assert this line. When it receives the **CTS** signal from the modem, the PC knows that a data transmission path has been established between itself and the modem.

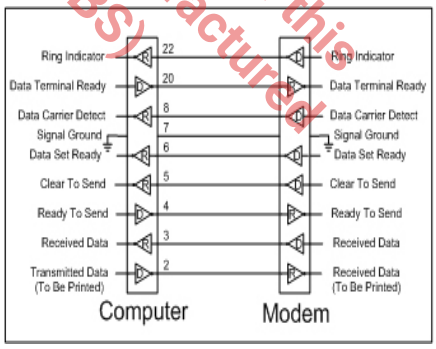

IBM Modem Port Interconnections

Transmitted Data (TD or TX)
This is the pin on which the computer sends the actual data signal to be transmitted, i.e. a positive voltage (+3V to +15V) to represent a logic “0”, and a negative voltage (-3V to -15V) to represent a logic “1”. The PC would send the data on this line to be transmitted by the modem.

Ring Indicator (RI)
This line is used by the peripheral device to tell the computer that a remote device wants to start communicating. The modem would activate the **RI** line to tell the computer that the remote modem was calling, i.e. the phone is ringing.

Data Carrier Detect (DCD)
This line is used by the modem to tell the computer that it has completed a transmission path with the remote modem, and to expect to start receiving data at any time.

Received Data (RD or RX)
This is the pin on which the modem sends the computer the incoming data signal, i.e. a positive voltage (+3V to +15V) to represent a logic “0”, and a negative voltage (-3V to -15V) to represent a logic “1”.

INTERFACE EXAMPLE - A PRINTER ON THE IBM PC SERIAL PORT
The RS-232 standard defines 22 serial interface signals. These signals consist of ground lines, timing, data, control and test signals, plus a set of signals rarely used for a second data channel. Many of these signal lines are not used in typical RS-232 applications; in fact, the IBM® PC serial port is implemented using only nine pins. For example, consider the case of a PC using this nine pin port to communicate with a peripheral device such as a printer. We see the following activity on each of the RS-232 lines as the computer and printer are activated and communicate.

Signal Ground (GND)
The Signal Ground pin acts as a reference for all the other signals. This pin is simply maintained at a 0V level to serve as a level to which all other signals are referenced. Both the PC and the printer will have this line connected to their respective internal ground lines.

Data Terminal Ready (DTR)
This is the pin the computer uses to tell peripheral devices that it is on-line and ready to communicate. Once the computer is powered-up and ready, it will send out a signal on the **DTR** to inform the printer that it is powered-up and ready to go. The printer really doesn’t care, since it will simply print data as it is received. Accordingly, this pin is not needed at the printer.

Data Set Ready (DSR)
Peripheral devices use this line to tell the computer that they are on-line and ready to communicate. When the printer is turned on and has completed its self-test routine (assuming it does one), it will send a signal to the PC by asserting this line.

Request To Send (RTS)
The computer activates this line to notify the peripheral device that it is ready to send data. In this example, the computer notifies the printer that it is ready to send data to be printed by the printer.

Clear To Send (CTS)
This is the line on which the peripheral device tells the computer that it is ready to receive data from the computer. If the printer was not ready, i.e. it was out of paper, for example, it would not assert this line. Once the printer was ready to receive data from the PC, it would assert this line. When it receives the **CTS** signal from the printer, the PC knows that a data transmission path has been established between itself and the printer.

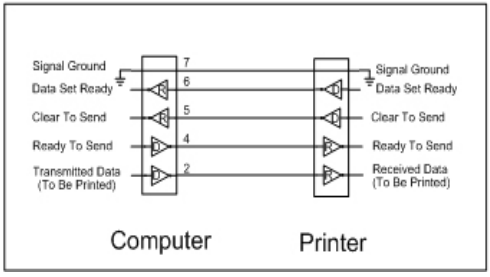

IBM Printer Port Interconnections

The product (or products) mentioned in this data sheet are no longer being manufactured and may not be ordered (OBS)

Transmitted Data (TD or TX)

This is the pin on which the computer sends the actual data signal representing the actual information to be printed, i.e. a positive voltage (+3V to +15V) to represent a logic “0”, and a negative voltage (-3V to -15V) to represent a logic “1”.

Ring Indicator (RI)

This line is used by the peripheral device to tell the computer that a remote device wants to start communicating. A modem would activate the **RI** line to tell the computer that a remote modem was calling, i.e. the phone is ringing. In the case of a printer, this line is unused.

Data Carrier Detect (DCD)

This line is used by a peripheral device to tell the computer to expect to start receiving data at any time. Since the printer would not be sending data to the PC in this case this line is not needed.

Received Data (RD or RX)

This is the pin on which the computer receives the incoming data signal, i.e. a positive voltage (+3V to +15V) to represent a logic “0”, and a negative voltage (-3V to -15V) to represent a logic “1”. Again, in this instance, since the printer will not be sending the PC any data, this line is not needed.

The product (or products) mentioned in this data sheet are no longer being manufactured and may not be ordered (OBS)

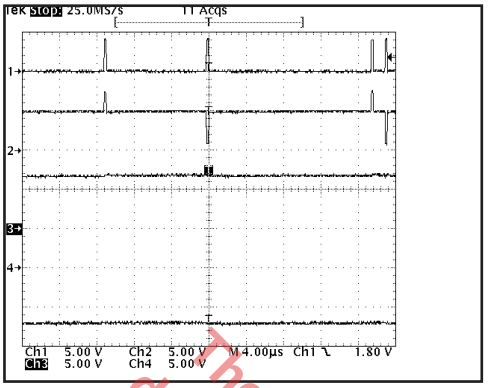

Figure 3, Charge pump waveforms with no load (Ch1 = C1+, Ch2 = C2+, Ch3 = V+, Ch4 = V-).

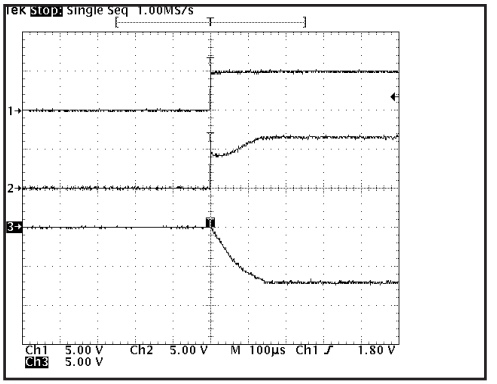

Figure 6, Charge pump outputs at start up (Ch1 = Vcc, Ch2 = V+, Ch3 = V-).

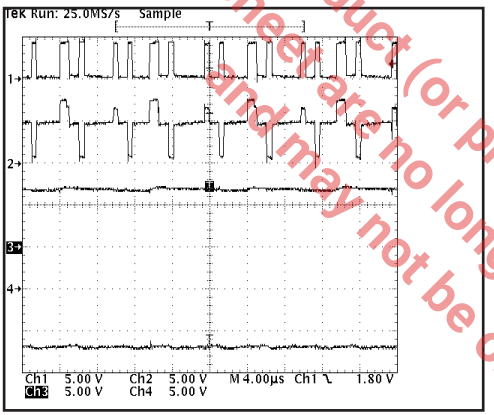

Figure 4, Charge pump waveforms when fully loaded with 3k ohms (Ch1 = C1+, Ch2 = C2+, Ch3 = V+, Ch4 = V-).

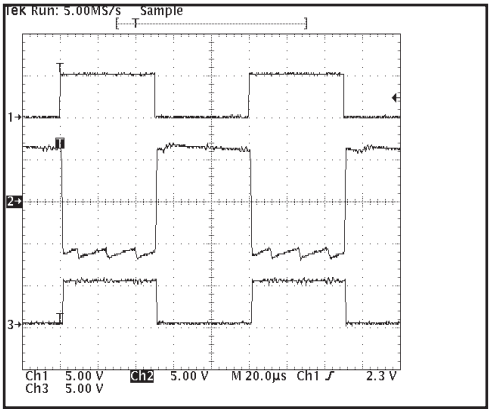

Figure 5, Loopback results at 10kHz and 2500pF load (Ch1 = TXin, Ch2 = TXout/ RXin, Ch3 = RXout).

The product (or products) mentioned in this data sheet are no longer being manufactured and may not be ordered (OBS)

REVISION HISTORY			
REV.	DISCRIPTION	DATE	APP'D
A	DRAWING ORIGINATION	04/24/06	JL
B	CHANGE DRAWING LOGO AND COMPNAY NAME	11/28/07	JL

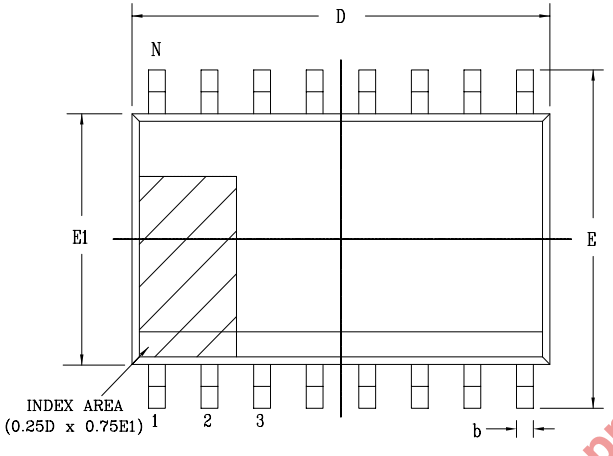

Top View

24 Pin SOICW JEDEC MS-013 Variation AD						
SYMBOLS	DIMENSIONS IN MM (Control Unit)			DIMENSIONS IN INCH (Reference Unit)		
	MIN	NOM	MAX	MIN	NOM	MAX
A	2.35	—	2.65	0.093	—	0.104
A1	0.10	—	0.30	0.004	—	0.012
A2	2.05	—	2.55	0.081	—	0.100
b	0.31	—	0.51	0.012	—	0.020
c	0.20	—	0.33	0.008	—	0.013
E	10.30 BSC			0.406 BSC		
E1	7.50 BSC			0.295 BSC		
e	1.27 BSC			0.050 BSC		
h	0.25	—	0.75	0.010	—	0.030
L	0.40	—	1.27	0.016	—	0.050
L1	1.40 REF			0.055 REF		
L2	0.25 BSC			0.010 BSC		
R	0.07	—	—	0.003	—	—
R1	0.07	—	—	0.003	—	—
θ	0°	—	8°	0°	—	8°
θ1	5°	—	15°	5°	—	15°
θ2	0°	—	—	0°	—	—
D	15.40 BSC			0.606 BSC		
N	24			24		

The product (or products) mentioned in this data sheet are no longer being manufactured and may not be ordered (ONP).

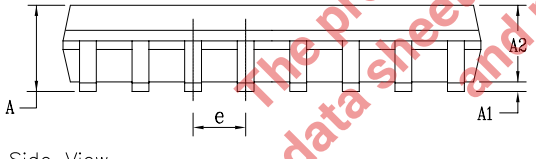

Side View

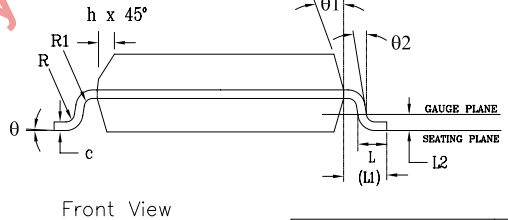

Front View

EXAR Powering Connectivity	EXAR CORPORATION		
	24 PIN SOICW PACKAGE OUTLINE		
Packaging Approval:	Drawing No:	24-PIN SOICW	
By: JL / Date: 11/28/07	Revision: B	Sheet: 1 OF 1	

ORDERING INFORMATION

SP238ACT-L	0°C to +70°C	24 pin WSOIC
SP238ACT-L/TR	0°C to +70°C	24 pin WSOIC
SP238AET-L	-40°C to +85°C	24 pin WSOIC
SP238AET-L/TR	-40°C to +85°C	24 pin WSOIC

-L = RoHS packaging

/TR = Tape and Reel

Pack quantity is 1,500 for WSOIC.

The product (or products) mentioned in this data sheet are no longer being manufactured and may not be ordered (OBS)

REVISION HISTORY

Date	Revision	Description
8/3/04	-	Sipex Legacy Data Sheet
07/14/10	1.0.0	Convert to Exar Format. Update theory of operation and Driver output voltage levels to reflect regulated charge pump. Remove various EOL products. Update performance curves to reflect new charge pump design. Redraw Pinout and Typ Apps circuit to improve clarity.

Notice

EXAR Corporation reserves the right to make changes to any products contained in this publication in order to improve design, performance or reliability. EXAR Corporation assumes no representation that the circuits are free of patent infringement. Charts and schedules contained herein are only for illustration purposes and may vary depending upon a user's specific application. While the information in this publication has been carefully checked; no responsibility, however, is assumed for inaccuracies.

EXAR Corporation does not recommend the use of any of its products in life support applications where the failure or malfunction of the product can reasonably be expected to cause failure of the life support system or to significantly affect its safety or effectiveness. Products are not authorized for use in such applications unless EXAR Corporation receives, in writing, assurances to its satisfaction that: (a) the risk of injury or damage has been minimized ; (b) the user assumes all such risks; (c) potential liability of EXAR Corporation is adequately protected under the circumstances.

Copyright 2010 EXAR Corporation

Datasheet July 2010

Send your Interface technical inquiry with technical details to: uarttechsupport@exar.com

Reproduction, in part or whole, without the prior written consent of EXAR Corporation is prohibited.