XRP7664

2A 18V Synchronous Step-Down Converter

March 2013 Rev. 2.0.1

GENERAL DESCRIPTION

The XRP7664 is a synchronous current-mode PWM step down (buck) voltage regulator capable of a continuous output current up to 2Amps. A wide 4.5V to 18V input voltage range allows for single supply operations from industry standard 5V and 12V power rails.

With a 340kHz constant operating frequency and integrated high and low side 100mΩ/100mΩ MOSFETs, the XRP7664 reduces the overall component count and solution footprint. Current-mode control provides fast transient response and cycle-by-cycle current limit. An adjustable soft-start prevents inrush current at turn-on, and in shutdown mode the supply current drops to 0.1μA.

Built-in output over voltage (open load), over temperature, cycle-by-cycle over current and under voltage lockout (UVLO) protections insure safe operations under abnormal operating conditions.

The XRP7664 is a pin and function compatible device to MP1482.

The XRP7664 is offered in a RoHS compliant, "green"/halogen free 8-pin SOIC package.

APPLICATIONS

- **Distributed Power Architectures**
- **Point of Load Converters**
- **Audio-Video Equipments**
- **Medical & Industrial Equipments**

FEATURES

- **2A Continuous Output Current**
- **4.5V to 18V Wide Input Voltage**
- **PWM Current Mode Control**
  - 340kHz Constant Operations
  - Up to 95% Efficiency
- **Adjustable Output Voltage**
  - 0.925V to 16V Range
  - ±2% Accuracy
- **Programmable Soft-Start and Enable Function**
- **Built-in Thermal, Over Current, UVLO and Output Over Voltage Protections**
- **Pin/Function Compatible to MP1482**
- **RoHS Compliant, "Green"/Halogen Free 8-Pin SOIC Package**

The product (or products) mentioned in this data sheet are no longer being manufactured and may not be ordered (OBS)

TYPICAL APPLICATION DIAGRAM

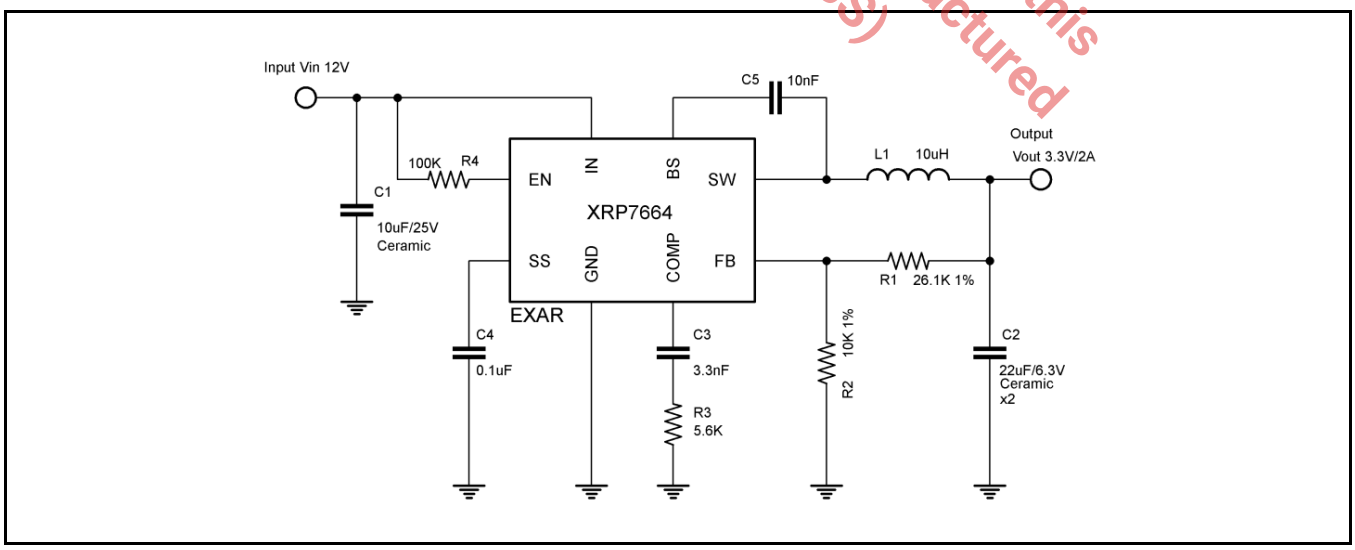

Fig. 1: XRP7664 Application Diagram

ABSOLUTE MAXIMUM RATINGS

These are stress ratings only and functional operation of the device at these ratings or any other above those indicated in the operation sections of the specifications below is not implied. Exposure to absolute maximum rating conditions for extended periods of time may affect reliability.

Supply Voltage V_{IN} ..... -0.3V to 20V
Switch Node Voltage V_{SW} 21V
Boost Voltage V_{BS} ..... -0.3 to V_{SW}+6V
Enable Voltage V_{EN} ..... -0.3 to V_{IN}
All Other Pins ..... -0.3 to +6V
Junction Temperature ..... 150°C
Storage Temperature ..... -65°C to 150°C
Lead Temperature (Soldering, 10 sec) ..... 260°C
ESD Rating (HBM - Human Body Model) 2kV
ESD Rating (MM - Machine Model) 200V
Moisture Sensitivity Level (MSL) 3

OPERATING RATINGS

Input Voltage V_{IN} ..... 4.50V to 18V
Ambient Operating Temperature ..... -40°C to 85°C
Maximum Output Current ..... 2A min
Thermal Resistance θ_{JA} ..... 105°C/W

The product (or products) mentioned in this data sheet are no longer being manufactured and may not be ordered (OBS)

ELECTRICAL SPECIFICATIONS

Specifications are for an Operating Ambient Temperature of T_A = 25°C only; limits applying over the full Ambient Operating Temperature range are denoted by a "•". Minimum and Maximum limits are guaranteed through test, design, or statistical correlation. Typical values represent the most likely parametric norm at T_A = 25°C, and are provided for reference purposes only. Unless otherwise indicated, V_{IN} = V_{EN} = 12V, V_{OUT}=3.3V.

Parameter	Min.	Typ.	Max.	Units		Conditions
Shutdown Supply Current		0.1	10	µA		V_{EN}≤0.75V
Quiescent Current		1.2	1.4	mA		V_{EN}=3V, V_{FB}=1V
Feedback Voltage V_{FB}	0.907	0.925	0.943	V		
Feedback Overvoltage Threshold		1.1		V		
Feedback Bias Current	-0.1		0.1	µA		V_{FB}=1V
Error Amplifier Voltage Gain A_{EA} (Note 1)		400		V/V		
Error Amplifier Transconductance G_{EA}		800		µA/V		
COMP to Current Sense Transconductance G_{CS}		3.5		A/V		
High-Side switch On Resistance R_{DSONH} (Note 2)		100		mΩ		I_{SW}=0.2A&0.7A
Low-Side switch On Resistance R_{DSONL} (Note 2)		100		mΩ		I_{SW}=-0.2A&-0.7A
High-Side switch Leakage Current		0.1	10	µA		V_{IN}=18V, V_{EN}=0V, V_{SW}=0V
High-Side Switch Current Limit	2.7	3.5		A		
Low-Side Switch Current Limit		1.4		A		From Drain to Source
Oscillator Frequency F_{OSC1}	280	340	400	kHz		
Short Circuit Oscillator Frequency F_{OSC2}		90		kHz		
Maximum Duty Cycle D_{MAX}		90		%		V_{FB}=0.85V
Minimum Duty Cycle D_{MIN}			0	%		V_{FB}=1V
EN Enable Threshold	2.2	2.5	2.7	V		
EN Enable Threshold Voltage Hysteresis (Note 1)		210		mV		
UVLO Threshold	3.65	4.00	4.25	V		V_{IN} Rising

Parameter	Min.	Typ.	Max.	Units		Conditions
UVLO Hysteresis		0.20		V		
Soft-start Current		6		µA		
Soft-start Time (Note 1)		15		ms		C_{SS}=0.1µF
Thermal Shutdown (Note 1)		160		°C		
Thermal Shutdown Hysteresis (Note 1)		30		°C		

Note 1: Guaranteed by design.
Note 2: $R_{DSON}=(V_{SW1}-V_{SW2})/(I_{SW1}-I_{SW2})$

BLOCK DIAGRAM

The product (s) mentioned in this data sheet are no longer being manufactured and may not be ordered (OBS)

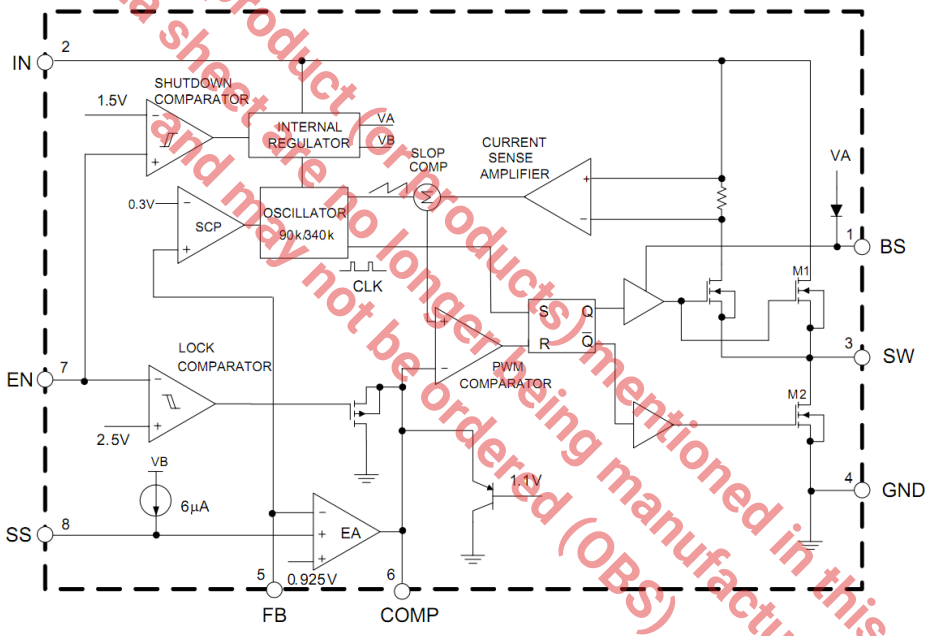

Fig. 2: XRP7664 Block Diagram

PIN ASSIGNMENT

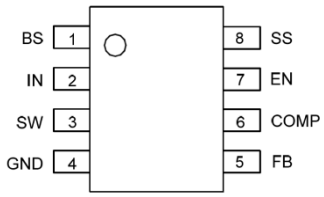

Fig. 3: XRP7664 Pin Assignment (SOIC-8)

PIN DESCRIPTION

Name	Pin Number	Description
BS	1	Bootstrap pin. Connect a 0.01µF or greater bootstrap capacitor between the BS pin and the SW pin. The voltage across the bootstrap capacitor drives the internal high-side power MOSFET.
IN	2	Power input pin. A capacitor should be connected between the IN pin and GND pin to keep the input voltage constant.
SW	3	Power switch output pin. This pin is connected to the inductor and the bootstrap capacitor.
GND	4	Ground signal pin.
FB	5	Feedback pin. An external resistor divider connected to FB programs the output voltage. If the feedback pin exceeds 1.1V the over-voltage protection will trigger. If the feedback voltage drops below 0.3V the oscillator frequency is lowered to achieve short-circuit protection.
COMP	6	Compensation pin. This is the output of transconductance error amplifier and the input to the current comparator. It is used to compensate the control loop. Connect an RC network form this pin to GND.
EN	7	Control input pin. Forcing this pin above 2.7V enables the IC. Forcing this pin below 0.75V shuts down the IC. Pull up to VIN with 100kΩ resistor for automatic startup.
SS	8	Soft-start control input pin. Connect a capacitor from SS to GND to set the soft-start period. A 0.1µF capacitor sets the soft start period to 15ms. To disable the soft-start feature, leave SS unconnected.

ORDERING INFORMATION

Part Number	Temperature Range	Marking	Package	Packing Quantity	Note 1	Note 2
XRP7664IDTR-F	-40°C≤T_A≤+85°C	XRP7664I YYWWF X	SOIC-8	2.5K/Tape & Reel	RoHS Compliant Halogen Free	
XRP7664EVB	XRP7664 Evaluation Board					

"YY" = Year – "WW" = Work Week – "X" = Lot Number; when applicable.

The product (or products) mentioned in this data sheet are no longer being manufactured and may not be ordered (OBS)

TYPICAL PERFORMANCE CHARACTERISTICS

All data taken at V_{IN} = 12V, V_{OUT}=3.3V, T_J = T_A = 25°C, unless otherwise specified - Schematic and BOM from Application Information section of this datasheet.

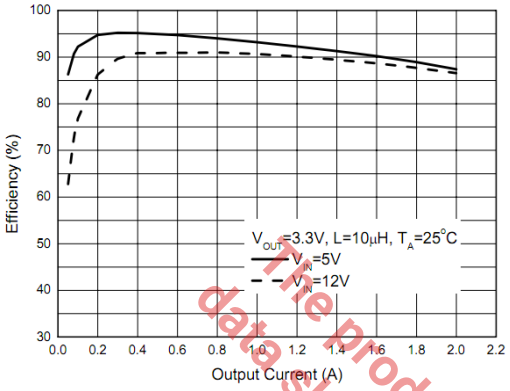

Fig. 4: Efficiency versus output current

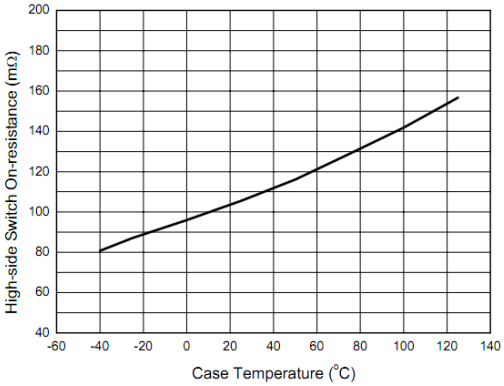

Fig. 5: R_{DSONH} versus case temperature

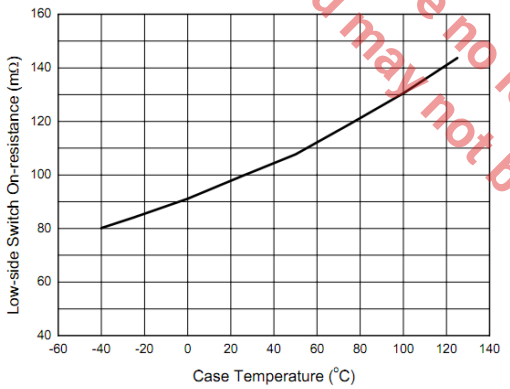

Fig. 6: R_{DSONL} versus case temperature

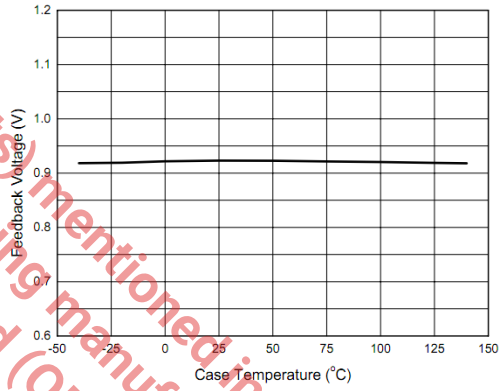

Fig. 7: Feedback voltage versus case temperature

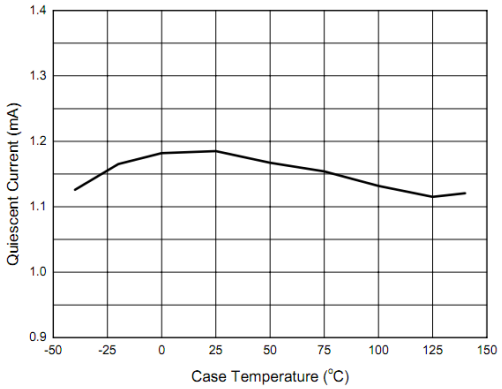

Fig. 8: Quiescent current versus case temperature

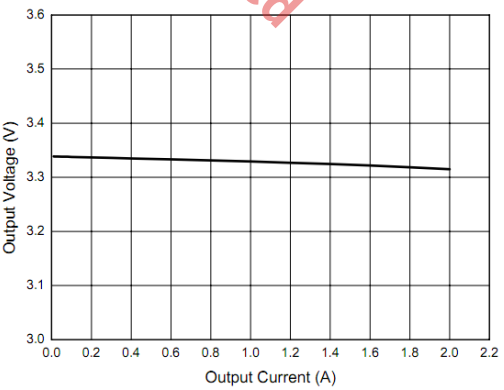

Fig. 9: Output voltage versus output current

The product (or products) mentioned in this data sheet are no longer being manufactured and may not be ordered (OBS)

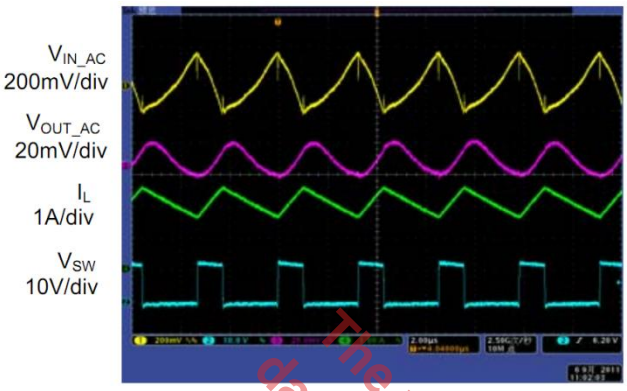

Fig. 10: Output voltage ripple, I_{OUT}=2A
Base Time 2µs/div

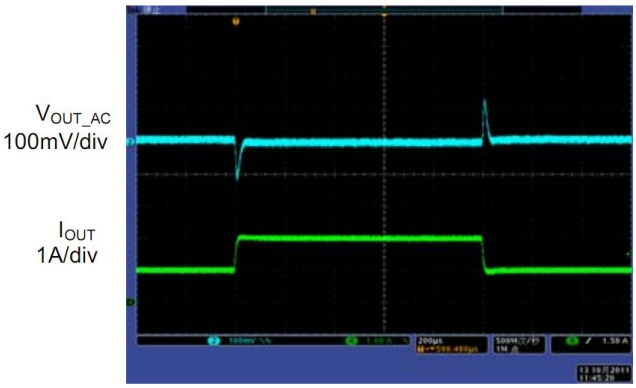

Fig. 11: Load transient (I_{OUT}=1A to 2A)
Base Time 200µs/div



Fig. 12: Enable turn on (R_{LOAD}=1.65Ω)
Base Time 10ms/div

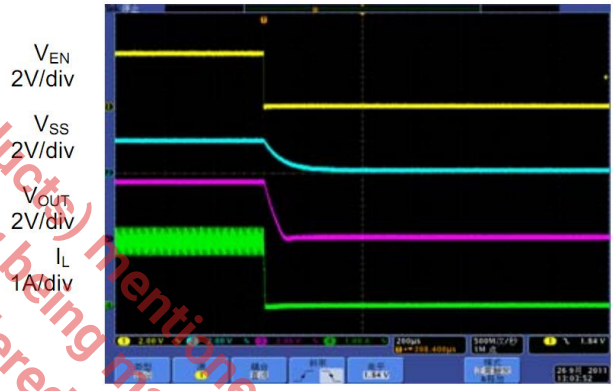

Fig. 13: Enable turn off (R_{LOAD}=1.6Ω)
Base Time 200µs/div

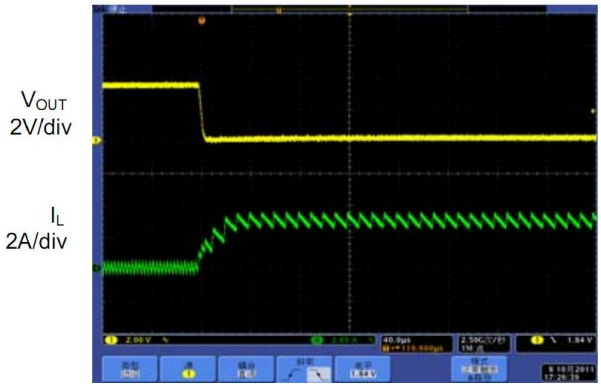

Fig. 14: Short-circuit protection, I_{OUT}=2A
Base Time 40µs/div

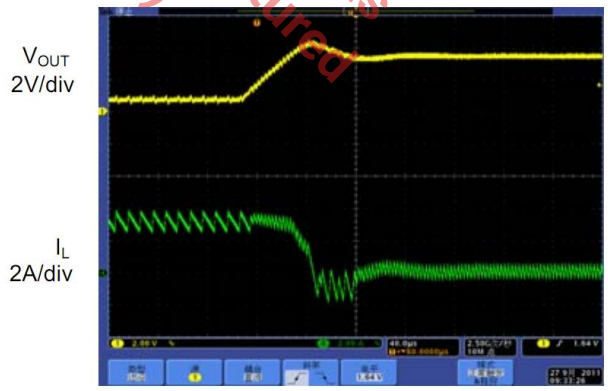

Fig. 15: Short-circuit recovery, I_{OUT}=2A
Base Time 40µs/div

The product (or products) mentioned in this data sheet are no longer being manufactured and may not be ordered (OBS)

THEORY OF OPERATION

FUNCTIONAL DESCRIPTION

The XRP7664 is a synchronous, current-mode, step-down regulator. It regulates input voltages from 4.5V to 18V and supplies up to 2A of continuous load current. The XRP7664 uses current-mode control to regulate the output voltage. The output voltage is measured at FB through a resistive voltage divider and input to a transconductance error amplifier. The high-side switch current is compared to the output of the error amplifier to control the output voltage. The regulator utilizes internal N-channel MOSFETs to step-down the input voltage. A bootstrapping capacitor connected between BS and SW acts as a supply for high-side MOSFET. This capacitor is charged from the internal 5V supply when SW node is low. The XRP7664 has several powerful protection features including OCP, OVP, OTP, UVLO and output short-circuit.

PROGRAMMABLE SOFT-START

The soft-start time is fully programmable via CSS capacitor, placed between the SS and GND pin. The CSS is charged by a 6µA constant-current source, generating a ramp signal fed into non-inverting input of the error amplifier. This ramp regulates the voltage on comp pin during the regulator startup, thus realizing soft-start. Calculate the required CSS from:

$$CSS = tss \times \frac{6\mu A}{V_{FB}}$$

Where:

tss is the required soft-start time

V_{FB} is the feedback voltage (0.925V nominal)

ENABLE FUNCTION

The XRP7664 is enabled by raising the voltage on the EN pin above 2.5V nominally. Connect the EN pin to the VIN via a 100kΩ resistor for automatic start-up. Shutdown is achieved by pulling the EN pin voltage below 1.1V nominally.

OVERCURRENT PROTECTION OCP

The OCP protects against accidental increase in load current that can cause the regulator to fail. The current of internal switch M1 is monitored. If this current reaches 3.5A then M1 is turned off until next switching cycle.

SHORT-CIRCUIT PROTECTION

If there is short-circuit across the output, the feedback voltage V_{FB} will droop. If V_{FB} drops below 0.3V the XRP7664 will detect a short-circuit condition and reduce the switching frequency to 90kHz for system protection. The regulator will restart once the short-circuit has been removed.

OVERVOLTAGE PROTECTION OVP

The XRP7664 has internal OVP. When V_{OUT} exceeds the OVP threshold (when V_{FB} exceeds 1.1V) the power switching will be turned off. The XRP7664 will restart when overvoltage condition is removed.

OVER-TEMPERATURE PROTECTION OTP

If the junction temperature exceeds 160°C the OTP circuit is triggered, turning off the internal control circuit and switched M1 and M2. When junction temperature drops below 130°C the XRP7664 will restart.

The product (or products) mentioned in this data sheet are no longer being manufactured and may not be ordered (OBS)

APPLICATION INFORMATION

SETTING THE OUTPUT VOLTAGE

Use an external resistor divider to set the output voltage. Program the output voltage from:

$$R1 = R2 \times \left(\frac{V_{OUT}}{0.925V} - 1\right)$$

Where:

R1 is the resistor between V_{OUT} and FB

R2 is the resistor between FB and GND (nominally 10kΩ)

0.925V is the nominal feedback voltage.

OUTPUT INDUCTOR

Select the output inductor for inductance L, DC current rating I_{DC} and saturation current rating I_{SAT}. I_{DC} should be larger than regulator output current. I_{SAT}, as a rule of thumb, should be 50% higher than the regulator output current. Since the regulator is rated at 2A then I_{DC}≥2A and I_{SAT}≥3A. Calculate the inductance from:

$$L = (V_{IN} - V_{OUT})\left(\frac{V_{OUT}}{\Delta I_L \times f_s \times V_{IN}}\right)$$

Where:

ΔI_L is peak-to-peak inductor current ripple nominally set to 30%-40% of I_{OUT}

f_S is nominal switching frequency (340kHz)

As an example, inductor values for several common output voltages are shown in tables 1 and 2. Note that example inductors shown in tables 1 and 2 are COOPER-Bussmann shielded inductors. If the target application is not sensitive to EMI then unshielded inductors may be used.

VOUT(V)	$\Delta I_{L(p-p)}$(A)	L(µH)	Inductor Example
5.0	0.86	10	DR74-100-R
3.3	0.70	10	DR74-100-R
2.5	0.70	8.2	DR74-8R2-R
1.8	0.66	6.8	DR74-6R8-R
1.5	0.57	6.8	DR74-6R8-R
1.2	0.68	4.7	DR74-4R7-R

Table 1: Suggested Inductor Values for V_{IN}=12V and I_{OUT}=2A

VOUT(V)	$\Delta I_{L(p-p)}$(A)	L(µH)	Inductor Example
3.3	0.70	4.7	DR74-4R7-R
2.5	0.78	4.7	DR74-4R7-R
1.8	0.72	4.7	DR74-4R7-R
1.5	0.66	4.7	DR74-4R7-R
1.2	0.57	4.7	DR74-4R7-R

Table 2: Suggested Inductor Values for V_{IN}=5V and I_{OUT}=2A

OUTPUT CAPACITOR C_{OUT}

Select the output capacitor for voltage rating, capacitance C_{OUT} and Equivalent Series Resistance ESR. The voltage rating, as a rule of thumb, should be at least twice the output voltage. When calculating the required capacitance, usually the overriding requirement is current load-step transient. If the unloading transient (i.e., when load transitions from a high to a low current) is met, then usually the loading transient (when load transitions from a low to a high current) is met as well. Therefore calculate the C_{OUT} based on the unloading transient requirement from:

$$C_{OUT} = L \times \left(\frac{{I_{High}}^2 - {I_{Low}}^2}{(V_{OUT} + V_{transient})^2 - {V_{OUT}}^2}\right)$$

Where:

L is the inductance calculated in the preceding step

I_{High} is the value of load-step prior to unloading. This is nominally set equal to regulator current rating (2A).

I_{Low} is the value of load-step after unloading. This is nominally set equal to 50% of regulator current rating (1A).

$V_{transient}$ is the maximum permissible voltage transient corresponding to the load step mentioned above. $V_{transient}$ is typically specified from 3% to 5% of V_{OUT}.

ESR of the capacitor has to be selected such that the output voltage ripple requirement ΔV_{OUT}, nominally 1% of V_{OUT}, is met. Voltage ripple ΔV_{OUT} is mainly composed of two components: the resistive ripple due to ESR and capacitive ripple due to C_{OUT} charge transfer. For applications requiring low voltage ripple, ceramic capacitors are recommended because of their low ESR which is typically in the range of 5mΩ. Therefore ΔV_{OUT} is mainly capacitive. For ceramic capacitors calculate the ΔV_{OUT} from:

$$\Delta V_{OUT} = \frac{\Delta I_L}{8 \times C_{OUT} \times f_s}$$

Where:

ΔI_L is from table 1 or 2

C_{OUT} is the value calculated above

f_s is nominal switching frequency (340kHz)

If tantalum or electrolytic capacitors are used then ΔV_{OUT} is essentially a function of ESR:

$$\Delta V_{OUT} = \Delta I_L \times ESR$$

The product or product being mentioned in this data sheet are no longer being manufactured and may not be ordered (OBS)

INPUT CAPACITOR C_{IN}

Select the input capacitor for voltage rating, RMS current rating and capacitance. The voltage rating should be at least 50% higher than the regulator's maximum input voltage. Calculate the capacitor's current rating from:

$$I_{CIN,RMS} = I_{OUT} \times \sqrt{D \times (1 - D)}$$

Where:

I_{OUT} is regulator's maximum current (2A)

D is duty cycle ($D=V_{OUT}/V_{IN}$)

Calculate the C_{IN} capacitance from:

$$C_{IN} = \frac{I_{OUT} \times V_{OUT} \times (V_{IN} - V_{OUT})}{f_s \times {V_{IN}}^2 \times \Delta V_{IN}}$$

Where:

ΔV_{IN} is the permissible input voltage ripple, nominally set at 1% of V_{IN}

OPTIONAL SCHOTTKY DIODE

An optional Schottky diode may be paralleled between the GND pin and SW pin to improve the regulator efficiency. Examples are shown in Table 3.

Part Number	Voltage/Current Rating	Vendor
B130	30V/1A	Diodes, Inc.
SK13	30V/1A	Diodes, Inc.
MBRS130	30V/1A	International Rectifier

Table 3: Optional Schottky Diode

EXTERNAL BOOTSTRAP DIODE

A low-cost diode, such as 1N4148, is recommended for higher efficiency when the input voltage is 5V or the output is 5V or 3.3V. Circuit configuration is shown in figures 16 and 17. The external bootstrap diode is also recommended where duty cycle (V_{OUT}/V_{IN}) is larger than 65%.

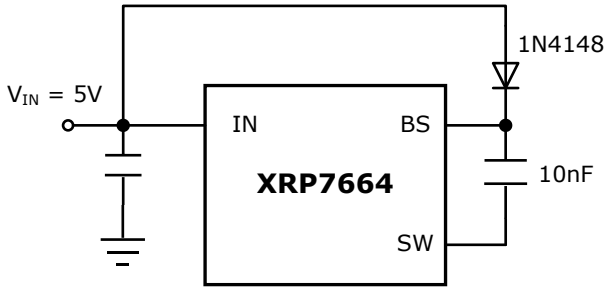

Fig. 16: Optional External Bootstrap Diode V_{IN}=5V Fixed

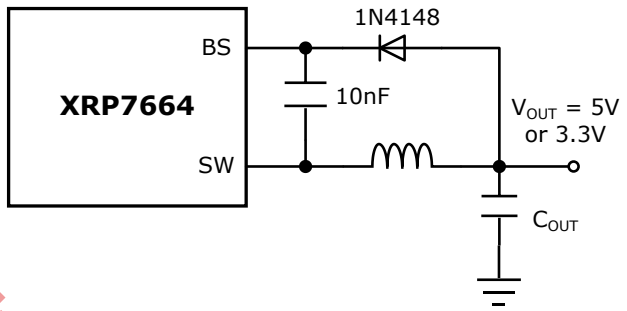

Fig. 17: Optional External Bootstrap Diode where V_{OUT} = 5V or 3.3V

LOOP COMPENSATION

XRP7664 utilizes current-mode control. This allows using a minimum of external components to compensate the regulator. In general only two components are needed: RC and CC. Proper compensation of the regulator (determining RC and CC) results in optimum transient response. In terms of power supply control theory, the goals of compensation are to choose RC and CC such that the regulator loop gain has a crossover frequency fc between 15kHz and 34kHz. The corresponding phase-margin should be between 45 degrees and 65 degrees. An important characteristic of current-mode buck regulator is its dominant pole. The frequency of the dominant pole is given by:

$$f_p = \frac{1}{2\pi \times C_{OUT} \times R_{load}}$$

where R_{load} is the output load resistance.

The uncompensated regulator has a constant gain up to its pole frequency, beyond which the gain decreases at -20dB/decade. The zero

The product (or products) mentioned in this data sheet are no longer being manufactured and may not be ordered (OBS)

arising from the output capacitor's ESR is inconsequential if ceramic C_{OUT} is used. This simplifies the compensation. The RC and CC, which are placed between the output of XRP7664's Error Amplifier and ground, constitute a zero. The frequency of this compensating zero is given by:

$$f_z = \frac{1}{2\pi \times RC \times CC}$$

For the typical application circuit, RC=5.6kΩ and CC=3.3nF provide a satisfactory compensation. Please contact EXAR if you need assistance with the compensation of your particular circuit.

TYPICAL APPLICATIONS

The product (or products) mentioned in this data sheet are no longer being manufactured and may not be ordered (OBS)

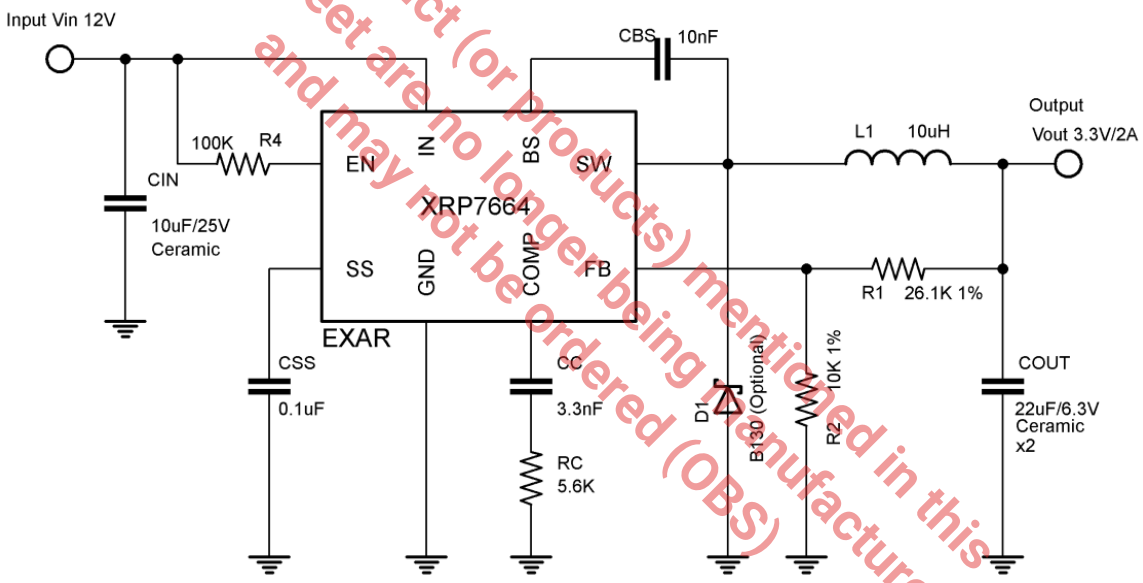

Fig. 18: XRP7664 Typical Application Diagram - 12V to 3.3V Conversion

PACKAGE SPECIFICATION

8-PIN SOIC

Unit: mm (inch)

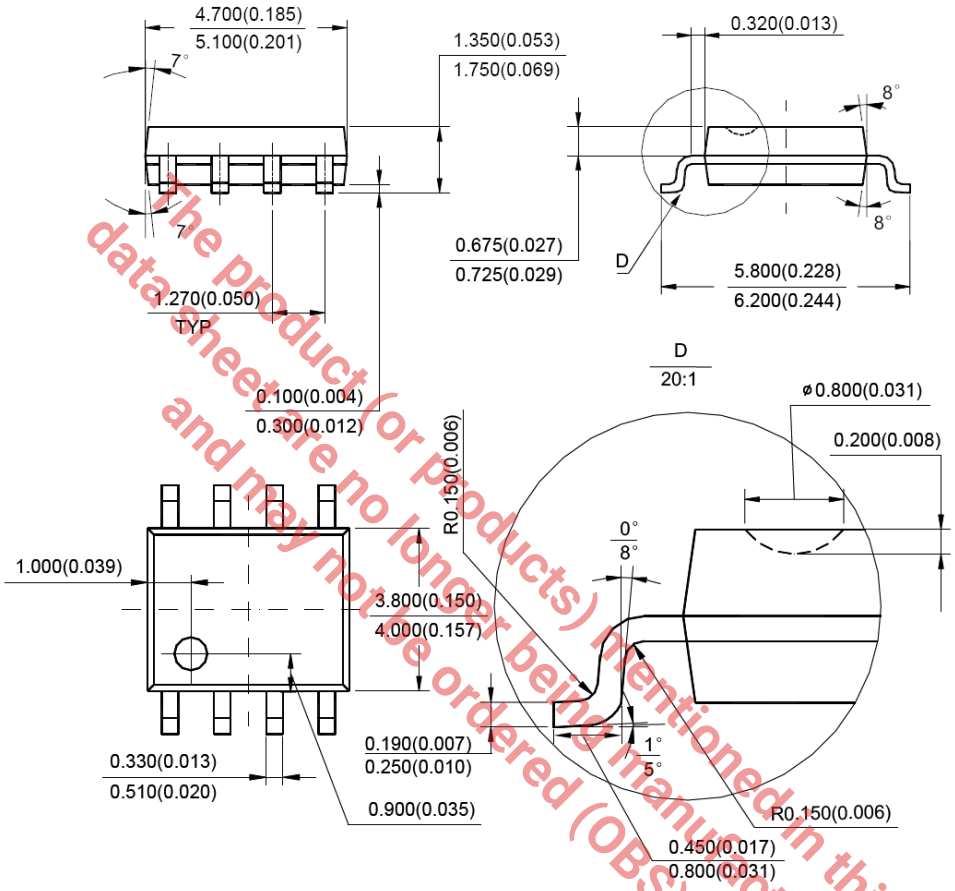

The product (or products) mentioned in this datasheet are no longer being manufactured and may not be ordered (OBS)

REVISION HISTORY

Revision	Date	Description
1.0.0	11/02/2010	Initial release of data sheet
1.1.0	12/17/2010	RC(R3) changed from 2.2kΩ to 5.6kΩ - Updated schematics Added the protection features to theory of operation Added figures 16 and 17
1.2.0	10/13/2011	Added MSL level information
2.0.0	10/22/2012	Reformat of datasheet Changed min operating input voltage from 4.75V to 4.5V Updated Electrical Specifications parameter (quiescent current, feedback voltage, high and low side switch on-resistance, oscillator frequency, EN shutdown threshold voltage and hysteresis, EN lockout threshold voltage and hysteresis, UVLO threshold and hysteresis, soft-start time) Updated figure 2: XRP7664 block diagram Updated Pin Description, EN pin description Updated all Typical Performance Characteristics curves
2.0.1	3/29/2013	Updated Enable pin description Deleted Electrical Specification parameters (shutdown supply current, EN shutdown threshold voltage and hysteresis, EN lockout threshold voltage and hysteresis) Added Electrical Specification parameters (EN enable threshold voltage and hysteresis) Added "ENABLE FUNCTION" to the theory of operation section.

The product (or products) mentioned in this data sheet are no longer being manufactured and may not be ordered (OBS)

FOR FURTHER ASSISTANCE

Email: customersupport@exar.com

powertechsupport@exar.com

Exar Technical Documentation: http://www.exar.com/TechDoc/default.aspx?

EXAR CORPORATION

HEADQUARTERS AND SALES OFFICES

48720 Kato Road

Fremont, CA 94538 – USA

Tel.: +1 (510) 668-7000

Fax: +1 (510) 668-7030

www.exar.com

NOTICE

EXAR Corporation reserves the right to make changes to the products contained in this publication in order to improve design, performance or reliability. EXAR Corporation assumes no responsibility for the use of any circuits described herein, conveys no license under any patent or other right, and makes no representation that the circuits are free of patent infringement. Charts and schedules contained here in are only for illustration purposes and may vary depending upon a user's specific application. While the information in this publication has been carefully checked; no responsibility, however, is assumed for inaccuracies.

EXAR Corporation does not recommend the use of any of its products in life support applications where the failure or malfunction of the product can reasonably be expected to cause failure of the life support system or to significantly affect its safety or effectiveness. Products are not authorized for use in such applications unless EXAR Corporation receives, in writing, assurances to its satisfaction that: (a) the risk of injury or damage has been minimized; (b) the user assumes all such risks; (c) potential liability of EXAR Corporation is adequately protected under the circumstances.

Reproduction, in part or whole, without the prior written consent of EXAR Corporation is prohibited.