GENERAL DESCRIPTION

The XRA1403 is an 16-bit GPIO expander with an SPI interface. After power-up, the XRA1403 has internal 100K ohm pull-up resistors on each I/O pin that can be individually enabled.

In addition, the GPIOs on the XRA1403 can individually be controlled and configured. As outputs, the GPIOs can be outputs that are high, low or in three-state mode. The three-state mode feature is useful for applications where the power is removed from the remote devices, but they may still be connected to the GPIO expander.

As inputs, the internal pull-up resistors can be enabled or disabled and the input polarity can be inverted. The interrupt can be programmed for different behaviors. The interrupts can be programmed to generate an interrupt on the rising edge, falling edge or on both edges. The interrupt can be cleared if the input changes back to its original state or by reading the current state of the inputs.

The XRA1403 is available in 24-pin QFN and 24-pin TSSOP packages.

The Product(s) mentioned in this data sheet are no longer being manufactured and may not be ordered (OBS)

FEATURES

- 1.65V to 3.6V operating voltage
- 16 General Purpose I/Os (GPIOs)
- 5V tolerant inputs
- Maximum stand-by current of 1uA at +1.8V
- SPI bus interface
  - SPI Clock Frequency up to 26MHz
- Individually programmable inputs
  - Internal pull-up resistors
  - Polarity inversion
  - Individual interrupt enable
  - Rising edge and/or Falling edge interrupt
  - Input filter
- Individually programmable outputs
  - Output Level Control
  - Output Three-State Control
- Open-drain active low interrupt output
- Active-low reset input
- 3kV HBM ESD protection per JESD22-A114F
- 200mA latch-up performance per JESD78B

APPLICATIONS

- Personal Digital Assistants (PDA)
- Cellular Phones/Data Devices
- Battery-Operated Devices
- Global Positioning System (GPS)
- Bluetooth

FIGURE 1. XRA1403 BLOCK DIAGRAM

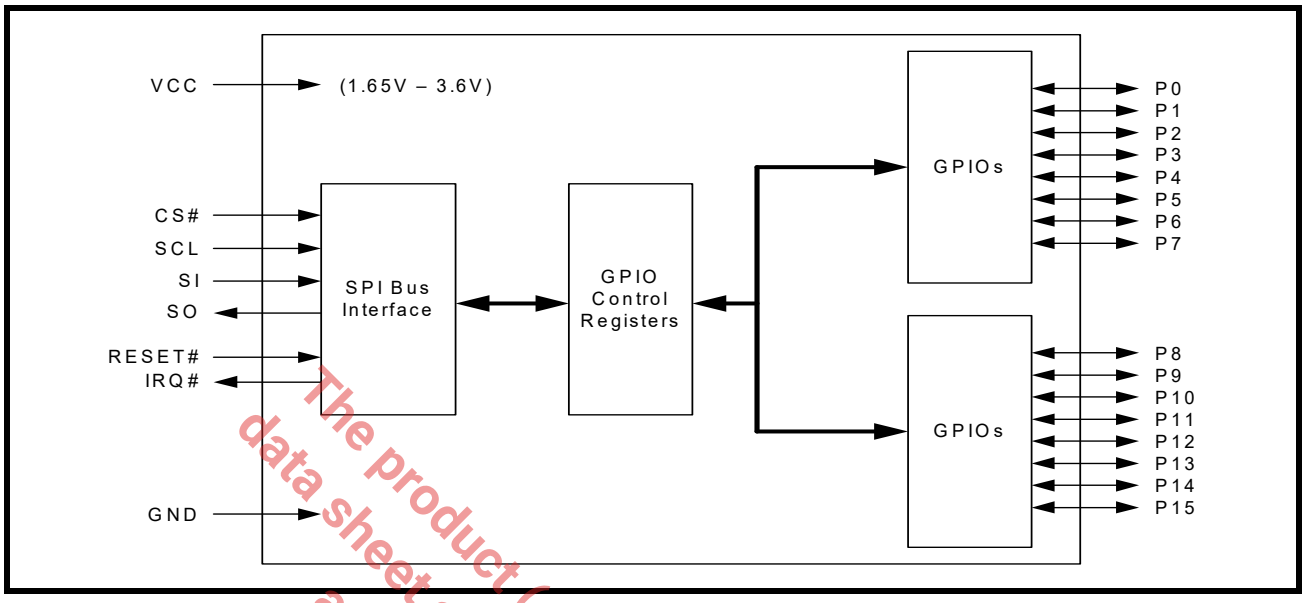

The product (or products) mentioned in this data sheet are no longer being manufactured and may not be ordered. (OBS)

ORDERING INFORMATION

PART NUMBER	NUMBER OF GPIOS	OPERATING TEMPERATURE RANGE	PACKAGE	PACKAGE METHOD	LEAD FREE
XRA1403IL24-F	16	-40°C to +85°C	QFN-24	Tray	Yes
XRA1403IL24TR-F	16	-40°C to +85°C	QFN-24	Tape and Reel	Yes
XRA1403IG24TR-F	16	-40°C to +85°C	TSSOP-24	Tape and Reel	Yes
XRA1403IL24-0B-EB	XRA1403 24-pin QFN Evaluation Board				
XRA1403IG24-0B-EB	XRA1403 24-pin TSSOP Evaluation Board				

NOTE: *For more information about part numbers, as well as the most up-to-date ordering information and additional information on environment rating, go to www.maxlinear.com/XRA1403.*

FIGURE 2. PIN OUT ASSIGNMENTS

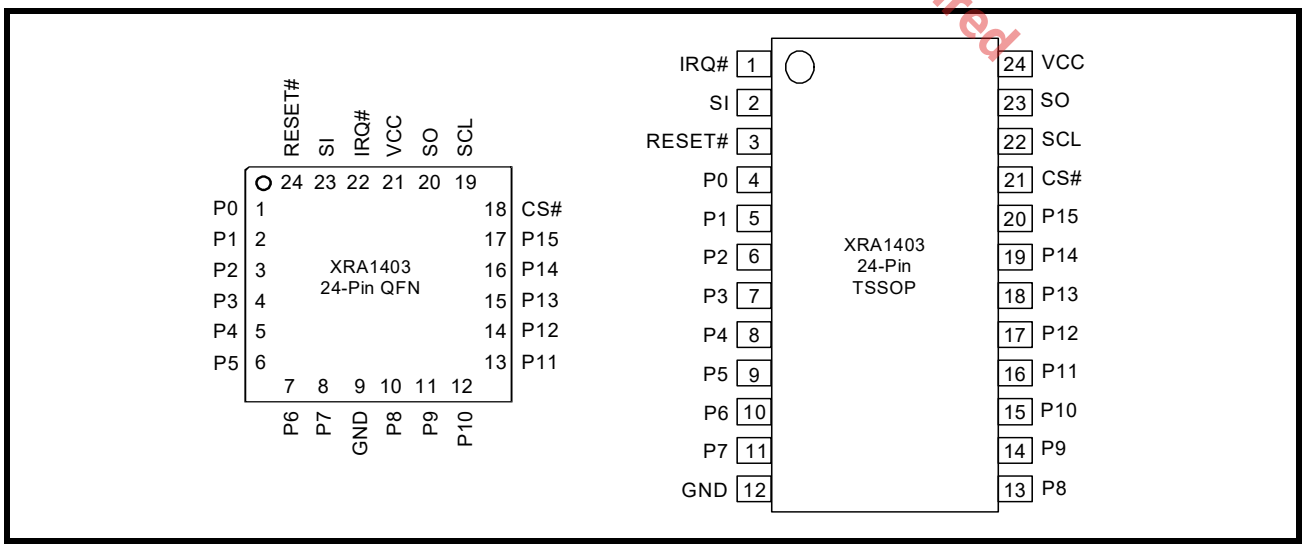

PIN DESCRIPTIONS

Pin Description

NAME	QFN-24 PIN#	TSSOP-24 PIN#	TYPE	DESCRIPTION
SPI INTERFACE				
SO	20	23	O	SPI serial data output.
SCL	19	22	I	SPI bus serial input clock.
IRQ#	22	1	OD	Interrupt output (open-drain, active LOW).
CS#	18	21	I	SPI bus chip select.
SI	23	2	I	SPI serial data input.
RESET#	24	3	I	Reset (active LOW) - A longer than 40 ns LOW pulse on this pin will reset the internal registers and all GPIOs will be configured as inputs.
GPIOs				
P0	1	4	I/O	General purpose I/Os P0-P7. All GPIOs are configured as inputs upon power-up or after a reset.
P1	2	5	I/O	
P2	3	6	I/O	
P3	4	7	I/O	
P4	5	8	I/O	
P5	6	9	I/O	
P6	7	10	I/O	
P7	8	11	I/O	
P8	10	13	I/O	General purpose I/O P8-P15. All GPIOs are configured as inputs upon power-up or after a reset.
P9	11	14	I/O	
P10	12	15	I/O	
P11	13	16	I/O	
P12	14	17	I/O	
P13	15	18	I/O	
P14	16	19	I/O	
P15	17	20	I/O	
ANCILLARY SIGNALS				
VCC	21	24	Pwr	1.65V to 3.6V VCC supply voltage.
GND	9	12	Pwr	Power supply common, ground.
GND	Center Pad	-	Pwr	The exposed pad at the bottom surface of the package is designed for thermal performance. Use of a center pad on the PCB is strongly recommended for thermal conductivity as well as to provide mechanical stability of the package on the PCB. The center pad is recommended to be solder masked defined with opening size less than or equal to the exposed thermal pad on the package bottom to prevent solder bridging to the outer leads of the device. Thermal vias must be connected to GND plane as the thermal pad of package is at GND potential.

Pin type: I=Input, O=Output, I/O= Input/output, OD=Output Open Drain.

The product(or products) mentioned in this data sheet are no longer being manufactured and may not be ordered (OBS)

1.0 FUNCTIONAL DESCRIPTION

1.1 SPI bus Interface

The SPI interface consists of four lines: serial clock (SCL), chip select (CS#), slave output (SO) and slave input (SI). The serial clock, slave output and slave input can be as fast as 26 MHz. To access the device in the SPI mode, the CS# signal is asserted by the SPI master, then the SPI master starts toggling the SCL signal with the appropriate transaction information. The first bit sent by the SPI master includes whether it is a read or write transaction and the register being accessed. See Table 1 below.

TABLE 1: SPI COMMAND BYTE FORMAT

BIT	FUNCTION
7	Read/Write# Logic 1 = Read Logic 0 = Write
6:1	Command Byte
0	Reserved

The product (or products) mentioned in this data sheet are no longer being manufactured and may not be ordered (OBS)

FIGURE 3. SPI WRITE

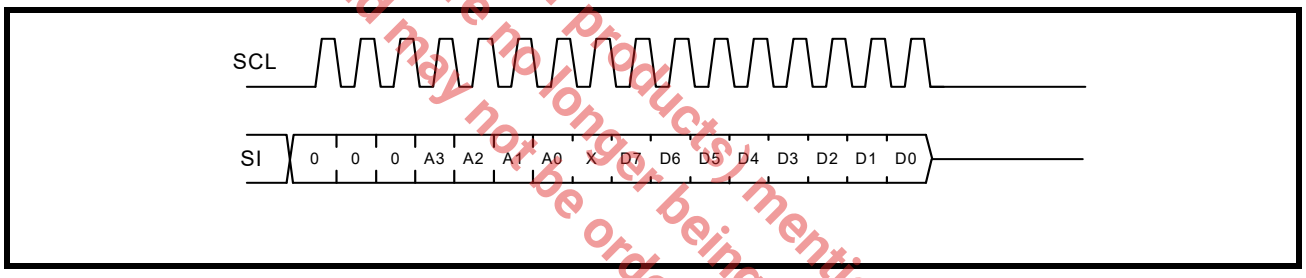

FIGURE 4. SPI READ

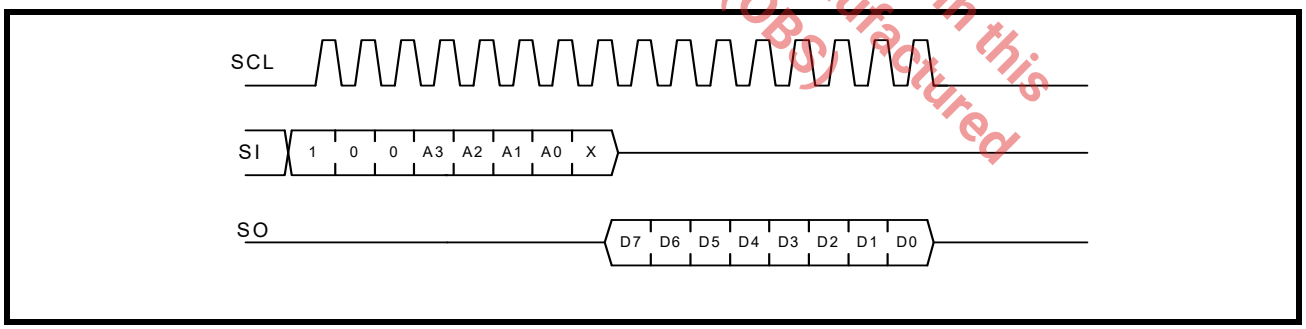

After the last read or write transaction, the SPI master will set the SCL signal back to its idle state (LOW).

1.1.1 SPI Command Byte

An SPI command byte is sent by the SPI master following the slave address. The command byte indicates the address offset of the register that will be accessed. Table 2 below lists the command bytes for each register.

TABLE 2: COMMAND BYTE (REGISTER ADDRESS)

COMMAND BYTE	REGISTER NAME DESCRIPTION	READ/WRITE	DEFAULT VALUES
0x00	GSR1 - GPIO State for P0-P7	Read-Only	0xXX
0x01	GSR2 - GPIO State for P8-P15	Read-Only	0xXX
0x02	OCR1 - Output Control for P0-P7	Read/Write	0xFF
0x03	OCR2 - Output Control for P8-P15	Read/Write	0xFF
0x04	PIR1 - Input Polarity Inversion for P0-P7	Read/Write	0x00
0x05	PIR2 - Input Polarity Inversion for P8-P15	Read/Write	0x00
0x06	GCR1 - GPIO Configuration for P0-P7	Read/Write	0xFF
0x07	GCR2 - GPIO Configuration for P8-P15	Read/Write	0xFF
0x08	PUR1 - Input Internal Pull-up Resistor Enable/Disable for P0-P7	Read/Write	0x00
0x09	PUR2 - Input Internal Pull-up Resistor Enable/Disable for P8-P15	Read/Write	0x00
0x0A	IER1 - Input Interrupt Enable for P0-P7	Read/Write	0x00
0x0B	IER2 - Input Interrupt Enable for P8-P15	Read/Write	0x00
0x0C	TSCR1 - Output Three-State Control for P0-P7	Read/Write	0x00
0x0D	TSCR2 - Output Three-State Control for P8-P15	Read/Write	0x00
0x0E	ISR1 - Input Interrupt Status for P0-P7	Read	0x00
0x0F	ISR2 - Input Interrupt Status for P8-P15	Read	0x00
0x10	REIR1 - Input Rising Edge Interrupt Enable for P0-P7	Read/Write	0x00
0x11	REIR2 - Input Rising Edge Interrupt Enable for P8-P15	Read/Write	0x00
0x12	FEIR1 - Input Falling Edge Interrupt Enable for P0-P7	Read/Write	0x00
0x13	FEIR2 - Input Falling Edge Interrupt Enable for P8-P15	Read/Write	0x00
0x14	IFR1 - Input Filter Enable/Disable for P0-P7	Read/Write	0xFF
0x15	IFR2 - Input Filter Enable/Disable for P8-P15	Read/Write	0xFF

The Product(s) mentioned in this data sheet are no longer being manufactured and may not be ordered (OBS)

1.2 Interrupts

The table below summarizes the interrupt behavior of the different register settings for the XRA1403.

TABLE 3: INTERRUPT GENERATION AND CLEARING

GCR BIT	IER BIT	REIR BIT	FEIR BIT	IFR BIT	INTERRUPT GENERATED BY:	INTERRUPT CLEARED BY:
1	0	X	X	X	No interrupts enabled (default)	N/A
1	1	0	0	0	A rising or falling edge on the input	Reading the GSR register or if the input changes back to its previous state (state of input during last read to GSR)
				1	A rising or falling edge on the input and remains in the new state for more than 1075ns	
1	1	1	0	0	A rising edge on the input	Reading the GSR register
				1	A rising edge on the input and remains high for more than 1075ns	
1	1	0	1	0	A falling edge on the input	Reading the GSR register
				1	A falling edge on the input and remains low for more than 1075ns	
1	1	1	1	0	A rising or falling edge on the input	Reading the GSR register
				1	A rising or falling edge on the input and remains in the new state for more than 1075ns	
0	x	x	x	x	No interrupts in output mode	N/A

The product (or products) mentioned in this data sheet are no longer being manufactured and may not be ordered (OBS)

2.0 REGISTER DESCRIPTION

2.1 GPIO State Register 1 (GSR1) - Read-Only

The status of P7 - P0 can be read via this register. A read will show the current state of these pins (or the inverted state of these pins if enabled via the PIR Register). Reading this register will clear an input interrupt (see Table 3 for complete details). Reading this register will also return the last value written to the OCR register for any pins that are configured as outputs (ie. this is not the same as the state of the actual output pin since the output pin can be in three-state mode). A write to this register has no effect. The MSB of this register corresponds with P7 and the LSB of this register corresponds with P0.

2.2 GPIO State Register 2 (GSR2) - Read-Only

The status of P15 - P8 can be read via this register. A read will show the current state of these pins (or the inverted state of these pins if enabled via the PIR Register). Reading this register will clear an input interrupt (see Table 3 for complete details). Reading this register will also return the last value written to the OCR register for any pins that are configured as outputs (ie. this is not the same as the state of the actual output pin since the output pin can be in three-state mode). A write to this register has no effect. The MSB of this register corresponds with P15 and the LSB of this register corresponds with P8.

The product (or products) mentioned in this datasheet are no longer being manufactured and may not be ordered (OBS)

2.3 Output Control Register 1 (OCR1) - Read/Write

When P7 - P0 are defined as outputs, they can be controlled by writing to this register. Reading this register will return the last value written to it, however, this value may not be the actual state of the output pin since these pins can be in three-state mode. The MSB of this register corresponds with P7 and the LSB of this register corresponds with P0.

2.4 Output Control Register 2 (OCR2) - Read/Write

When P15 - P8 are defined as outputs, they can be controlled by writing to this register. Reading this register will return the last value written to it, however, this value may not be the actual state of the output pin since these pins can be in three-state mode. The MSB of this register corresponds with P15 and the LSB of this register corresponds with P8.

2.5 Input Polarity Inversion Register 1 (PIR1) - Read/Write

When P7 - P0 are defined as inputs, this register inverts the polarity of the input value read from the Input Port Register. If the corresponding bit in this register is set to '1', the value of this bit in the GSR Register will be the inverted value of the input pin. If the corresponding bit in this register is set to '0', the value of this bit in the GSR Register will be the actual value of the input pin. The MSB of this register corresponds with P7 and the LSB of this register corresponds with P0.

2.6 Input Polarity Inversion Register 2 (PIR2) - Read/Write

When P15 - P8 are defined as inputs, this register inverts the polarity of the input value read from the Input Port Register. If the corresponding bit in this register is set to '1', the value of this bit in the GSR Register will be the inverted value of the input pin. If the corresponding bit in this register is set to '0', the value of this bit in the GSR Register will be the actual value of the input pin. The MSB of this register corresponds with P15 and the LSB of this register corresponds with P8.

2.7 GPIO Configuration Register 1 (GCR1) - Read/Write

This register configures the GPIOs as inputs or outputs. Upon power-up or after a reset, the GPIOs are configured as inputs by default. Setting these bits to '0' will enable the GPIOs as outputs. Setting these bits to '1' will enable the GPIOs as inputs. The MSB of this register corresponds with P7 and the LSB of this register corresponds with P0.

2.8 GPIO Configuration Register 2 (GCR2) - Read/Write

This register configures the GPIOs as inputs or outputs. Upon power-up or after a reset, the GPIOs are configured as inputs by default. Setting these bits to '0' will enable the GPIOs as outputs. Setting these bits to '1' will enable the GPIOs as inputs. The MSB of this register corresponds with P15 and the LSB of this register corresponds with P8.

2.9 Input Internal Pull-up Enable/Disable Register 1 (PUR1) - Read/Write

This register enables/disables the internal pull-up resistors for an input. Upon power-up or after a reset, the internal pull-up resistors are disabled by default. Writing a '1' to these bits will enable the internal pull-up resistors. Writing a '0' to these bits will disable the internal pull-up resistors. The MSB of this register corresponds with P7 and the LSB of this register corresponds with P0.

2.10 Input Internal Pull-up Enable/Disable Register 2 (PUR2) - Read/Write

This register enables/disables the internal pull-up resistors for an input. Upon power-up or after a reset, the internal pull-up resistors are disabled by default. Writing a '1' to these bits will enable the internal pull-up resistors. Writing a '0' to these bits will disable the internal pull-up resistors. The MSB of this register corresponds with P15 and the LSB of this register corresponds with P8.

2.11 Input Interrupt Enable Register 1 (IER1) - Read/Write

This register enables/disables the interrupts for an input. Upon power-up or after a reset, the interrupts are disabled by default. Writing a '1' to these bits will enable the interrupt for the corresponding input pins. See Table 3 for complete details of the interrupt behavior for various register settings. No interrupts are generated for outputs when GCR bit is 0. The MSB of this register corresponds with P7 and the LSB of this register corresponds with P0.

2.12 Input Interrupt Enable Register 2 (IER2) - Read/Write

This register enables/disables the interrupts for an input. Upon power-up or after a reset, the interrupts are disabled by default. Writing a '1' to these bits will enable the interrupt for the corresponding input pins. See Table 3 for complete details of the interrupt behavior for various register settings. No interrupts are generated for outputs when GCR bit is 0. The MSB of this register corresponds with P15 and the LSB of this register corresponds with P8.

2.13 Output Three-State Control Register 1 (TSCR1) - Read/Write

This register can enable/disable the three-state mode of an output. Writing a '1' to these bits will enable the three-state mode for the corresponding output pins. The MSB of this register corresponds with P7 and the LSB of this register corresponds with P0.

2.14 Output Three-State Control Register 2 (TSCR2) - Read/Write

This register can enable/disable the three-state mode of an output. Writing a '1' to these bits will enable the three-state mode for the corresponding output pins. The MSB of this register corresponds with P15 and the LSB of this register corresponds with P8.

2.15 Input Interrupt Status Register 1 (ISR1) - Read-Only

This register reports the input pins that have generated an interrupt. See Table 3 for complete details of the interrupt behavior for various register settings. The MSB of this register corresponds with P7 and the LSB of this register corresponds with P0.

2.16 Input Interrupt Status Register 2 (ISR2) - Read-Only

This register reports the input pins that have generated an interrupt. See Table 3 for complete details of the interrupt behavior for various register settings. The MSB of this register corresponds with P15 and the LSB of this register corresponds with P8.

The Product (or Products) mentioned in this data sheet are no longer being manufactured and may not be ordered (OBS)

2.17 Input Rising Edge Interrupt Enable Register 1 (REIR1) - Read/Write

Writing a '1' to these bits will enable the corresponding input to generate an interrupt on the rising edge. See Table 3 for complete details of the interrupt behavior for various register settings. The MSB of this register corresponds with P7 and the LSB of this register corresponds with P0.

2.18 Input Rising Edge Interrupt Enable Register 2 (REIR2) - Read/Write

Writing a '1' to these bits will enable the corresponding input to generate an interrupt on the rising edge. See Table 3 for complete details of the interrupt behavior for various register settings. The MSB of this register corresponds with P15 and the LSB of this register corresponds with P8.

2.19 Input Falling Edge Interrupt Enable Register 1 (FEIR1) - Read/Write

Writing a '1' to these bits will enable the corresponding input to generate an interrupt on the falling edge. Writing a '1' to these bits will make that input generate an interrupt on the rising edge only. See Table 3 for complete details of the interrupt behavior for various register settings. The MSB of this register corresponds with P7 and the LSB of this register corresponds with P0.

2.20 Input Falling Edge Interrupt Enable Register 2 (FEIR2) - Read/Write

Writing a '1' to these bits will enable the corresponding input to generate an interrupt on the falling edge. Writing a '1' to these bits will make that input generate an interrupt on the rising edge only. See Table 3 for complete details of the interrupt behavior for various register settings. The MSB of this register corresponds with P15 and the LSB of this register corresponds with P8.

2.21 Input Filter Enable Register 1 (IFR1) - Read/Write

By default, the input filters are enabled (IFR = 0xFF). When the input filters are enabled, any pulse that is greater than 1075ns will generate an interrupt (if enabled). Pulses that are less than 225ns will be filtered and will not generate an interrupt. Pulses in between this range may or may not generate an interrupt. Writing a '0' to these bits will disable the input filter for the corresponding inputs. With the input filters disabled, any change on the inputs will generate an interrupt (if enabled). See Table 3 for complete details of the interrupt behavior for various register settings. The MSB of this register corresponds with P7 and the LSB of this register corresponds with P0.

2.22 Input Filter Enable Register 2 (IFR2) - Read/Write

By default, the input filters are enabled (IFR = 0xFF). When the input filters are enabled, any pulse that is greater than 1075ns will generate an interrupt (if enabled). Pulses that are less than 225ns will be filtered and will not generate an interrupt. Pulses in between this range may or may not generate an interrupt. Writing a '0' to these bits will disable the input filter for the corresponding inputs. With the input filters disabled, any change on the inputs will generate an interrupt (if enabled). See Table 3 for complete details of the interrupt behavior for various register settings. The MSB of this register corresponds with P15 and the LSB of this register corresponds with P8.

The product (or products) mentioned in this data sheet are no longer being manufactured and may not be ordered. (OBS)

ABSOLUTE MAXIMUM RATINGS

Power supply voltage	3.6 Volts
Supply current	160 mA
Ground current	200 mA
External current limit of each GPIO	25 mA
Total current limit for GPIO[15:8] and GPIO[7:0]	100 mA
Total current limit for GPIO[15:0]	200 mA
Total supply current sourced by all GPIOs	160 mA
Operating Temperature	-40° to +85°C
Storage Temperature	-65° to +150°C
Power Dissipation	200 mW

TYPICAL PACKAGE THERMAL RESISTANCE DATA (MARGIN OF ERROR: ± 15%)

Thermal Resistance (24-QFN)	theta-ja = 38°C/W, theta-jc = 26°C/W
Thermal Resistance (24-TSSOP)	theta-ja = 84°C/W, theta-jc = 16°C/W

The product (or products) mentioned in this data sheet are no longer being manufactured and may not be ordered (OBS)

ELECTRICAL CHARACTERISTICS

DC ELECTRICAL CHARACTERISTICS

UNLESS OTHERWISE NOTED: TA = -40° TO +85°C, VCC IS 1.65V TO 3.6V

SYMBOL	PARAMETER	LIMITS 1.8V ± 10% MIN	LIMITS 1.8V ± 10% MAX	LIMITS 2.5V ± 10% MIN	LIMITS 2.5V ± 10% MAX	LIMITS 3.3V ± 10% MIN	LIMITS 3.3V ± 10% MAX	UNITS	CONDITIONS
V_{IL}	Input Low Voltage	-0.3	0.2	-0.3	0.5	-0.3	0.8	V	Note 1
V_{IH}	Input High Voltage	1.4	5.5	1.8	5.5	2.0	5.5	V	Note 1
V_{OL}	Output Low Voltage		0.4		0.4		0.4	V V V	I_{OL} = 6 mA I_{OL} = 4 mA I_{OL} = 1.5 mA Note 2 & Note 4
V_{OL}	Output Low Voltage		0.5		0.5		0.5	V	I_{OL} = 8 mA Note 3
V_{OH}	Output High Voltage	1.4		1.8		2.0		V V V	I_{OL} = -4 mA I_{OL} = -2 mA I_{OL} = -0.2 mA Note 2
V_{OH}	Output High Voltage	1.2		1.8		2.6		V V V	I_{OH} = -8 mA I_{OH} = -8 mA I_{OH} = -8 mA Note 3
I_{IL}	Input Low Leakage Current		±10		±10		±10	uA	
I_{IH}	Input High Leakage Current		±10		±10		±10	uA	
C_{IN}	Input Pin Capacitance		5		5		5	pF	
I_{CC}	Power Supply Current		0.5		1.0		2.0	mA	Test 1
I_{CC}	Power Supply Current		0.6		1.2		2.4	mA	Test 2
I_{CCS}	Standby Current		1		2		5	uA	Test 3
R_{GPIO}	GPIO pull-up resistance	60	140	60	140	60	140	kΩ	100kΩ ± 40%
$R_{RESET\#}$	Reset# pull-up resistance	35	85	35	85	35	85	kΩ	60kΩ ± 40%

The product (or products) mentioned in this data sheet are no longer being manufactured and may not be ordered (OBS)

NOTES:

1. *For SPI input signals (SI, SCL) & GPIOs, A0, A1 and A2 signals;*
2. *For SPI output signal SO;*
3. *For GPIOs;*
4. *For IRQ# signal;*

Test 1: SCL frequency is 10 MHz with internal pull-ups disabled. All GPIOs are configured as inputs. All inputs are steady at VCC or GND. Outputs are floating or in the tri-state mode.

Test 2: SCL frequency is 10 MHz with internal pull-ups enabled. All GPIOs are configured as inputs. All inputs are steady at VCC or GND. Outputs are floating or in the tri-state mode.

Test 3: All inputs are steady at VCC or GND to minimize standby current. If internal pull-up is enabled, input voltage level should be the same as VCC. SCL and SI are at GND. CS# is at VCC. All GPIOs are configured as inputs. Outputs are left floating or in tri-state mode.

AC ELECTRICAL CHARACTERISTICS - SPI-BUS TIMING SPECIFICATIONS

Unless otherwise noted: TA=-40° to +85°C, Vcc=1.65V - 3.6V

Symbol	Parameter	Limits 1.8V ± 10%			Limits 2.5V ± 10%			Limits 3.3V ± 10%			Unit	Conditions
		Min	Typ	Max	Min	Typ	Max	Min	Typ	Max		
f_{SCL}	Operating frequency			15			26			26	MHz	
T_{CSS}	CS# to SCL setup time	20			20			20			ns	
T_{CSH}	CS# to SCL hold time	20			20			20			ns	
T_{DO}	SCL fall to SO valid time			100			100			100	ns	C_L = 30 pF
T_{DS}	SI to SCL setup time	20			20			20			ns	
T_{DH}	SI to SCL hold time	20			20			20			ns	
T_{CP}	SCL period	66			38			38			ns	T_{CH} + T_{CL}
T_{CH}	SCL HIGH time	30			15			15			ns	
T_{CL}	SCL LOW time	30			15			15			ns	
T_{CSW}	CS# HIGH pulse width	30			30			30			ns	
T_{D9}	SPI output data valid time		10			10			10		ns	
T_{D13}	SPI input pin interrupt clear			200			200			200	ns	

The product (or products) mentioned in this data sheet are no longer being manufactured and may not be ordered (OBS)

FIGURE 5. SPI-BUS TIMING

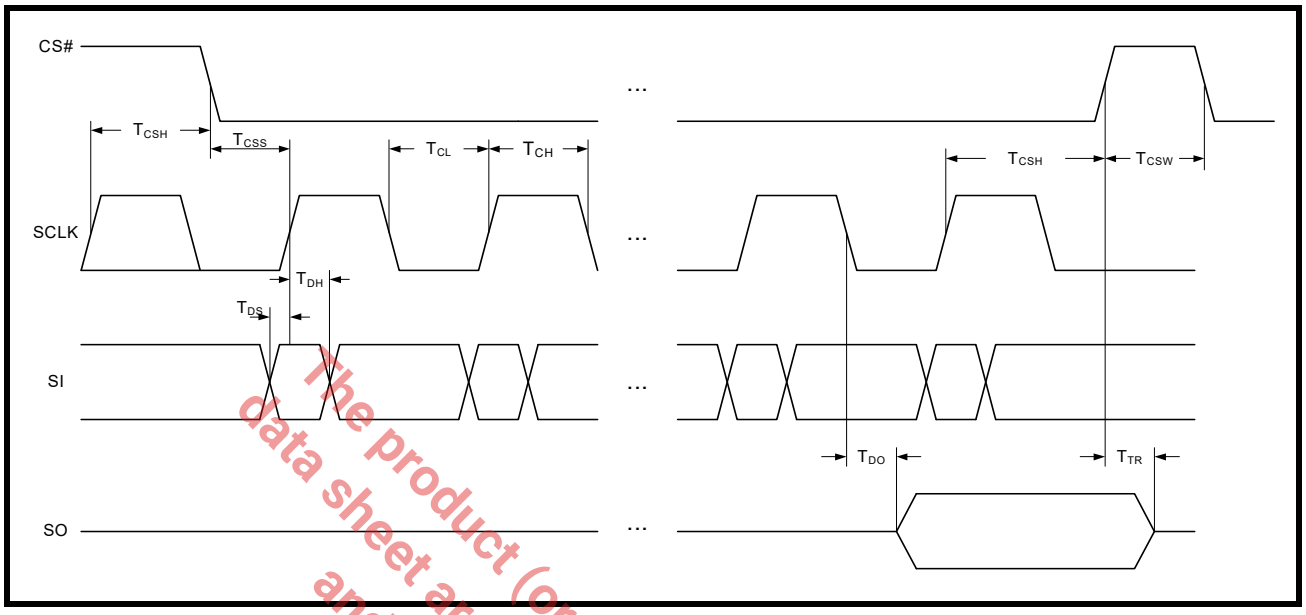

FIGURE 6. READ INPUT PORT TO CLEAR GPIO INT

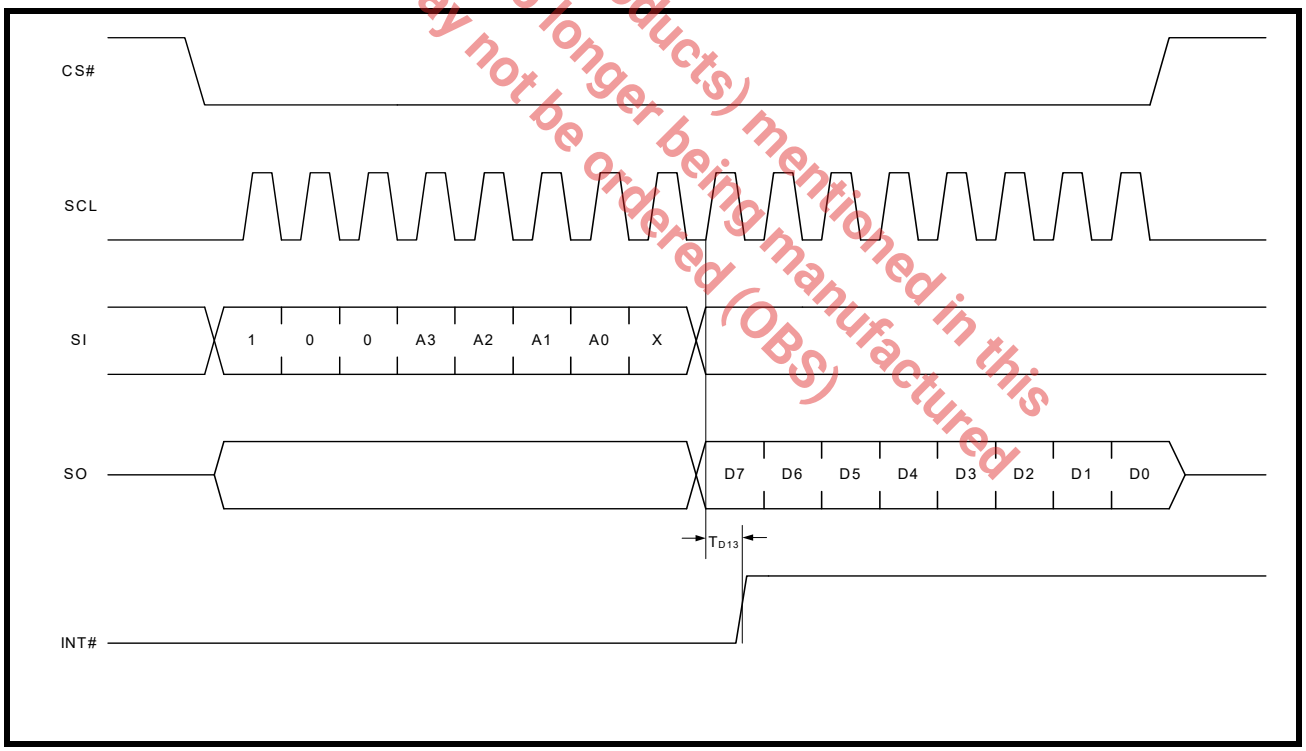

The product (or products) mentioned in this data sheet are no longer being manufactured and may not be ordered (OBS)

FIGURE 7. SPI WRITE OUT TO GPIO SWITCH

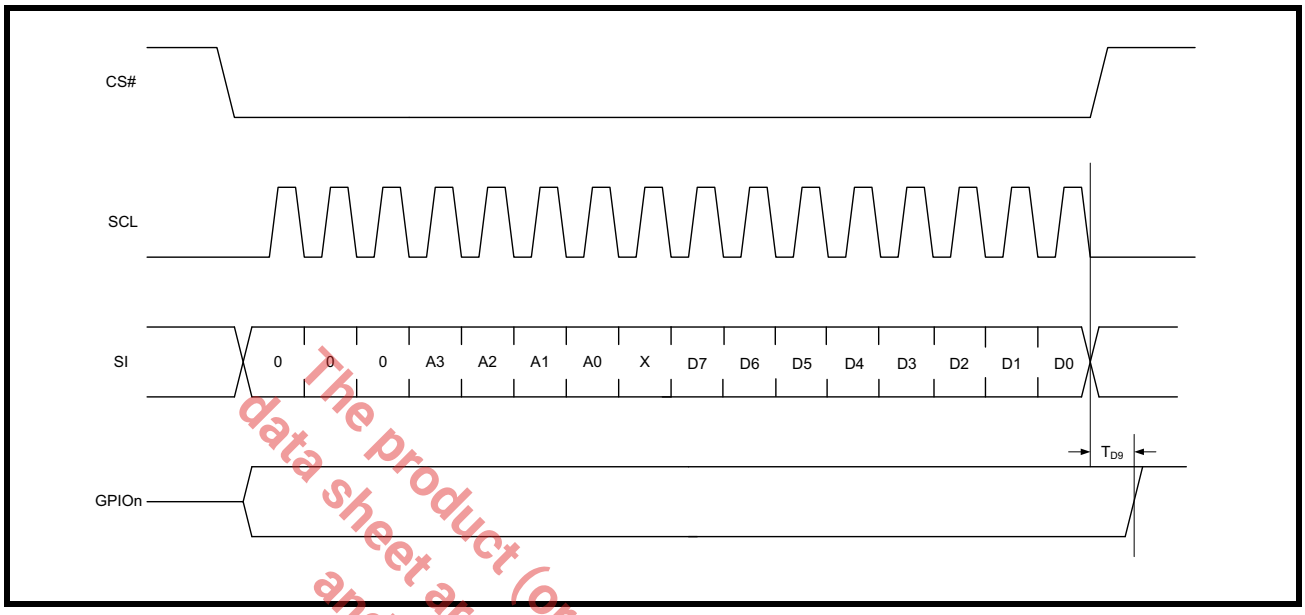

The product (or products) mentioned in this data sheet are no longer being manufactured and may not be ordered (OBS)

MECHANICAL DIMENSIONS (24 PIN QFN - 4 X 4 X 0.9 mm)

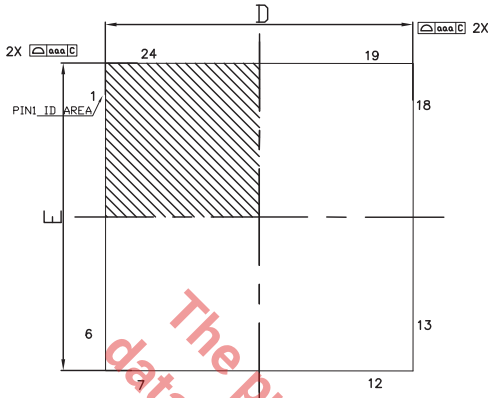

TOP VIEW

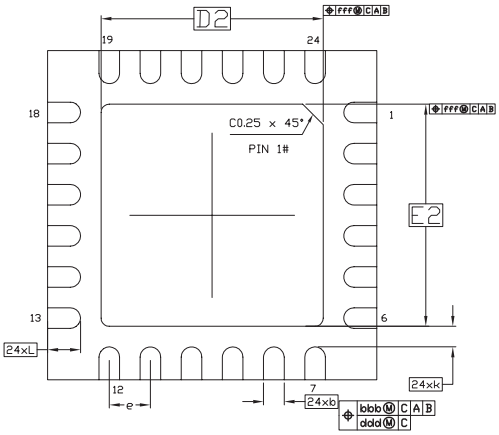

BOTTOM VIEW

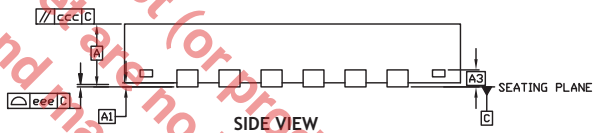

SIDE VIEW

DIM / SYMBOL	MIN	NOM	MAX
A	0.80	0.90	1.00
A1	0.00	0.02	0.05
A3	---	0.203Ref	---
b	0.18	0.25	0.30
D		4.00 BSC	
E		4.00 BSC	
e		0.50 BSC	
D2	2.20	2.40	2.60
E2	2.20	2.40	2.60
L	0.35	0.40	0.45
K	0.20	–	–
aaa		0.15	
bbb		0.10	
ccc		0.10	
ddd		0.05	
eee		0.08	
fff		0.10	
N		24	

TERMINAL DETAILS

- ALL DIMENSIONS ARE IN MILLIMETERS, ANGLES ARE IN DEGREES.
- DIMENSIONS AND TOLERANCE PER JEDEC MO-220.

Drawing No.: POD-00000142

Revision: A

Note: The control dimension is in millimeter.

The product (or product mentioned in this data sheet) are no longer being manufactured and may not be ordered (OBS)

RECOMMENDED LAND PATTERN AND STENCIL (24 PIN QFN - 4 X 4 X 0.9 mm)

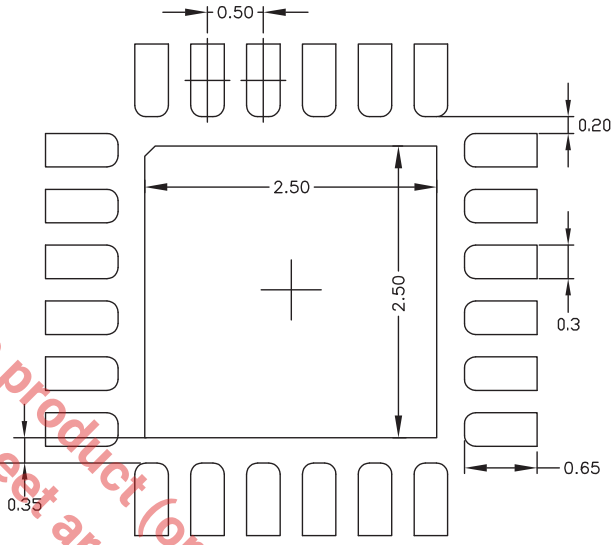

TYPICAL RECOMMENDED LAND PATTERN

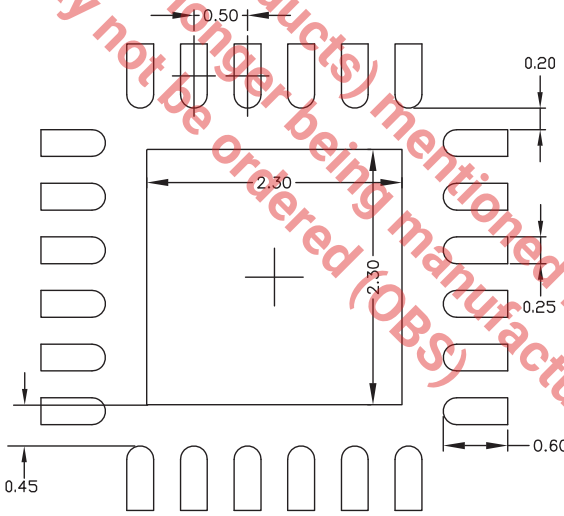

TYPICAL RECOMMENDED STENCIL

Drawing No.: POD-00000 142

Revision: A

Note: The control dimension is in millimeter.

The product (or products) mentioned in this data sheet are no longer being manufactured and may not be ordered (OBS)

MECHANICAL DIMENSIONS (24 PIN TSSOP - 4.4 mm)

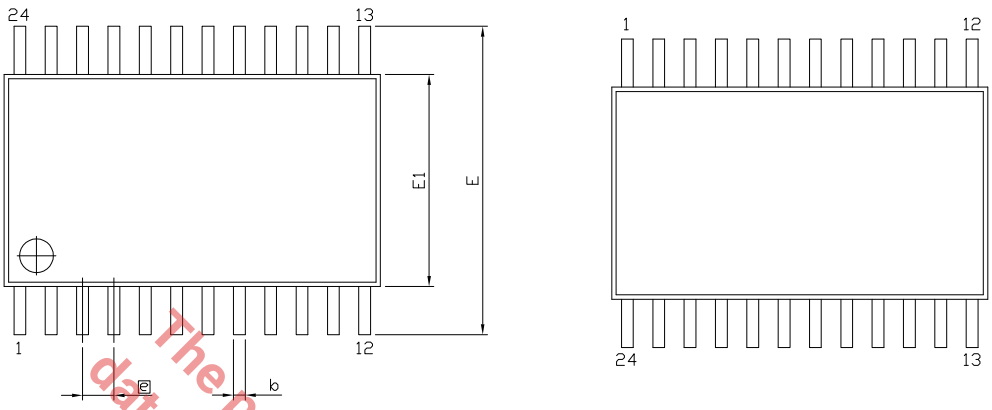

TOP VIEW

BOTTOM VIEW

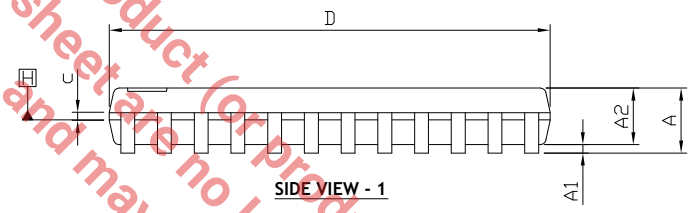

SIDE VIEW - 1

DIM / SYMBOL	MIN	NOM	MAX
A	–	–	1.20
A1	0.05	–	0.15
A2	0.80	1.00	1.05
b	0.19	–	0.30
D	7.70	7.80	7.90
E	6.40 BSC		
e	0.65 BSC		
E1	4.30	4.40	4.50
c	0.09	–	0.20
L	0.45	0.60	0.75
L1	1.0 REF		
θ	0	–	8
R	0.09	–	–
R1	0.09	–	–
N		24	

TERMINAL DETAILS

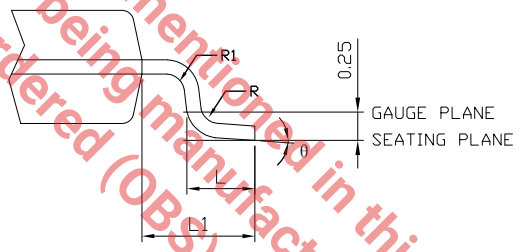

SIDE VIEW - 2

- ALL DIMENSIONS ARE IN MILLIMETERS, ANGLES ARE IN DEGREES.
- DIMENSIONS AND TOLERANCE PER JEDEC MO-153.

Drawing No.: POD-00000058

Revision: D

Note: The control dimension is in millimeter.

The product (or products) mentioned in this data sheet are no longer being manufactured and may not be ordered (OBS)

RECOMMENDED LAND PATTERN AND STENCIL (24 PIN TSSOP - 4.4 mm)

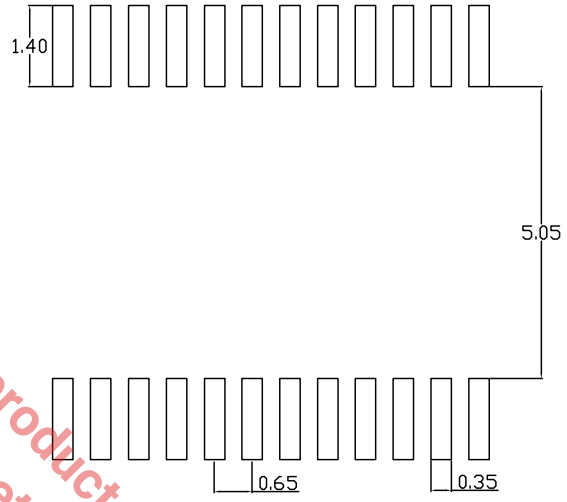

TYPICAL RECOMMENDED LAND PATTERN

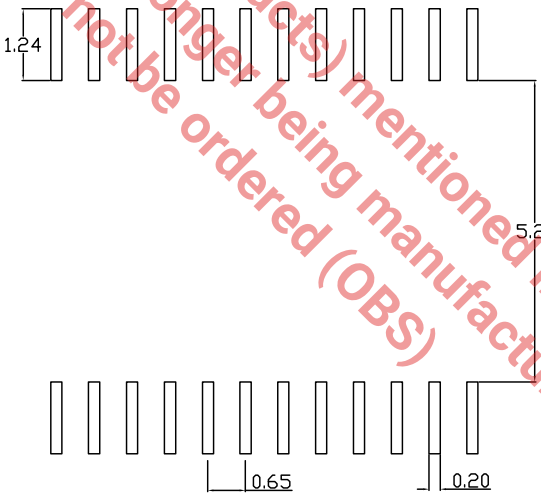

TYPICAL RECOMMENDED STENCIL

Drawing No.: POD-00000058

Revision: D

Note: The control dimension is in millimeter.

The product (or products) mentioned in this data sheet are no longer being manufactured and may not be ordered (OBS)

REVISION HISTORY

DATE	REVISION	DESCRIPTION
September 2011	1.0.0	Final datasheet.
August 2020	1.0.1	Update to MaxLinear logo. Update Ordering Information.
February 2, 2022	1.0.2	**Updated:** ■ "GPIO Configuration Register 1 (GCR1) - Read/Write" section. ■ "GPIO Configuration Register 2 (GCR2) - Read/Write" section. ■ "Input Internal Pull-Up Enable/Disable Register 1 (PUR1) - Read/Write" section. ■ "Input Internal Pull-Up Enable/Disable Register 2 (PUR2) - Read/Write" section. ■ "Input Interrupt Enable Register 1 (IER1) - Read/Write" section. ■ "Input Interrupt Enable Register 2 (IER2) - Read/Write" section. ■ "Mechanical Dimensions (24 Pin QFN)" figure. ■ "Recommended Land Pattern and Stencil (24 Pin QFN)" figure. ■ "Mechanical Dimensions (24 Pin TSSOP)" figure. ■ "Recommended Land Pattern and Stencil (24 Pin TSSOP)" figure. **Added:** ■ In the "AC Electrical Characteristics - SPI-Bus Timing Specifications" table, "T_{D9}" parameter and "TYP" columns. ■ "SPI Write out to GPIO Switch" figure.

The product (or products) mentioned in this data sheet are no longer being manufactured and may not be ordered (OBS)

Corporate Headquarters:
5966 La Place Court, Suite 100
Carlsbad, CA 92008
Tel.: +1 (760) 692-0711
Fax: +1 (760) 444-8598

www.maxlinear.com

The content of this document is furnished for informational use only, is subject to change without notice, and should not be construed as a commitment by MaxLinear, Inc. MaxLinear, Inc. assumes no responsibility or liability for any errors or inaccuracies that may appear in the informational content contained in this guide. Complying with all applicable copyright laws is the responsibility of the user. Without limiting the rights under copyright, no part of this document may be reproduced into, stored in, or introduced into a retrieval system, or transmitted in any form or by any means (electronic, mechanical, photocopying, recording, or otherwise), or for any purpose, without the express written permission of MaxLinear, Inc.

Maxlinear, Inc. does not recommend the use of any of its products in life support applications where the failure or malfunction of the product can reasonably be expected to cause failure of the life support system or to significantly affect its safety or effectiveness. Products are not authorized for use in such applications unless MaxLinear, Inc. receives, in writing, assurances to its satisfaction that: (a) the risk of injury or damage has been minimized; (b) the user assumes all such risks; (c) potential liability of MaxLinear, Inc. is adequately protected under the circumstances.

MaxLinear, Inc. may have patents, patent applications, trademarks, copyrights, or other intellectual property rights covering subject matter in this document. Except as expressly provided in any written license agreement from MaxLinear, Inc., the furnishing of this document does not give you any license to these patents, trademarks, copyrights, or other intellectual property.

MaxLinear, the MaxLinear logo, any MaxLinear trademarks (MxL, Full-Spectrum Capture, FSC, G.now, AirPHY, Puma, and AnyWAN), and the MaxLinear logo on the products sold are all property of MaxLinear, Inc. or one of MaxLinear's subsidiaries in the U.S.A. and other countries. All rights reserved. Other company trademarks and product names appearing herein are the property of their respective owners.

© 2022 MaxLinear, Inc. All rights reserved.