1.5A 18V 1.4MHz Non Synchronous Step-Down Regulator

November 2019 Rev. 1.2.1

GENERAL DESCRIPTION

The XRP7659 is a current-mode PWM step-down (buck) voltage regulator capable of delivering an output current up to 1.5Amps. A wide 4.5V to 18V input voltage range allows for single supply operation from industry standard 5V, 9.6V and 12V power rails.

With a 1.4MHz constant operating frequency, integrated high-side MOSFET and loop compensation, the XRP7659 reduces the overall component count and solution footprint. Current-mode control provides fast transient response and cycle-by-cycle current limit. An integrated soft-start prevents inrush current at turn-on, and in shutdown mode the supply current drops to 0.1µA.

Built-in output over voltage (open load), over temperature, cycle-by-cycle over-current and under voltage lockout (UVLO) protection insure safe operation under abnormal operating conditions.

The XRP7659 is a pin and function compatible (V_{IN}<18V) device to Monolithic Power Systems MP2359.

The XRP7659 is offered in a RoHS compliant, "green"/halogen free 6-pin SOT-23 package.

APPLICATIONS

- **Distributed Power Architectures**
- **Point of Load Converters**
- **Audio-Video Equipment**
- **Medical & Industrial Equipment**

FEATURES

- **1.5A Continuous Output Current**
- **4.5V to 18V Wide Input Voltage**
- **PWM Current-Mode Control**
  - 1.4MHz Constant Operation
  - Up to 92% Efficiency
- **Adjustable Output Voltage**
  - 0.81V to 15V Range
  - ±3% Accuracy
- **Enable Function and Soft Start**
- **Built-in Thermal, Over-Current, UVLO and Output Over-Voltage Protection**
- **Pin/Function Compatible to MP2359**
- **RoHS Compliant, "Green"/Halogen Free 6-Pin SOT-23 Package**

The product (or product(s) mentioned in this data sheet are no longer being manufactured and may not be ordered (OBS)

TYPICAL APPLICATION DIAGRAM

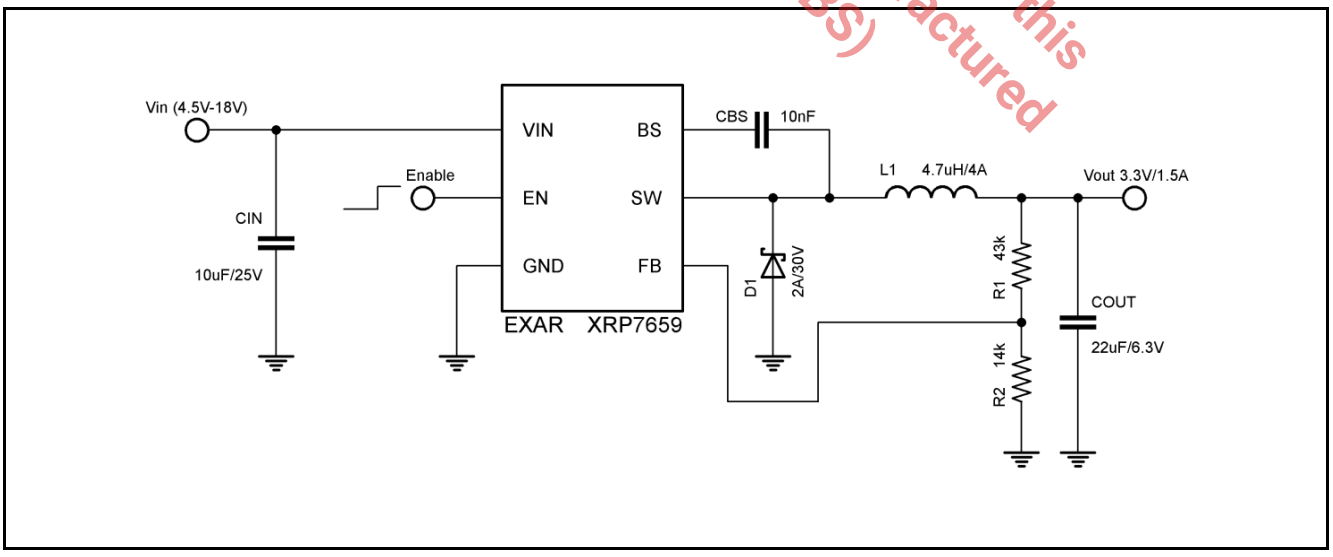

Fig. 1: XRP7659 Application Diagram

ABSOLUTE MAXIMUM RATINGS

These are stress ratings only and functional operation of the device at these ratings or any other above those indicated in the operation sections of the specifications below is not implied. Exposure to absolute maximum rating conditions for extended periods of time may affect reliability.

V_{IN} ..... -0.3V to 20V
V_{EN} ..... -0.3V to V_{IN}+0.3V
V_{SW} 21V
V_{BS} ..... -0.3V to V_{SW}+6V
V_{FB} ..... -0.3V to 6V
Operating Junction Temperature ..... 150°C
Storage Temperature ..... -65°C to 150°C
Lead Temperature (Soldering, 10 sec) ..... 260°C
Power Dissipation ..... Internally Limited
ESD Rating (HBM - Human Body Model) 2kV
ESD Rating (MM - Machine Model) 500V

OPERATING RATINGS

Input Voltage Range V_{IN} ..... 4.5V to 18V
Maximum Output Current I_{OUT} (Min) 1.5A
Ambient Temperature Range ..... -40°C to +85°C
Thermal Resistance θ_{JA} ..... 220°C/W

The product (or products) mentioned in this data sheet are no longer being manufactured and may not be ordered (OBS)

ELECTRICAL SPECIFICATIONS

Specifications are for an Operating Junction Temperature of T_J = 25°C only; limits applying over the full Operating Junction Temperature range are denoted by a "•". Minimum and Maximum limits are guaranteed through test, design, or statistical correlation. Typical values represent the most likely parametric norm at T_J = 25°C, and are provided for reference purposes only. Unless otherwise indicated, V_{IN} = V_{EN} = 12V, V_{OUT} = 3.3V.

Parameter	Min.	Typ.	Max.	Units		Conditions
V_{IN}, Input Voltage	4.5		18	V	•	
I_Q, Quiescent Current		0.8	1.1	mA		V_{FB}=0.9V
I_{SHDN}, Shutdown Supply Current		0.1	1.0	µA		V_{EN}=0V
V_{FB}, Feedback Voltage	0.785	0.810	0.835	V		
V_{FBOV}, Feedback Overvoltage Threshold		0.972		V		
I_{FB}, Feedback Bias Current	-0.1		+0.1	µA		V_{FB}=0.85V
R_{DSON}, Switch On-resistance (1)		0.35		Ω		I_{SW}=1A
I_{LEAK}, Switch Leakage Current		0.1	10	µA		V_{IN}=18V, V_{EN}=0V
I_{LIM}, Switch Current Limit	1.8	2.4		A		
V_{ENH}, EN Pin Threshold	1.5			V		
V_{ENL}, EN Pin Threshold			0.4	V		
V_{UVLO}, Input UVLO Threshold	3.3	3.8	4.3	V		V_{IN} Rising
V_{HYS}, Input UVLO Hysteresis		0.2		V		
f_{OSC1}, Oscillator frequency	1.1	1.4	1.7	MHz		
f_{OSC2}, Oscillator frequency		460		kHz		Short Circuit
D_{MAX}, Maximum Duty Cycle		90		%		V_{FB}=0.6V
D_{MIN}, Minimum Duty Cycle			0	%		V_{FB}=0.9V
t_{ON}, Minimum On Time (1)		100		ns		
T_{OTSD}, Thermal Shutdown (1)		160		°C		
T_{HYS}, Thermal Shutdown Hysteresis (1)		20		°C		
t_{SS}, Soft-start time (1)		200		µs		

Note 1: R_{DSON}, t_{ON}, T_{OTSD}, T_{HYS} and t_{SS} are guaranteed by design.

BLOCK DIAGRAM

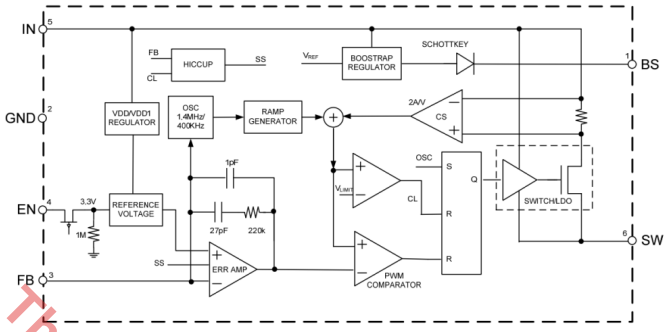

Fig. 2: XRP7659 Block Diagram

PIN ASSIGNMENT

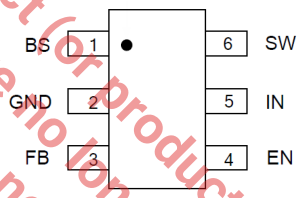

Fig. 3: XRP7659 Pin Assignment

PIN DESCRIPTION

Name	Pin Number	Description
BS	1	Bootstrap pin. Connect a 10nF bootstrap capacitor between BS and SW pins. The voltage across the bootstrap capacitor drives the internal high-side MOSFET.
GND	2	Ground pin.
FB	3	Feedback pin. Connect to a resistor divider to program the output voltage. If V_{FB} exceeds 0.972V the OVP is triggered. If V_{FB} drops below 0.25V the short circuit protection is activated.
EN	4	Enable Input Pin. Forcing this pin above 1.5V enables the IC. Forcing the pin below 0.4V shuts down the IC. For automatic enable connect a 100kΩ resistor between EN and IN.
IN	5	Power Input Pin. Must be closely decoupled to GND pin with a 10µF/25V or greater ceramic capacitor.
SW	6	Power switch output pin. Connect to inductor and bootstrap capacitor.

ORDERING INFORMATION(1)

Part Number	Temperature Range	Package	Packing Method	Lead-Free(2)
XRP7659ISTR-F	-40°C ≤ T_A ≤ +85°C	SOT23-6	Tape & Reel	Yes
XRP7659EVB	XRP7659 Evaluation Board			

Notes:
1. Refer to www.maxlinear.com/XRP7659 for most up-to-date Ordering Information.
2. Visit www.maxlinear.com for additional information on Environmental Rating.

The product (or products) mentioned in this data sheet are no longer being manufactured and may not be ordered (OBS)

TYPICAL PERFORMANCE CHARACTERISTICS

All data taken at V_{IN} = 12V, V_{EN}=5V, V_{OUT}=3.3V, T_J = T_A = 25°C, unless otherwise specified - Schematic and BOM from Application Information section of this datasheet.

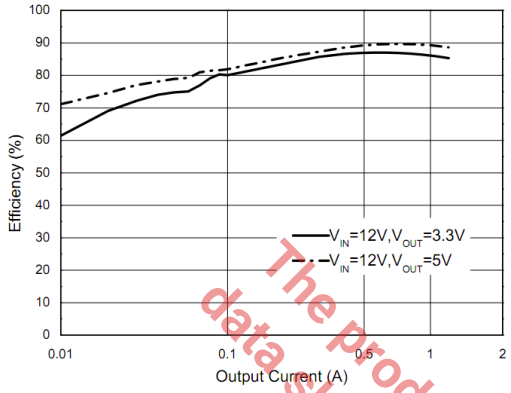

Fig. 4: Efficiency versus Output Current, V_{IN}=12V

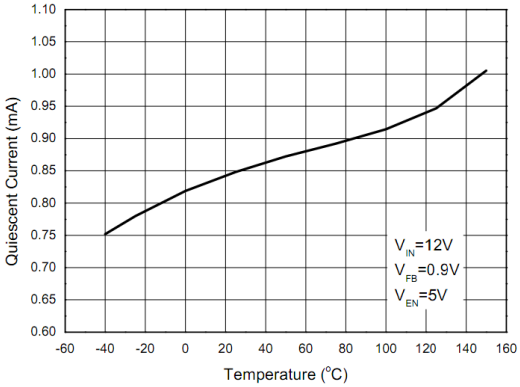

Fig. 5: Quiescent Current versus Temperature

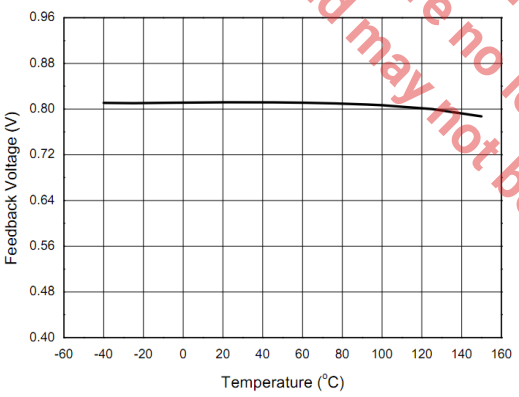

Fig. 6: Feedback Voltage versus Temperature

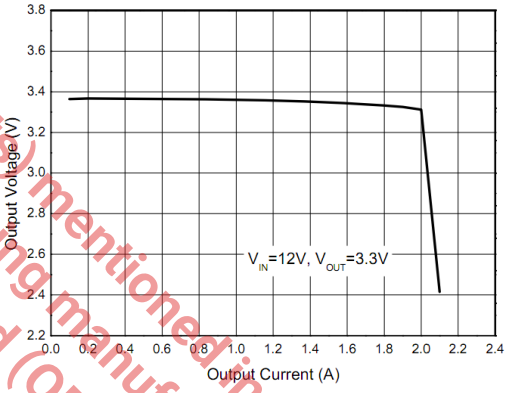

Fig. 7: Output Voltage versus Output Current

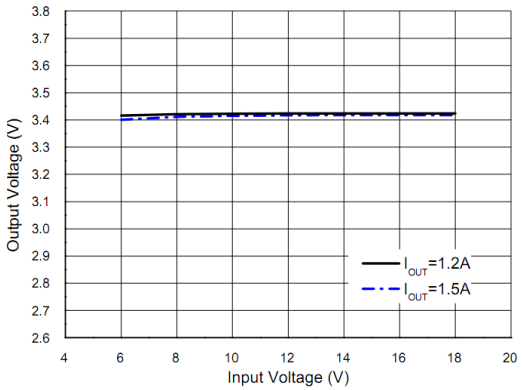

Fig. 8: Output Voltage versus Input Voltage

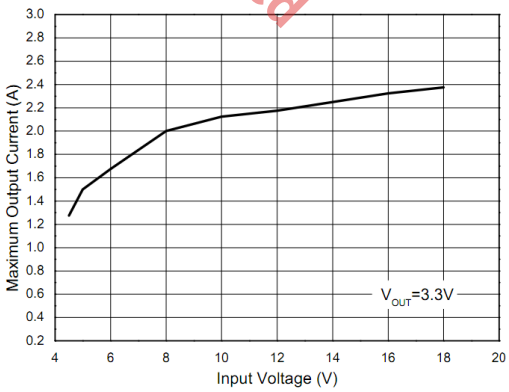

Fig. 9: Maximum Output Current versus Input Voltage

The product (or products) mentioned in this data sheet are no longer being manufactured and may not be ordered (OBS)

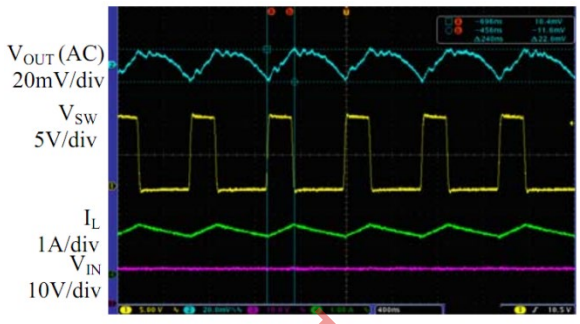

Fig. 10: Output Ripple at I_{OUT}=1.5A

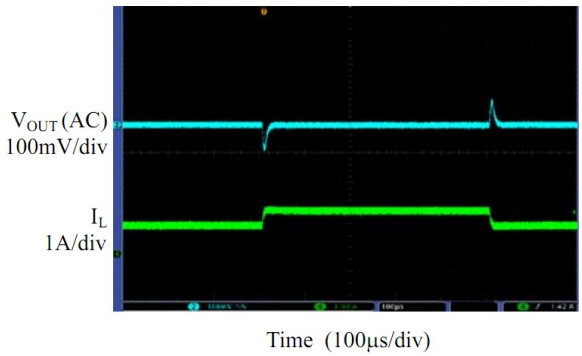

Fig. 11: Load Step Transient, I_{OUT}=1A to 1.5A

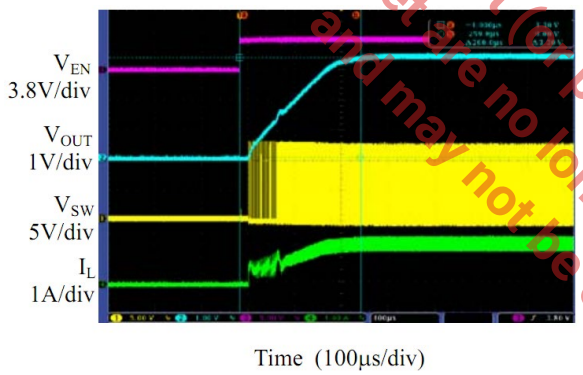

Fig. 12: Enable Turn-on Characteristic
2.6Ω resistive Load

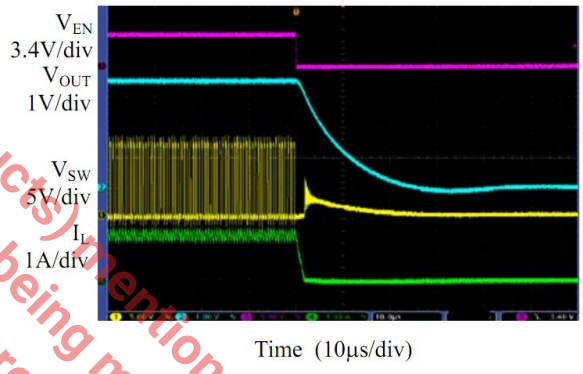

Fig. 13: Enable Turn-off Characteristic
2.6Ω resistive Load

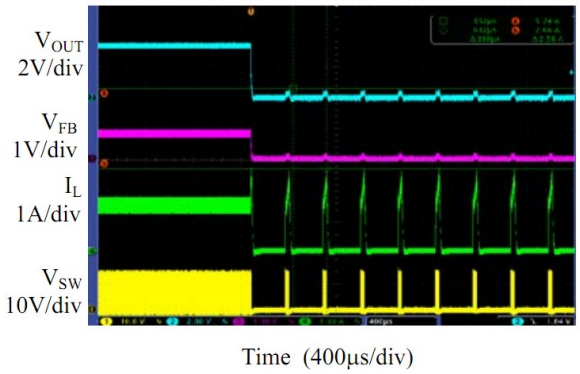

Fig. 14: Onset of Short-circuit Protection
I_{OUT}=1.5A

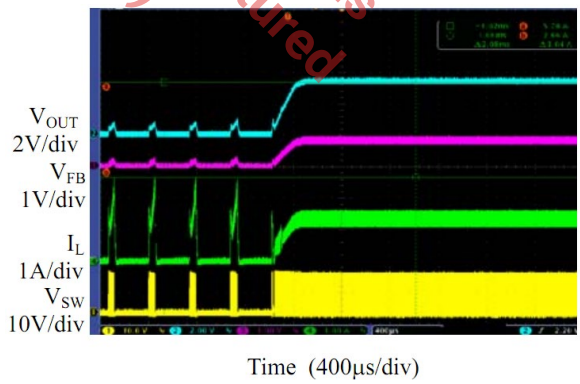

Fig. 15: Short-circuit recovery
R_{LOAD}=2.6Ω

The product(s) mentioned in this data sheet are no longer being manufactured and may not be ordered (OBS)

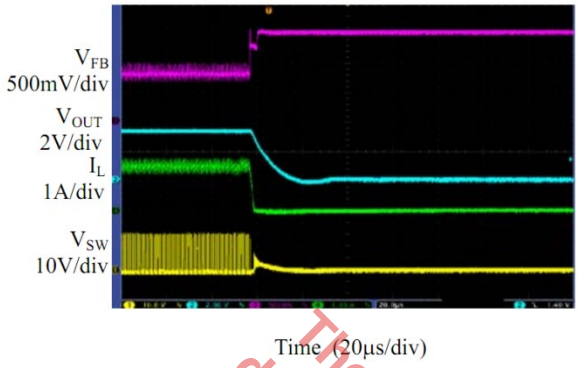

Fig. 16: Onset of Over-voltage Protection, I_{OUT}=1.5A

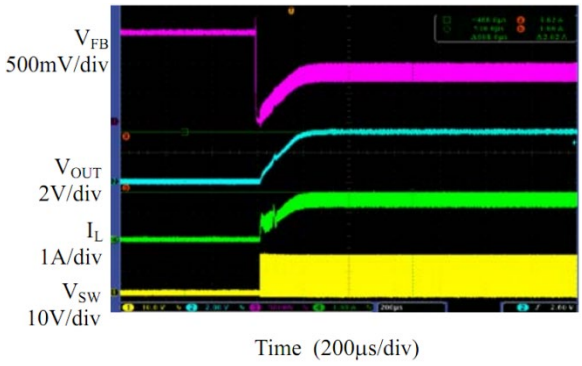

Fig. 17: Over-voltage Recovery, I_{OUT}=1.5A

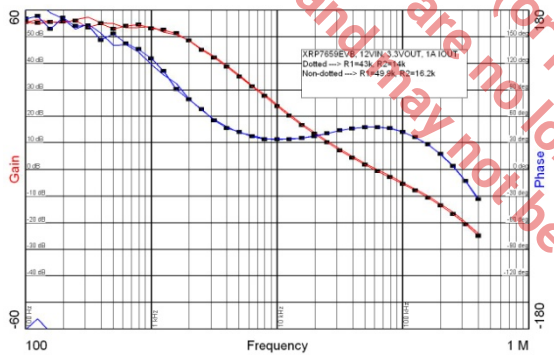

Fig. 18: Gain and Phase Margin Plots of XRP7659EVB
~60kHz Crossover frequency; ~50° Phase Margin

The product (or products) mentioned in this data sheet are no longer being manufactured and may not be ordered (OBS)

APPLICATION INFORMATION

The XRP7659 is a non-synchronous current-mode step-down DC-DC converter capable of driving a 1.5A load. The integrated high-side MOSFET has been optimized to provide high efficiency within XRP7659 operating ratings. The high switching frequency of 1.4MHz allows the use of a small inductor and a correspondingly small output capacitor that reduce the solution size and cost. The high switching frequency also provides a very fast transient response as shown in figure 11. The built in loop compensation, bootstrap diode and soft-start further reduce component cost. A host of protection features including UVLO, OCP, OTP, OVP and short-circuit help insure safe operation under abnormal operating conditions.

PROGRAMMING THE OUTPUT VOLTAGE

To program V_{OUT} use a resistor divider R1/R2 as shown in figure 1. R1 in conjunction with the internal compensation comprises the loop compensation. Calculate R2 from:

$$R2 = \frac{R1}{\frac{V_{OUT}}{0.81V} - 1}$$

A resistor selection guide for common values of V_{OUT} is shown in table 1.

VOUT	R1(kΩ)	R2(kΩ)
1.8V	100	82
2.5V	39	18.7
3.3V	43	14
5.0V	47	9.09

Table 1: Resistor Selection

SELECTING THE INDUCTOR

Select the inductor for inductance L, saturation current I_{sat} and DC current I_{DC}. I_{sat} and I_{DC} should be larger than 2.4A and 2.2A respectively. This will allow the inductor to withstand an accidental overload until the IC's OCP get activated. Calculate the inductance from:

$$L = \frac{V_{OUT} \times (V_{IN} - V_{OUT})}{V_{IN} \times \Delta I_L \times f_s}$$

ΔI_L is inductor current ripple, nominally set at 30% of I_{OUT}.

SELECTING THE INPUT CAPACITOR

The input capacitor C_{IN} supplies the pulsating input current resulting from fast switching of the high-side MOSFET. Ceramic capacitors are recommended because they have low ESR/ESL and can therefore meet the high di/dt requirement. A 10µF capacitor is sufficient for most applications.

SELECTING THE OUTPUT CAPACITOR

The output capacitor C_{OUT} filters the inductor current ripple, providing DC to the load. C_{OUT} also limits the V_{OUT} transients arising from a sudden current load step. A 22µF ceramic capacitor is sufficient for most applications.

PCB LAYOUT GUIDELINES

Following guidelines will help safeguard against EMI related problems.

1. Minimize the loop area among C_{IN}, high-side MOSFET and D1. To achieve this, C_{IN} and D1 have to be placed as closed to IC pins IN and SW as possible. Also the ground return of C_{IN} and D1 should be close. Use short and wide traces for connecting these components.
2. Minimize the loop area among D1, L1 and C_{OUT}. Use short and wide traces for connecting these components.
3. From the above it follows that the ground returns of C_{IN}, D1 and C_{OUT} should be as close as possible.
4. Route the sensitive FB trace away from noisy SW.

The Product (or products) mentioned in this data sheet are no longer being manufactured and may not be ordered (OBS)

TYPICAL APPLICATIONS

12V TO 5.0V/1.5A CONVERSION

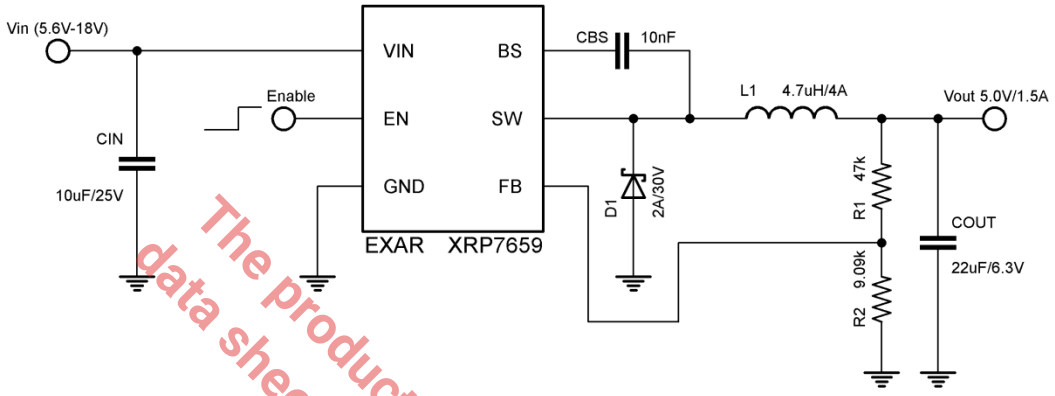

12V TO 3.3V/1.5A CONVERSION

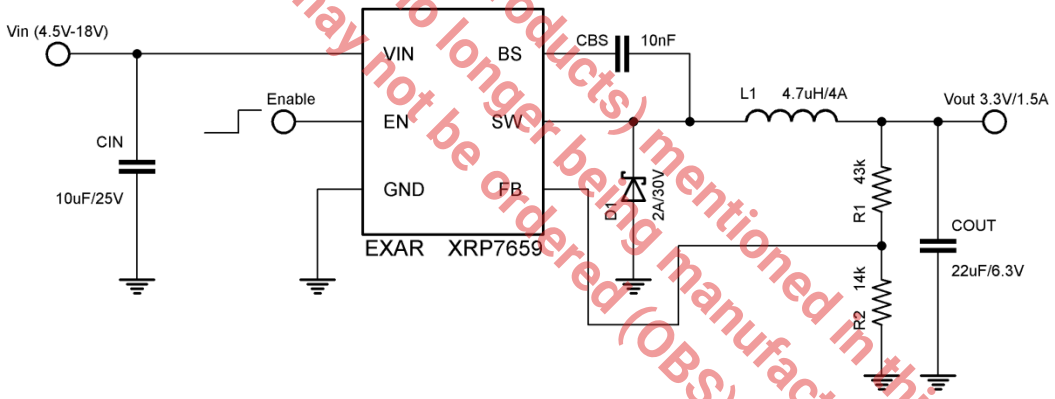

12V TO 1.8V/1.5A CONVERSION

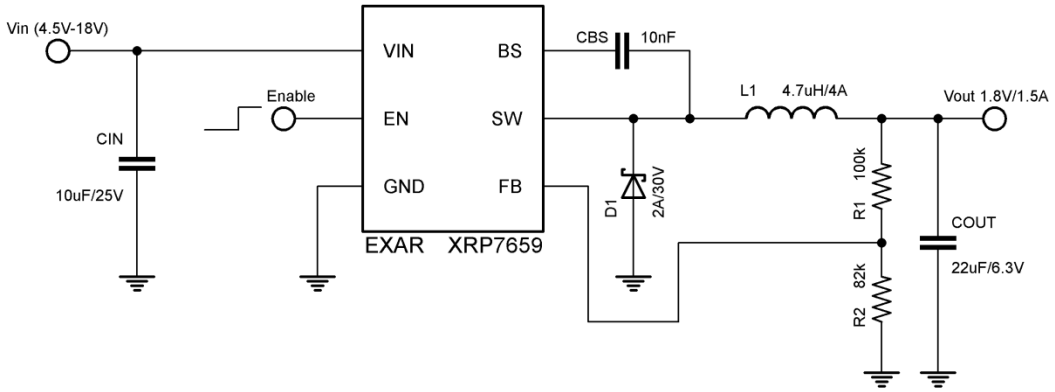

The product (or products) mentioned in this data sheet are no longer being manufactured and may not be ordered (OBS)

PACKAGE SPECIFICATION

SOT23-6

Unit: mm(inch)

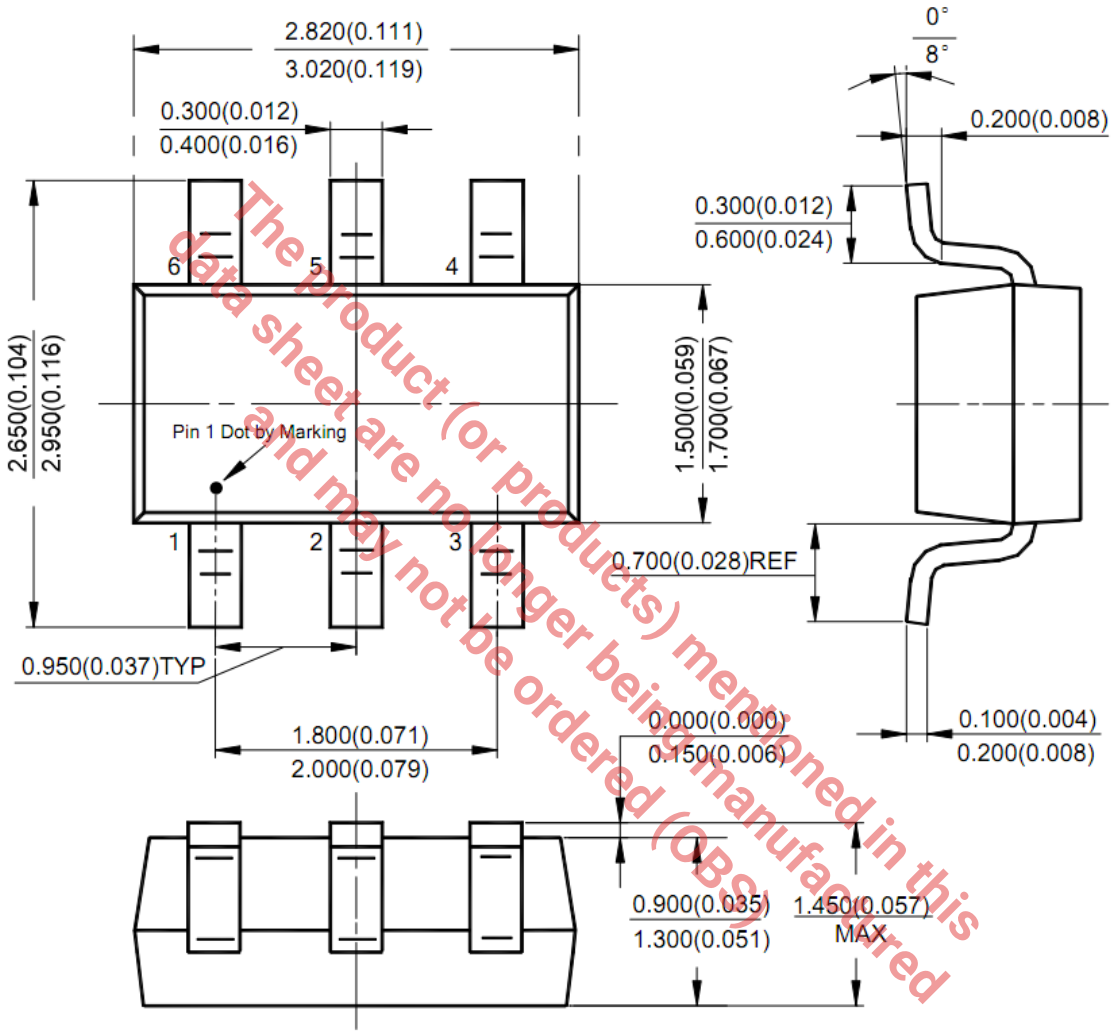

The product (or products) mentioned in this data sheet are no longer being manufactured and may not be ordered (OBS)

REVISION HISTORY

Revision	Date	Description
1.0.0	07/27/2012	Initial release of datasheet
1.1.0	08/09/2012	Corrected R1/R2 resistors values for 1.8Vout Typical Application Diagram Addition of figure 18: Gain and Phase margin plots for XRP7659EVB
1.2.0	08/15/2012	Corrected ordering quantity per reel
2.2.1	11/01/2019	Updated to MaxLinear logo. Updated Ordering Information.

The product (or products) mentioned in this data sheet are no longer being manufactured and may not be ordered (OBS)

CORPORATE HEADQUARTERS:

5966 La Place Court

Suite 100

Carlsbad, CA 92008

Tel.: +1 (760) 692-0711

Fax: +1 (760) 444-8598

www.maxlinear.com

The content of this document is furnished for informational use only, is subject to change without notice, and should not be construed as a commitment by Maxlinear, Inc. Maxlinear, Inc. Assumes no responsibility or liability for any errors or inaccuracies that may appear in the informational content contained in this guide. Complying with all applicable copyright laws is the responsibility of the user. Without limiting the rights under copyright, no part of this document may be reproduced into, stored in, or introduced into a retrieval system, or transmitted in any form or by any means (electronic, mechanical, photocopying, recording, or otherwise), or for any purpose, without the express written permission of Maxlinear, Inc.

Maxlinear, Inc. Does not recommend the use of any of its products in life support applications where the failure or malfunction of the product can reasonably be expected to cause failure of the life support system or to significantly affect its safety or effectiveness. Products are not authorized for use in such applications unless Maxlinear, Inc. Receives, in writing, assurances to its satisfaction that: (a) the risk of injury or damage has been minimized; (b) the user assumes all such risks; (c) potential liability of Maxlinear, Inc. Is adequately protected under the circumstances.

Maxlinear, Inc. May have patents, patent applications, trademarks, copyrights, or other intellectual property rights covering subject matter in this document. Except as expressly provided in any written license agreement from Maxlinear, Inc., the furnishing of this document does not give you any license to these patents, trademarks, copyrights, or other intellectual property.

Maxlinear, the Maxlinear logo, and any Maxlinear trademarks, MxL, Full-Spectrum Capture, FSC, G.now, AirPHY and the Maxlinear logo are all on the products sold, are all trademarks of Maxlinear, Inc. or one of Maxlinear's subsidiaries in the U.S.A. and other countries. All rights reserved. Other company trademarks and product names appearing herein are the property of their respective owners.

© 2012 - 2019 Maxlinear, Inc. All rights reserved.