XRP2523

1.5A Single Channel USB 3.0 Power Distribution Switch

September 2012 Rev. 1.1.0

GENERAL DESCRIPTION

The XRP2523 is a single channel integrated high-side power distribution switch optimized for self or bus-powered USB applications and compliant with the latest USB 3.0 specification. It accepts an input voltage between of 3.2V and 6.5V allowing for operations from industry standard 3.3V and 5V power rails.

The XRP2523 is provided with an enable pin with integrated soft start while an error flag is available to indicate any fault conditions. With a low quiescent current as well as a small package, the XRP2523 is ideal for battery powered applications. The power-switch rise and fall times are controlled to minimize current surges during turn on/off.

Built-in over current, under voltage lockout (UVLO), reverse current and over temperature protections insure safe operations under abnormal operating conditions.

XRP2523 is offered in a RoHS compliant "green"/halogen free 5-pin SOT-23 package.

APPLICATIONS

- **Self Powered USB 2.0 and 3.0 Hubs**
- **USB Compliant V_{BUS} Power Distribution**
- **Audio-Video Equipment**
- **Portable Equipment**

FEATURES

- **1.5A Single Channel Current Switch**
  - 1.5A continuous load current
  - 1.6A Over-current Limit
- **3.2V to 6.5V Input Voltage Range**
- **USB 2.0 and USB 3.0 Compliant**
- **Active High Enable**
- **Soft Start**
- **Channel Fault Flag Indicator**
  - 9ms Blanking Time
- **UVLO, Reverse Current, Short circuit and Thermal Shutdown Protection**
- **RoHS Compliant, Green/Halogen Free 5-Pin SOT-23 Package**

The product (or products) mentioned in this data sheet are no longer being manufactured and may not be ordered (OBS)

TYPICAL APPLICATION DIAGRAM

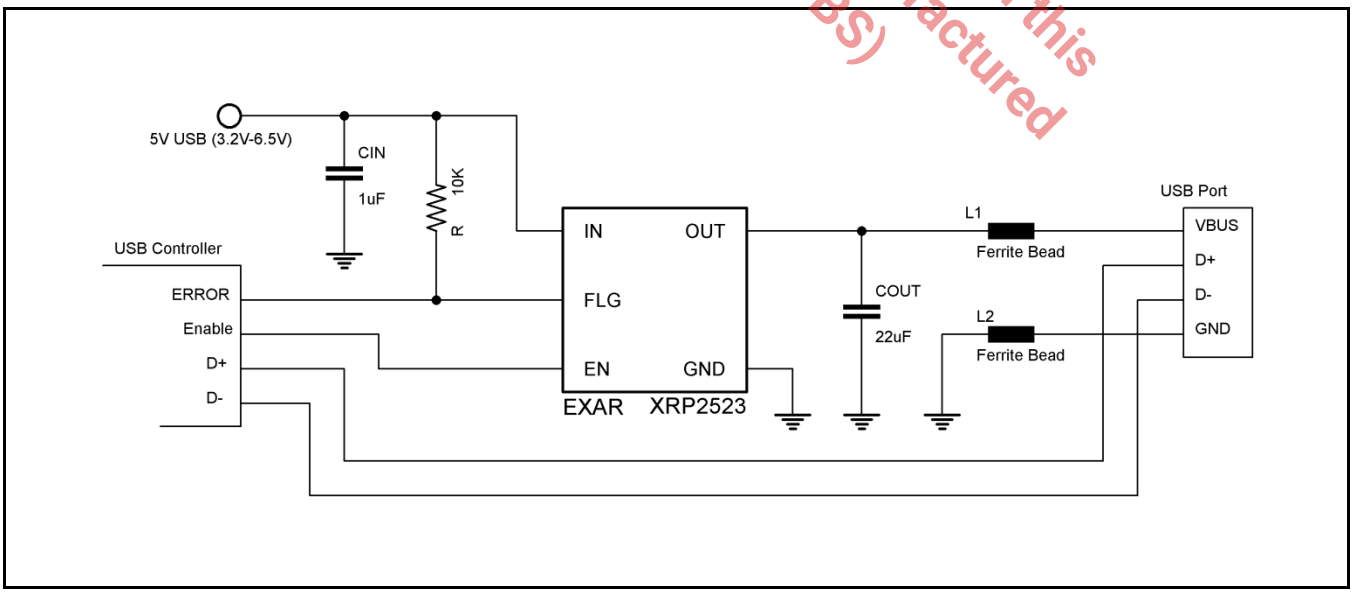

Fig. 1: XRP2523 Application Diagram

ABSOLUTE MAXIMUM RATINGS

These are stress ratings only and functional operation of the device at these ratings or any other above those indicated in the operation sections of the specifications below is not implied. Exposure to absolute maximum rating conditions for extended periods of time may affect reliability.

V_{IN} 7.0V
V_{EN}, V_{FLG} ..... -0.3V to 7.0V
Junction Temperature ..... 125°C
Storage Temperature ..... -65°C to 150°C
Power Dissipation ..... Internally Limited
Lead Temperature (Soldering, 10 sec) ..... 260°C
ESD Rating (HBM - Human Body Model) 2kV

OPERATING RATINGS

Input Voltage Range V_{IN} ..... 3.2V to 6.5V
Ambient Temperature Range ..... -40°C to 85°C
Thermal Resistance θ_{JA} 250ºC/W

The product (or Products) mentioned in this datasheet are no longer being manufactured and may not be ordered (OBS)

ELECTRICAL SPECIFICATIONS

Specifications are for an Operating Junction Temperature of $T_A = T_J = 25°C$ only; limits applying over the full Operating Junction Temperature range are denoted by a "•". Minimum and Maximum limits are guaranteed through test, design, or statistical correlation. Typical values represent the most likely parametric norm at $T_A = 25°C$, and are provided for reference purposes only. Unless otherwise indicated, $V_{IN} = 5V$, $C_{IN} = C_{OUT} = 1\mu F$, $T_J = 25°C$.

Parameter	Min.	Typ.	Max.	Units		Conditions
Input Supply Voltage	3.2		6.5	V		
Input Quiescent Current		40		µA		V_{IN}=5V, No load
Input Shutdown Current		0.1	1	µA		V_{IN}=5V, V_{EN}=0V
Maximum Output Current per channel	1.5			A		
Output Leakage Current		0.5	1	µA		V_{EN}=0V, V_{OUT}=0V
Output MOSFET Resistance		85		mΩ		I_{OUT}=0.1A
Output turn-on rise time		400		µs		V_{IN}=5V, R_L=10Ω, C_{OUT} not used
Output turn-off fall time		0.7	20	µs		V_{IN}=5V, R_L=10Ω, C_{OUT} not used
Current limit threshold	1.6	2.5	3.2	A		
EN input threshold	0.4	0.8	1.2	V		
Over temperature shutdown threshold		145		°C		Temperature rising
Over temperature shutdown threshold hysteresis		20		°C		
Under-voltage lockout threshold		2.3		V		V_{IN} rising
Under-voltage lockout hysteresis		200		mV		
FLG output logic low voltage			400	mV		
FLG blanking time	4	9		ms		
FLG Off-State Current			1	µA		

BLOCK DIAGRAM

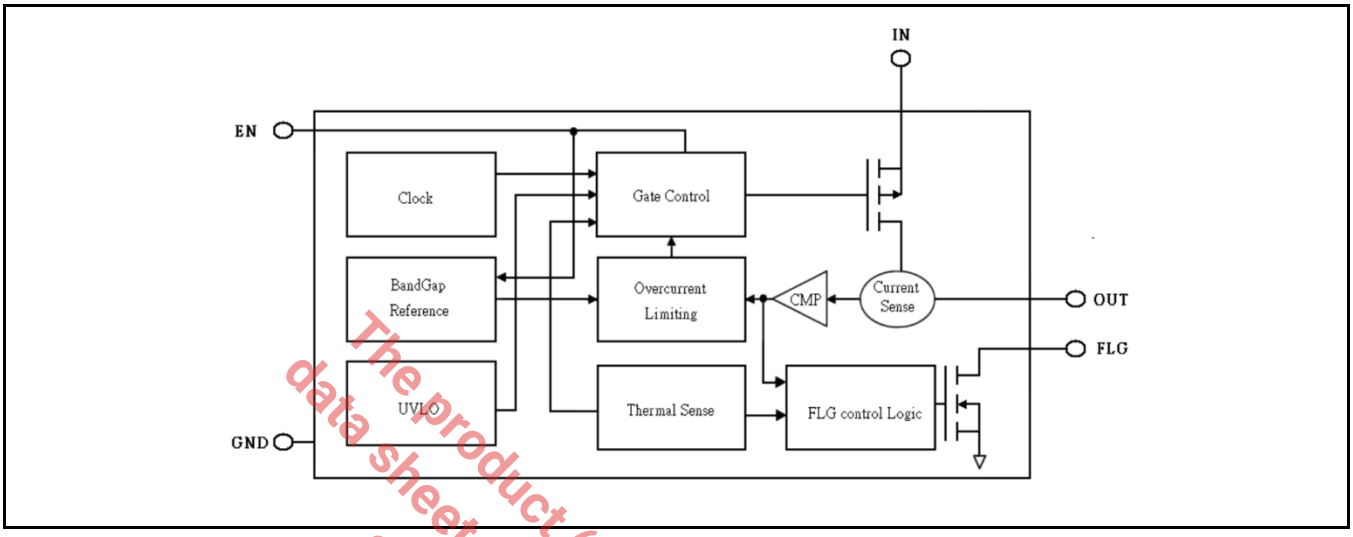

Fig. 2: XRP2523 Block Diagram

PIN ASSIGNMENT

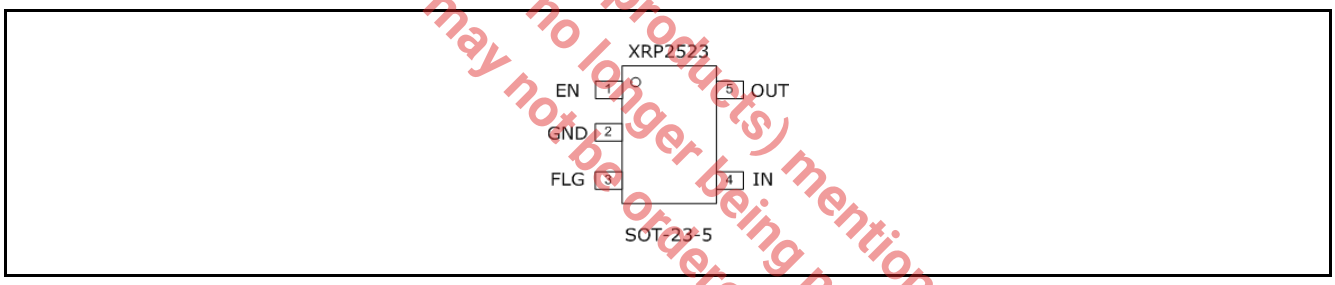

Fig. 3: XRP2523 Pin Assignment

The product (or products) mentioned in this data sheet are no longer being manufactured and may not be ordered (OBS)

PIN DESCRIPTION

Name	Pin Number	Description
EN	1	Channel Enable Input Active High
GND	2	Ground Signal
FLG	3	Error Flag Signal Active low open drain output. Active on over-current, over-temperature, short-circuit or UVLO conditions.
IN	4	Voltage Input Pin
OUT	5	Voltage Output Pin

ORDERING INFORMATION

Part Number	Temperature Range	Marking	Package	Packing Quantity	Note 1	Note 2
XRP2523ISTR-F	-40°C≤T_A≤+85°C	KCWW X	5-Pin SOT23	2.5K/Tape & Reel	RoHS Compliant Halogen Free	Single Channel Active high
XRP2523EVB	XRP2523 Evaluation Board					

"YY" = Year – "WW" = Work Week – "X" = Lot Number; when applicable.

TYPICAL PERFORMANCE CHARACTERISTICS

All data taken at V_{IN} = 5V, C_{IN} = 1µF, C_{OUT} = 22µF, T_J = T_A = 25°C, unless otherwise specified - Schematic and BOM from Application Information section of this datasheet.

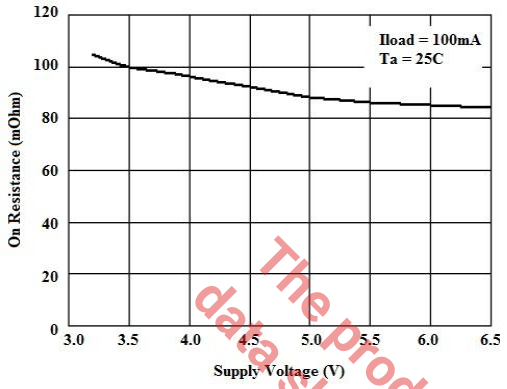

Fig. 4: Output On-Resistance vs. Supply Voltage

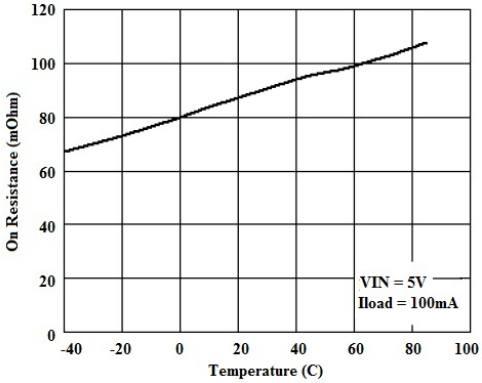

Fig. 5: Output On-Resistance vs. Temperature

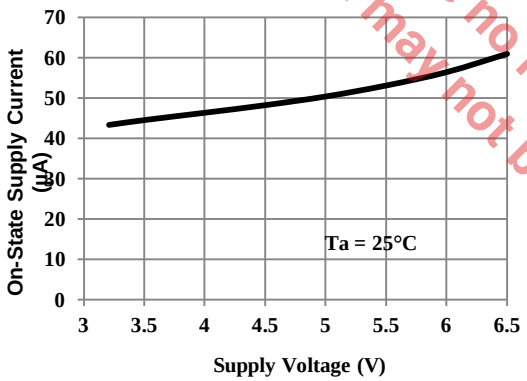

Fig. 6: ON-State Supply Current vs. Supply Voltage

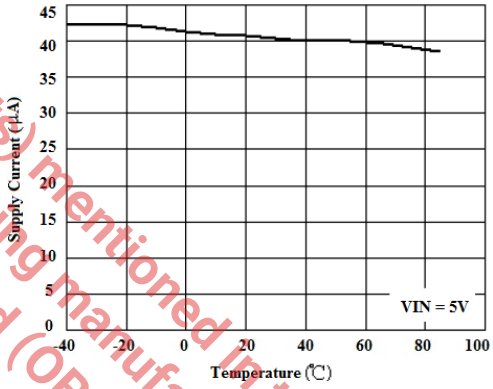

Fig. 7: ON-State Supply Current vs. Temperature

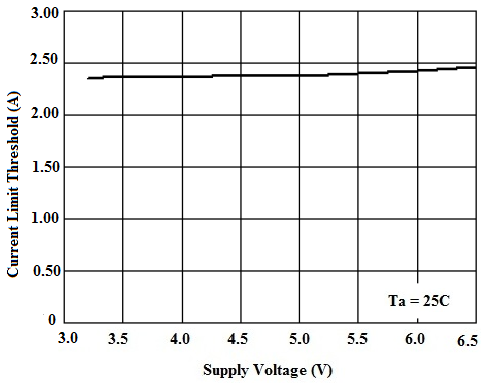

Fig. 8: Current Limit Threshold vs. Supply Voltage

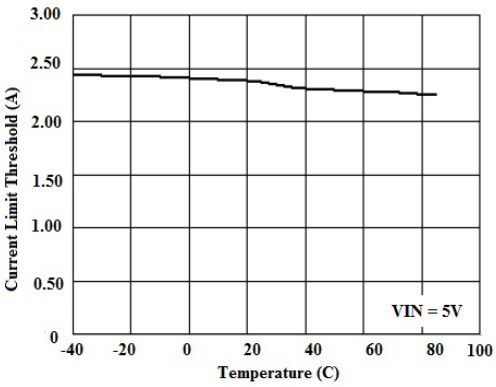

Fig. 9: Current Limit Threshold vs. Temperature

The product (or products) mentioned in this data sheet are no longer being manufactured and may not be ordered (OBS)

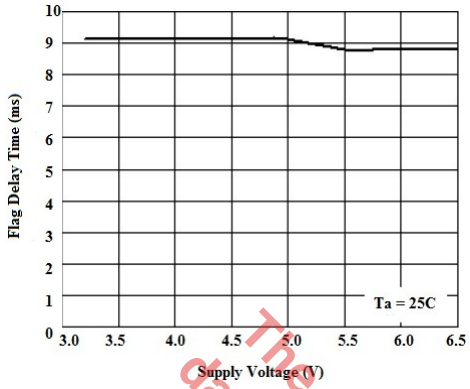

Fig. 10: Flag Delay Time vs. Supply Voltage

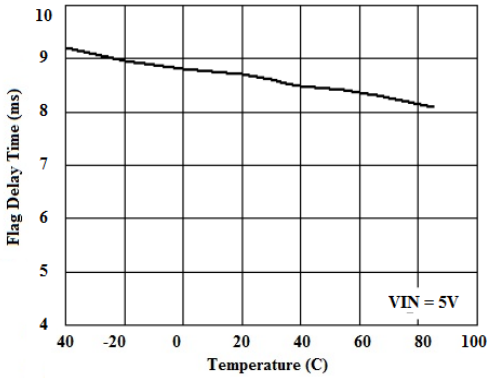

Fig. 11: Flag Delay Time vs. Temperature

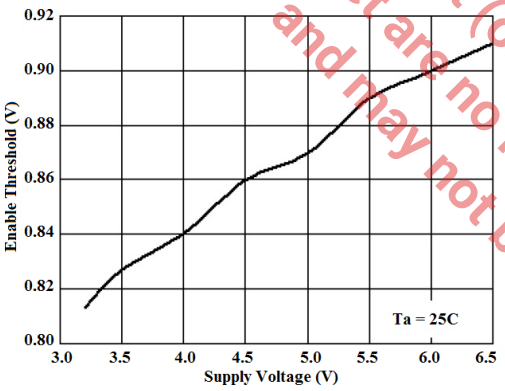

Fig. 12: Enable Threshold vs. Supply Voltage

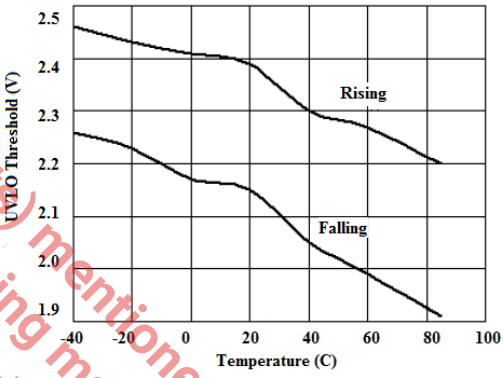

Fig. 13: UVLO Threshold Voltage vs. Temperature

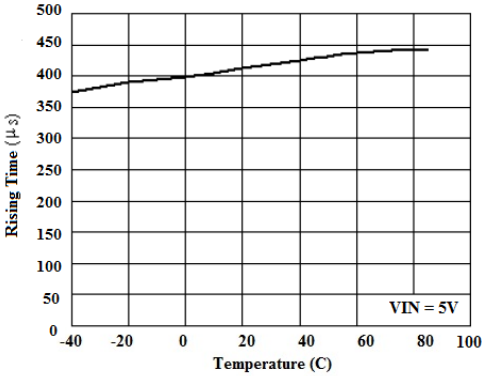

Fig. 14: Output Rising Time vs. Temperature

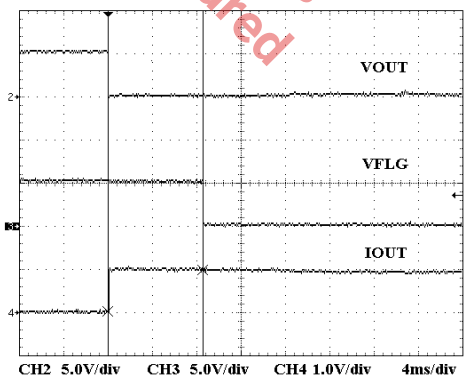

Fig. 15: Short circuit protection
V_{IN} = 5.0V

The product (or products) mentioned in this data sheet are no longer being manufactured and may not be ordered (OBS)

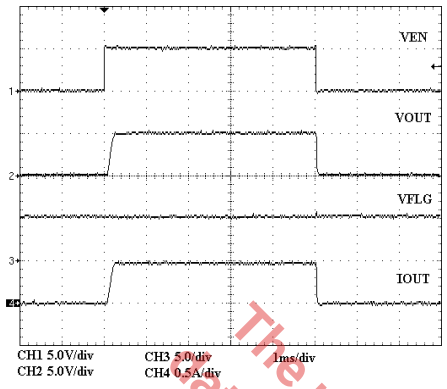

Fig. 16: Turn-On/Off Characteristics
C_{OUT}=1µF, R_{LOAD}=10Ω

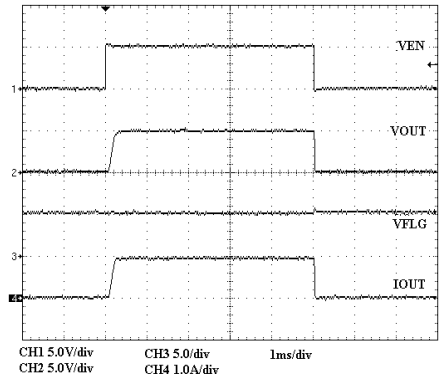

Fig. 17: Turn-On/Off Characteristics
C_{OUT}=1µF,R_{LOAD}=5.1Ω

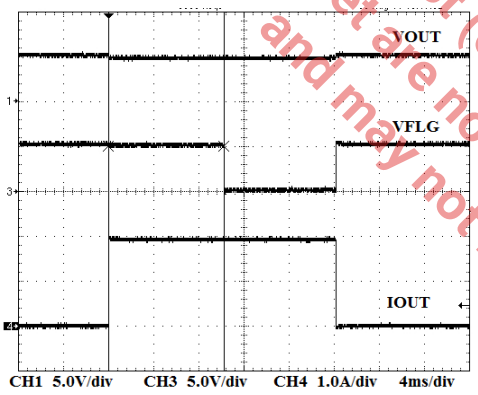

Fig. 18: Current Limit Operation
V_{IN} = 5V, R_{LOAD} = 2.5Ω

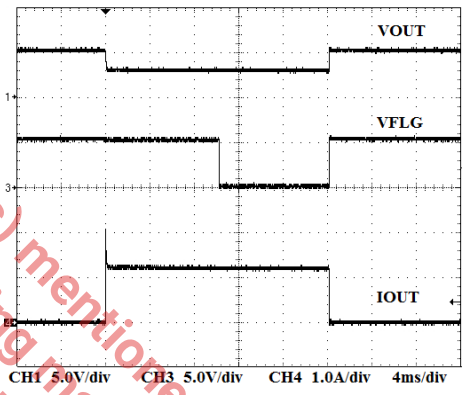

Fig. 19: Current Limit Operation
V_{IN} = 5.2V, R_{LOAD} = 2.5Ω

The product (or products) mentioned in this data sheet are no longer being manufactured and may not be ordered (OBS)

APPLICATION INFORMATION

The XRP2523 device is a single channel integrated high-side power distribution switch that can be used in any self or bus powered USB applications. It is compliant with the latest USB 3.0 specifications. The reverse current protection feature prevents current to flow from OUT to IN when the device is disabled.

INPUT & OUTPUT

It is important to place a 1µF ceramic bypass capacitor from IN to GND as close as possible to the device in order to control supply transients. A high capacitor value can further reduce voltage droop on the input.

Placing bulk capacitance of at least 22µF at the output pin reduces power supply transients under heavy current load conditions.

Furthermore, bypassing the output pin with a 0.1µF to 1µF ceramic capacitor placed close to OUT and PGND improves the device response to short-circuit transients.

ENABLE CONTROL

The device is disabled when the enable pin is in logic low condition. During this condition, the internal circuitry and the switch are turned off thereby reducing the supply current 0.1µA typical. Enable must be driven logic high for a clearly defined input. Floating the input may cause unpredictable operation.

ERROR FLAG

The error flag signal (FLG output pin) is an open-drain output and is pulled low (active low) upon detection of the following fault conditions:

- Over-current condition
- Over-temperature condition
- Short-circuit condition
- Under voltage lockout condition

Under voltage lockout condition is flagged immediately while the over–current, over-temperature and short-circuit conditions are reported only if the condition persists continuously for longer than the blanking time of 9ms typical. The blanking time prevents erroneous reporting of current faults due to brief output current spikes.

Once activated, the error flag signal remains low until all fault conditions have been removed.

CURRENT LIMIT

The current limit threshold is preset internally. It protects the output MOSFET switch from damages resulting from undesirable short circuit conditions or excess inrush current, which is often encountered during hot plug-in. The low limit of the current limit threshold of the XRP2523 allows a minimum current of 1.6A through the MOSFET switch.

An over-current condition is detected once the current limit threshold is exceeded, and output current is then limited to a constant current value. Triggering the current limit function is signaled by the Error Flag after 9ms of blanking time period.

UNDER-VOLTAGE LOCKOUT

Under-voltage lockout function (UVLO) keeps the internal power switch from being turned on until the power supply exceeds 2.3V typically, even if the switch is enabled. Upon detection of an input voltage below approximately 2.3V, the power switch is turned off and a fault condition is reported by the error flag signal.

THERMAL PROTECTION

Internal thermal sensing circuitry monitors the operating temperature of the device. Upon detection of a temperature in excess of 145°C, the power switch is disabled preventing any damages to the device while a fault condition is reported by the error flag signal. A built-in 20°C hysteresis allows the device to cool down to 125°C before resuming normal operation by turning the switch on. At this time, the error flag signal is cleared.

The product (or product mentioned in this data sheet) are no longer being manufactured and may not be ordered (OBS)

TEST CIRCUIT

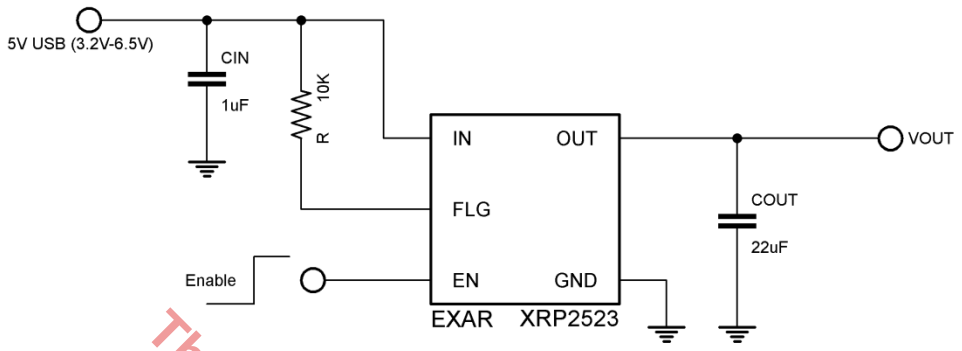

The Product (or products) mentioned in this data sheet are no longer being manufactured and may not be ordered (OBS)

PACKAGE SPECIFICATION

5-PIN SOT23

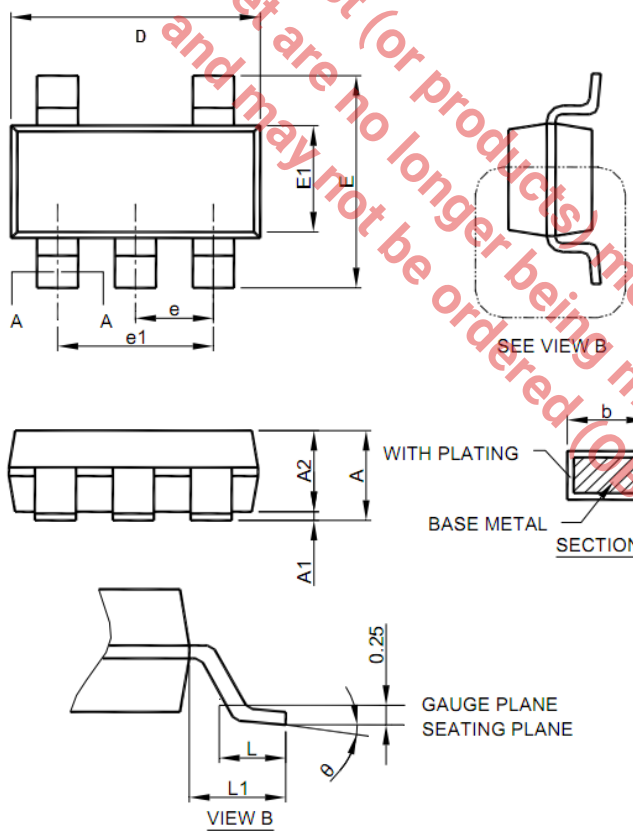

SYMBOL	SOT-23-5	
	MILLIMETERS	
	MIN.	MAX.
A	0.95	1.45
A1	0.00	0.15
A2	0.90	1.30
b	0.30	0.50
c	0.08	0.22
D	2.80	3.00
E	2.60	3.00
E1	1.50	1.70
e	0.95 BSC	
e1	1.90 BSC	
L	0.30	0.60
L1	0.60 REF	
θ	0°	8°

Note : 1. Refer to JEDEC MO-178AA.
2. Dimension "D" does not include mold flash, protrusions or gate burrs. Mold flash, protrusion or gate burrs shall not exceed 10 mil per side.
3. Dimension "E1" does not include inter-lead flash or protrusions.
4. Controlling dimension is millimeter, converted inch dimensions are not necessarily exact.

REVISION HISTORY

Revision	Date	Description
1.1.0	09/18/2012	Initial release of datasheet

The product (or products) mentioned in this data sheet are no longer being manufactured and may not be ordered (OBS)

FOR FURTHER ASSISTANCE

Email: customersupport@exar.com

Exar Technical Documentation: http://www.exar.com/TechDoc/default.aspx?

EXAR CORPORATION

HEADQUARTERS AND SALES OFFICES

48720 Kato Road

Fremont, CA 94538 – USA

Tel.: +1 (510) 668-7000

Fax: +1 (510) 668-7030

www.exar.com

NOTICE

EXAR Corporation reserves the right to make changes to the products contained in this publication in order to improve design, performance or reliability. EXAR Corporation assumes no responsibility for the use of any circuits described herein, conveys no license under any patent or other right, and makes no representation that the circuits are free of patent infringement. Charts and schedules contained here in are only for illustration purposes and may vary depending upon a user's specific application. While the information in this publication has been carefully checked; no responsibility, however, is assumed for inaccuracies.

EXAR Corporation does not recommend the use of any of its products in life support applications where the failure or malfunction of the product can reasonably be expected to cause failure of the life support system or to significantly affect its safety or effectiveness. Products are not authorized for use in such applications unless EXAR Corporation receives, in writing, assurances to its satisfaction that: (a) the risk of injury or damage has been minimized; (b) the user assumes all such risks; (c) potential liability of EXAR Corporation is adequately protected under the circumstances.

Reproduction, in part or whole, without the prior written consent of EXAR Corporation is prohibited.