# XRP7674

## 2A 18V Synchronous PFM/PWM Step-Down Regulator

February 2013 Rev. 1.0.0

## GENERAL DESCRIPTION

The XRP7674 is a 2A capable synchronous current-mode PWM step down (buck) voltage regulator with improved light current load efficiency. A wide 4.5V to 18V input voltage range allows for single supply operations from industry standard 5V and 12V power rails.

With a 340kHz constant operating frequency and integrated high and low-side 100mΩ/100mΩ MOSFETs, the XRP7674 reduces the overall component count and solution footprint. Current-mode control provides fast transient response and cycle-by-cycle OCP. An adjustable soft-start prevents inrush current at turn-on, and in shutdown mode the supply current drops to 0.1μA. At light current loads, the XRP7674 operates in Discontinuous Conduction Mode (DCM) and is complemented by a pulse frequency modulation mode (PFM) to provide excellent conversion efficiency.

Built-in output over-voltage (open load), over temperature, cycle-by-cycle over-current, under-voltage lockout (UVLO) and hiccup mode short-circuit protection insures safe operation under abnormal operating conditions.

The XRP7674 is offered in a RoHS compliant, "green"/halogen free 8-pin SOIC package.

## APPLICATIONS

- **Distributed Power Architecture**
- **Portable Equipment**
- **Point of Load Converter**
- **Audio-Video Equipment**

## FEATURES

- **2A Continuous Output Current**
- **4.5V to 18V Wide Input Voltage**
  - 0.925V to 16V Adjustable Output Voltage
  - ±2% Output Voltage Accuracy
- **PWM Current-Mode Control**
  - 340kHz Constant Operations
  - Up to 95% Efficiency
- **Light-Load efficiency**
  - Discontinuous Conduction Mode (DCM)
  - Pulse Frequency Modulation Mode (PFM)
- **Programmable Soft-Start and Enable Function**
- **Built-in Thermal, Over-Current, UVLO, Output Over-Voltage and hiccup mode short-circuit protection**
- **RoHS Compliant, "Green"/Halogen Free 8-Pin SOIC Package**

The product(s) mentioned in this data sheet are no longer being manufactured and may not be ordered. (OBS)

## TYPICAL APPLICATION DIAGRAM

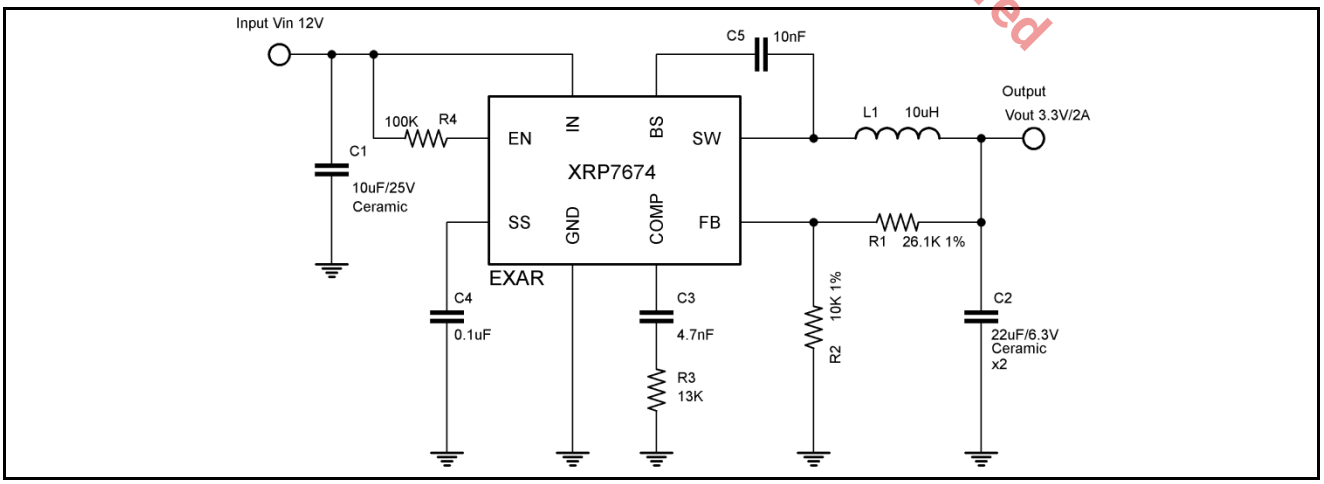


Fig. 1: XRP7674 Application Diagram

## ABSOLUTE MAXIMUM RATINGS

These are stress ratings only and functional operation of the device at these ratings or any other above those indicated in the operation sections of the specifications below is not implied. Exposure to absolute maximum rating conditions for extended periods of time may affect reliability.

Supply Voltage $V_{IN}$ ..... -0.3V to 20V
Switch Node Voltage $V_{SW}$ ..... 21V
Boost Voltage $V_{BS}$ ..... -0.3 to $V_{SW}$+6V
Enable Voltage $V_{EN}$ ..... -0.3 to $V_{IN}$
All Other Pins ..... -0.3 to +6V
Junction Temperature ..... 150°C
Storage Temperature ..... -65°C to 150°C
Lead Temperature (Soldering, 10 sec) ..... 260°C
ESD Rating (HBM - Human Body Model) ..... 2kV
ESD Rating (MM - Machine Model) ..... 200V
Moisture Sensitivity Level (MSL) ..... 3

## OPERATING RATINGS

Input Voltage $V_{IN}$ ..... 4.5V to 18V
Ambient Operating Temperature ..... -40°C to 85°C
Maximum Output Current ..... 2A min
Thermal Resistance $\theta_{JA}$ ..... 105°C/W

The product (or products) mentioned in this data sheet are no longer being manufactured and may not be ordered (OBS)

## ELECTRICAL SPECIFICATIONS

Specifications are for an Operating Ambient Temperature of $T_A$ = 25°C only; limits applying over the full Ambient Operating Temperature range are denoted by a "•". Minimum and Maximum limits are guaranteed through test, design, or statistical correlation. Typical values represent the most likely parametric norm at $T_A$ = 25°C, and are provided for reference purposes only. Unless otherwise indicated, $V_{IN}$ = $V_{EN}$ = 12V, $V_{OUT}$=3.3V.

| Parameter | Min. | Typ. | Max. | Units | | Conditions |
|---|---|---|---|---|---|---|
| Shutdown Supply Current | | 0.1 | 10 | µA | | $V_{EN}$=0V |
| Quiescent Current | | 1.2 | 1.4 | mA | | $V_{EN}$=3V, $V_{FB}$=1V |
| Feedback Voltage $V_{FB}$ | 0.907 | 0.925 | 0.943 | V | | |
| Feedback Overvoltage Threshold | | 1.1 | | V | | |
| Feedback Bias Current | -0.1 | | 0.1 | µA | | $V_{FB}$=1V |
| Error Amplifier Voltage Gain $A_{EA}$ [1] | | 400 | | V/V | | |
| Error Amplifier Transconductance $G_{EA}$ | | 800 | | µA/V | | |
| COMP to Current Sense Transconductance $G_{CS}$ | | 3.5 | | A/V | | |
| High-Side switch On Resistance $R_{DSONH}$ [2] | | 100 | | mΩ | | $I_{SW}$=0.2A&0.7A |
| Low-Side switch On Resistance $R_{DSONL}$ [2] | | 100 | | mΩ | | $I_{SW}$=-0.2A&-0.7A |
| High-Side switch Leakage Current | | 0.1 | 10 | µA | | $V_{IN}$=18V, $V_{EN}$=0V, $V_{SW}$=0V |
| High-Side Switch Current Limit | 2.7 | 3.5 | | A | | |
| Low-Side Switch Current Limit | | 0 | | A | | Drain to Source |
| Oscillator Frequency $F_{OSC1}$ | 280 | 340 | 400 | kHz | | |
| Short Circuit Oscillator Frequency $F_{OSC2}$ | | 90 | | kHz | | |
| Maximum Duty Cycle $D_{MAX}$ | | 90 | | % | | $V_{FB}$=0.85V |
| Minimum Duty Cycle $D_{MIN}$ | | | 0 | % | | $V_{FB}$=1V |
| Minimum Start-up Current | | 10 | | mA | | $V_{IN}$≤4.75V |
| Minimum No Load Start-up Voltage | | 5 | | V | | $I_{OUT}$=0A |
| Minimum Full Load Start-up Voltage | | 4.75 | | V | | $I_{OUT}$=2A |

| Parameter | Min. | Typ. | Max. | Units | | Conditions |
|---|---|---|---|---|---|---|
| EN Shutdown Threshold | 1.1 | 1.5 | 2 | V | | |
| EN Shutdown Hysteresis[1] | | 0.35 | | | | |
| EN Lockout Threshold | 2.2 | 2.5 | 2.7 | V | | |
| EN Lockout Hysteresis | | 0.21 | | | | |
| UVLO Threshold | 3.65 | 4.00 | 4.25 | V | | $V_{IN}$ Rising |
| UVLO Hysteresis | | 0.20 | | V | | |
| Soft-start Current | | 5 | | µA | | |
| Soft-start Time[1] | | 15 | | ms | | $C_{SS}$=0.1µF, $I_{OUT}$=500mA |
| Thermal Shutdown[1] | | 160 | | °C | | |
| Thermal Shutdown Hysteresis[1] | | 30 | | °C | | |

Note 1: Guaranteed by design.
Note 2: $R_{DSON}=(V_{SW1}-V_{SW2})/(I_{SW1}-I_{SW2})$

The product (or products) mentioned in this data sheet are no longer being manufactured and may not be ordered (OBS)

## BLOCK DIAGRAM

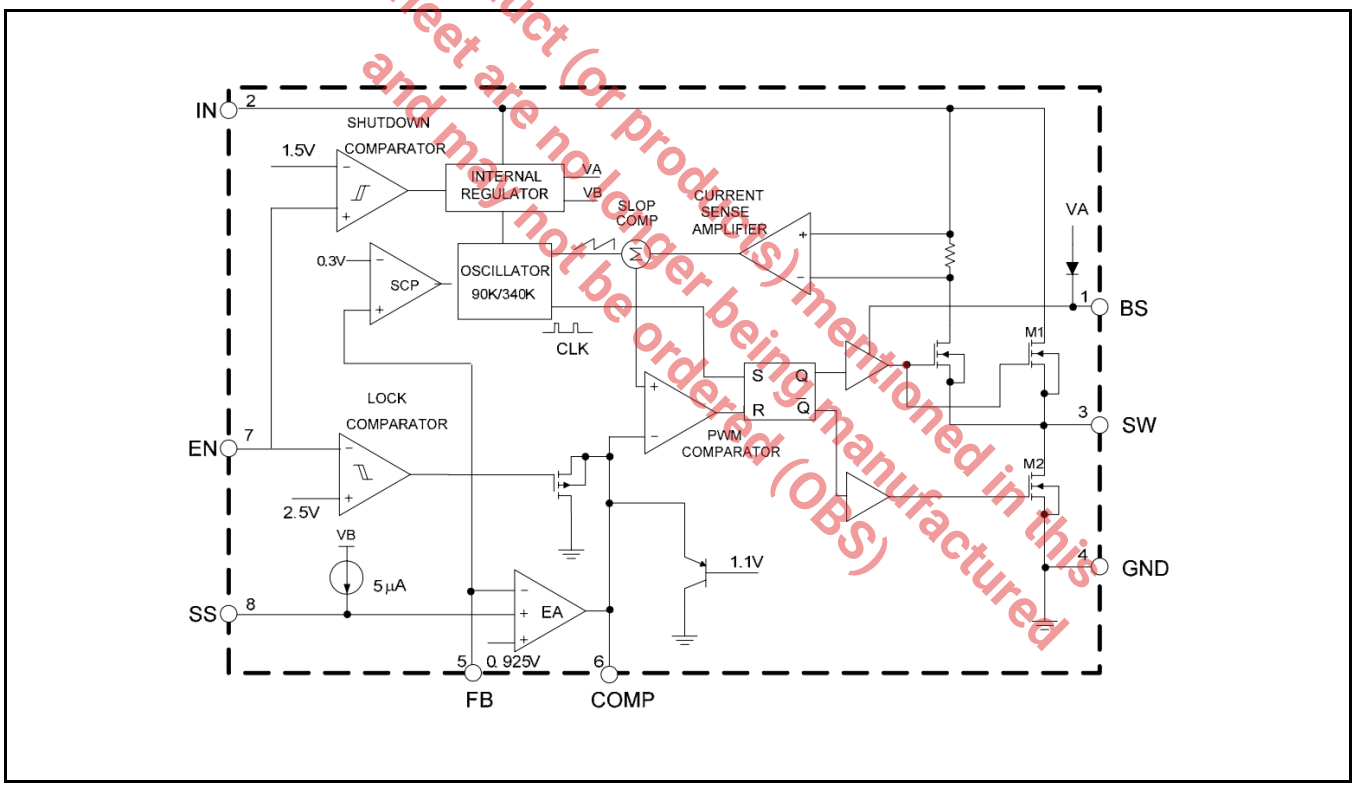


Fig. 2: XRP7674 Block Diagram

## PIN ASSIGNMENT

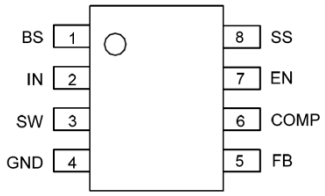


Fig. 3: XRP7674 Pin Assignment (SOIC-8)

The product (or products) mentioned in this data sheet are no longer being manufactured and may not be ordered (OBS)

## PIN DESCRIPTION

| Name | Pin Number | Description |
|---|---|---|
| BS | 1 | Bootstrap pin.<br>Connect a 0.01µF or greater bootstrap capacitor between the BS pin and the SW pin. The voltage across the bootstrap capacitor drives the internal high-side power MOSFET. |
| IN | 2 | Power input pin.<br>A capacitor should be connected between the IN pin and GND pin to keep the input voltage constant. |
| SW | 3 | Power switch output pin.<br>This pin is connected to the inductor and the bootstrap capacitor. |
| GND | 4 | Ground pin. |
| FB | 5 | Feedback pin.<br>An external resistor divider connected to FB programs the output voltage. If the feedback pin exceeds 1.1V the over-voltage protection will trigger. If the feedback voltage drops below 0.3V the oscillator frequency is lowered to achieve short-circuit protection. |
| COMP | 6 | Compensation pin.<br>This is the output of transconductance error amplifier and the input to the current comparator. It is used to compensate the control loop. Connect an RC network form this pin to GND. |
| EN | 7 | Control input pin.<br>Drive EN high/low in order to turn on/off the regulator. When the IC is in shutdown mode all functions are disabled to decrease the supply current below 1µA. This input can be connected to VIN (pin 2) through a 100kΩ resistor for automatic startup operations. |
| SS | 8 | Soft-start control input pin.<br>Connect a capacitor from SS to GND to set the soft-start period. A 0.1µF capacitor sets the soft start period to 15ms. To disable the soft-start feature, leave SS unconnected. |

## ORDERING INFORMATION

| Part Number | Temperature Range | Marking | Package | Packing Quantity | Note 1 | Note 2 |
|---|---|---|---|---|---|---|
| XRP7674IDTR-F | -40°C≤$T_A$≤+85°C | XRP7674I<br>YYWWF<br>X | SOIC-8 | 2.5K/Tape & Reel | RoHS Compliant<br>Halogen Free | |
| XRP7674EVB | XRP7674 Evaluation Board | | | | | |

"YY" = Year – "WW" = Work Week – "X" = Lot Number; when applicable.

## TYPICAL PERFORMANCE CHARACTERISTICS

All data taken at $V_{IN}$ = 12V, $V_{OUT}$=3.3V, $T_J$ = $T_A$ = 25°C, unless otherwise specified - Schematic and BOM from Application Information section of this datasheet.

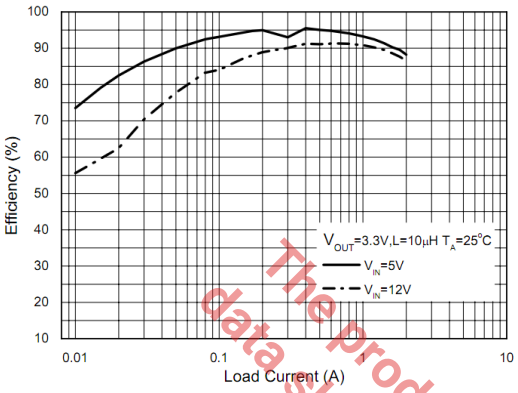


Fig. 4: Efficiency versus output current

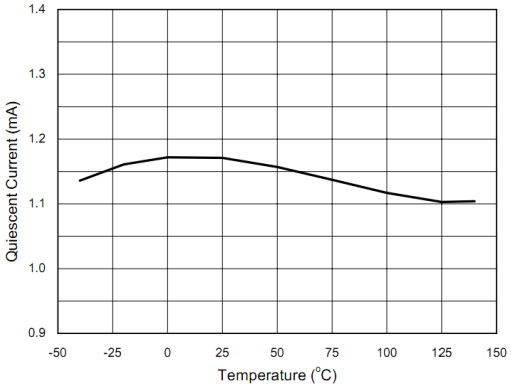


Fig. 5: Quiescent current versus temperature

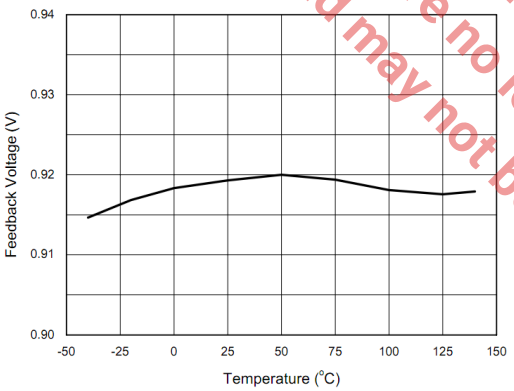


Fig. 6: Feedback voltage versus temperature

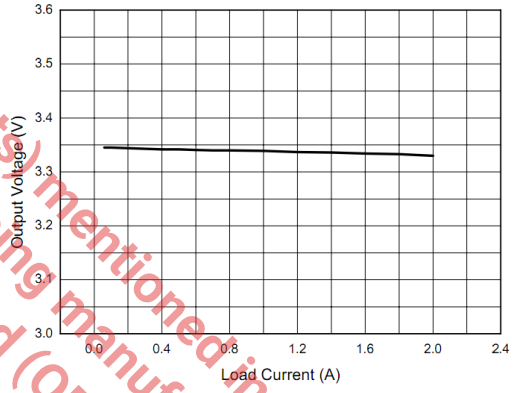


Fig. 7: Output voltage versus load current

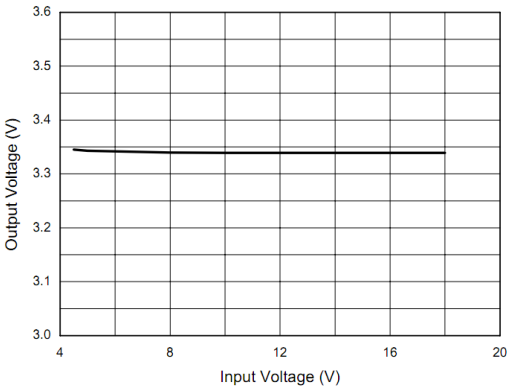


Fig. 8: Output voltage versus input voltage

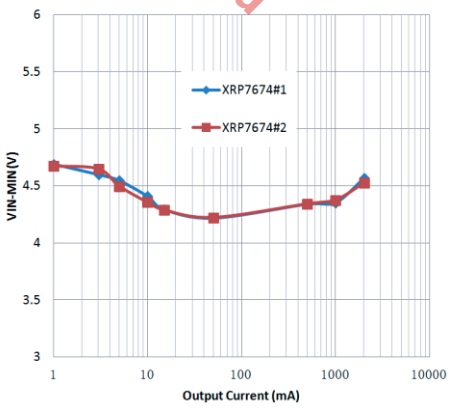


Fig. 9: Minimum Start-Up Voltage vs Output Current

The product (or products) mentioned in this data sheet are no longer being manufactured and may not be ordered (OBS)

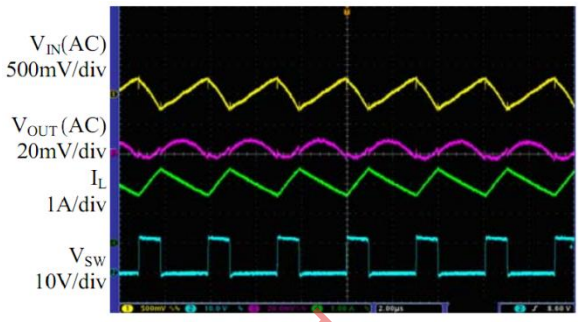


Fig. 10: Output voltage ripple
$I_{OUT}$=2A

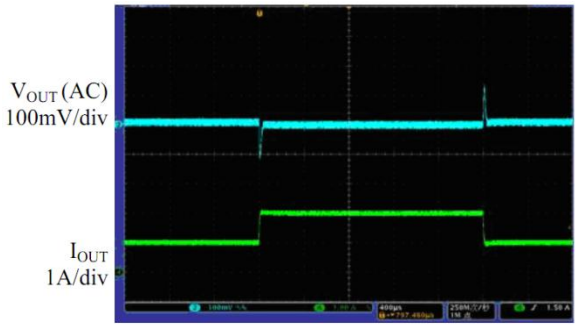


Fig. 11: Load transient
$I_{OUT}$=1A to 2A

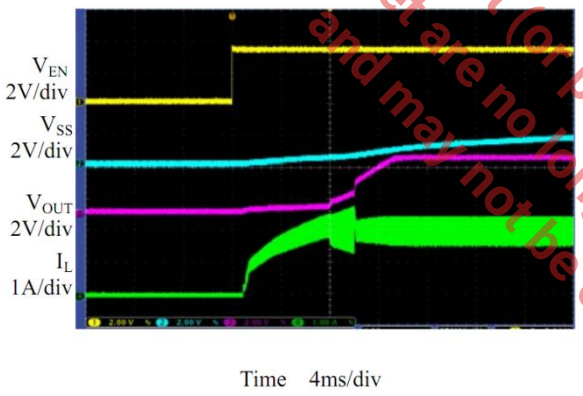


Fig. 12: Enable turn on Characteristics
$V_{IN}$=12V, $V_{EN}$=3.3V, $V_{OUT}$=3.3V, $I_{OUT}$=2A

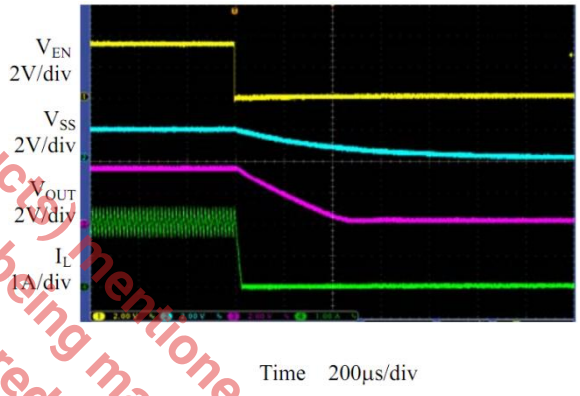


Fig. 13: Enable turn off
$V_{IN}$=12V, $V_{EN}$=3.3V, $V_{OUT}$=3.3V, $I_{OUT}$=2A

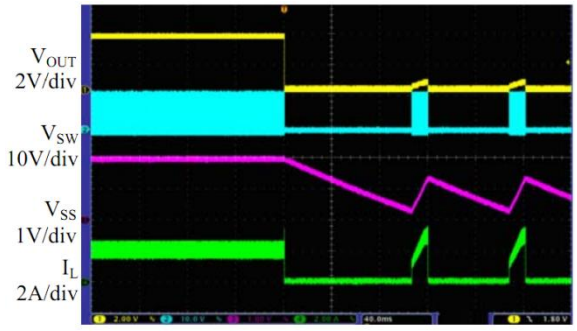


Fig. 14: Short-circuit protection
$I_{OUT}$=2A

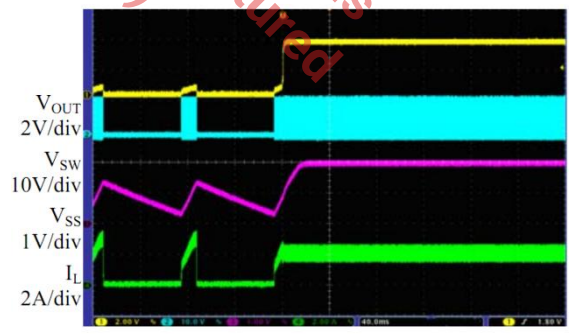


Fig. 15: Short-circuit recovery
$I_{OUT}$=2A

The product (or products) mentioned in this data sheet are no longer being manufactured and may not be ordered (OBS)

## THEORY OF OPERATION

### FUNCTIONAL DESCRIPTION

The XRP7674 is a synchronous, current-mode, step-down regulator with light-load efficiency. The light-load efficiency is achieved by monitoring the current through M2 and turning it off when current drops below 0A. The XRP7674 regulates input voltages from 4.5V to 18V and supplies up to 2A of load current. It uses current-mode control to regulate the output voltage. The output voltage is measured at FB through a resistive voltage divider and input to a transconductance error amplifier. The high-side switch current is compared to the output of the error amplifier to control the output voltage. The regulator utilizes internal N-channel MOSFETs to step-down the input voltage. A bootstrapping capacitor connected between BS and SW acts as a supply for high-side MOSFET. This capacitor is charged from the internal 5V supply when SW node is low. The XRP7674 has several powerful protection features including OCP, OVP, OTP, UVLO and output short-circuit.

#### PROGRAMMABLE SOFT-START

The soft-start time is fully programmable via CSS capacitor, placed between the SS and GND pin. The CSS is charged by a 5µA constant-current source, generating a ramp signal fed into non-inverting input of the error amplifier. This ramp regulates the voltage on comp pin during the regulator startup, thus realizing soft-start. Calculate the required CSS from:

$$CSS \approx tss \times \frac{5\mu A}{V_{FB}}$$

Where:

tss is the required soft-start time

$V_{FB}$ is the feedback voltage (0.925V nominal)

Please note that the above is a simplified equation and will provide an approximate CSS value. For a required soft-start, a more accurate CSS can be determined based on empirical data.

#### OVERCURRENT PROTECTION AND HICCUP MODE

The OCP protects against accidental increase in load current or a short circuit. The current of internal switch M1 is monitored. If this current exceeds 3.5A typical then a hiccup mode is triggered. In hiccup mode, internal power FETs are turned off and the SS pin is discharged. When SS reaches 0.2V a softstart is initiated. The regulator will stay in hiccup mode until overcurrent is removed. Note that when the soft start pin is below approximately 0.5V the regulator switching frequency is 90kHz.

#### OVERVOLTAGE PROTECTION OVP

The XRP7674 has internal OVP. When $V_{OUT}$ exceeds the OVP threshold (when $V_{FB}$ exceeds 1.1V) the power switching will be turned off. The XRP7674 will restart when overvoltage condition is removed.

#### OVER-TEMPERATURE PROTECTION OTP

If the junction temperature exceeds 160°C the OTP circuit is triggered, turning off the internal control circuit and switched M1 and M2. When junction temperature drops below 130°C the XRP7674 will restart.

The Product (or products) mentioned in this data sheet are no longer being manufactured and may not be ordered (OBS)

## APPLICATION INFORMATION

### SETTING THE OUTPUT VOLTAGE

Use an external resistor divider to set the output voltage. Program the output voltage from:

$$R1 = R2 \times \left(\frac{V_{OUT}}{0.925V} - 1\right)$$

Where:

R1 is the resistor between $V_{OUT}$ and FB

R2 is the resistor between FB and GND (nominally 10kΩ)

0.925V is the nominal feedback voltage.

### OUTPUT INDUCTOR

Select the output inductor for inductance L, DC current rating $I_{DC}$ and saturation current rating $I_{SAT}$. $I_{DC}$ should be larger than regulator output current. $I_{SAT}$, as a rule of thumb, should be 50% higher than the regulator output current. Since the regulator is rated at 2A then $I_{DC}$≥2A and $I_{SAT}$≥3A. Calculate the inductance from:

$$L = (V_{IN} - V_{OUT})\left(\frac{V_{OUT}}{\Delta I_L \times f_s \times V_{IN}}\right)$$

Where:

$\Delta I_L$ is peak-to-peak inductor current ripple nominally set to 30%-40% of $I_{OUT}$

$f_S$ is nominal switching frequency (340kHz)

As an example, inductor values for several common output voltages are shown in tables 1 and 2.

| VOUT(V) | $\Delta I_{L(p-p)}$(A) | L(µH) | Inductor Example |
|---|---|---|---|
| 5.0 | 0.86 | 10 | DR74-100-R |
| 3.3 | 0.70 | 10 | DR74-100-R |
| 2.5 | 0.70 | 8.2 | DR74-8R2-R |
| 1.8 | 0.66 | 6.8 | DR74-6R8-R |
| 1.5 | 0.57 | 6.8 | DR74-6R8-R |
| 1.2 | 0.68 | 4.7 | DR74-4R7-R |

Table 1: Suggested inductor values for VIN=12V and IOUT=2A

| VOUT(V) | $\Delta I_{L(p-p)}$(A) | L(µH) | Inductor Example |
|---|---|---|---|
| 3.3 | 0.70 | 4.7 | DR74-4R7-R |
| 2.5 | 0.78 | 4.7 | DR74-4R7-R |
| 1.8 | 0.72 | 4.7 | DR74-4R7-R |
| 1.5 | 0.66 | 4.7 | DR74-4R7-R |
| 1.2 | 0.57 | 4.7 | DR74-4R7-R |

Table 2: Suggested inductor values for VIN=5V and IOUT=2A

### OUTPUT CAPACITOR $C_{OUT}$

Select the output capacitor for voltage rating, capacitance $C_{OUT}$ and Equivalent Series Resistance ESR. The voltage rating, as a rule of thumb, should be at least twice the output voltage. When calculating the required capacitance, usually the overriding requirement is current load-step transient. If the unloading transient (i.e., when load transitions from a high to a low current) is met, then usually the loading transient (when load transitions from a low to a high current) is met as well. Therefore calculate the $C_{OUT}$ based on the unloading transient requirement from:

$$C_{OUT} = L \times \left(\frac{{I_{High}}^2 - {I_{Low}}^2}{(V_{OUT} + V_{transient})^2 - {V_{OUT}}^2}\right)$$

Where:

L is the inductance calculated in the preceding step

$I_{High}$ is the value of load-step prior to unloading. This is nominally set equal to regulator current rating (2A).

$I_{Low}$ is the value of load-step after unloading. This is nominally set equal to 50% of regulator current rating (1A).

$V_{transient}$ is the maximum permissible voltage transient corresponding to the load step mentioned above. $V_{transient}$ is typically specified from 3% to 5% of $V_{OUT}$.

ESR of the capacitor has to be selected such that the output voltage ripple requirement $\Delta V_{OUT}$, nominally 1% of $V_{OUT}$, is met. Voltage ripple $\Delta V_{OUT}$ is mainly composed of two components: the resistive ripple due to ESR and capacitive ripple due to $C_{OUT}$ charge transfer. For applications requiring low voltage ripple, ceramic capacitors are recommended

The product (or products) mentioned in this data sheet are no longer being manufactured and may not be ordered (OBS)

because of their low ESR which is typically in the range of 5mΩ. Therefore $\Delta V_{OUT}$ is mainly capacitive. For ceramic capacitors calculate the $\Delta V_{OUT}$ from:

$$\Delta V_{OUT} = \frac{\Delta I_L}{8 \times C_{OUT} \times f_s}$$

Where:

$\Delta I_L$ is from table 1 or 2 in previous section

$C_{OUT}$ is the value calculated above

$f_s$ is nominal switching frequency (340kHz)

If tantalum or electrolytic capacitors are used then $\Delta V_{OUT}$ is essentially a function of ESR:

$$\Delta V_{OUT} = \Delta I_L \times ESR$$

### INPUT CAPACITOR $C_{IN}$

Select the input capacitor for voltage rating, RMS current rating and capacitance. The voltage rating should be at least 50% higher than the regulator's maximum input voltage. Calculate the capacitor's current rating from:

$$I_{CIN,RMS} = I_{OUT} \times \sqrt{D \times (1 - D)}$$

Where:

$I_{OUT}$ is regulator's maximum current (2A)

D is duty cycle ($D=V_{OUT}/V_{IN}$)

Calculate the $C_{IN}$ capacitance from:

$$C_{IN} = \frac{I_{OUT} \times V_{OUT} \times (V_{IN} - V_{OUT})}{f_s \times {V_{IN}}^2 \times \Delta V_{IN}}$$

Where:

$\Delta V_{IN}$ is the permissible input voltage ripple, nominally set at 1% of $V_{IN}$

### OPTIONAL SCHOTTKY DIODE

An optional Schottky diode may be paralleled between the GND pin and SW pin to improve the regulator efficiency. See Table 3.

| Part Number | Voltage/Current Rating | Vendor |
|---|---|---|
| B130 | 30V/1A | Diodes, Inc. |
| SK13 | 30V/1A | Diodes, Inc. |
| MBRS130 | 30V/1A | International Rectifier |

Table 3: Optional Schottky diode

### EXTERNAL BOOTSTRAP DIODE

A low-cost diode, such as 1N4148, may provide higher efficiency when the input voltage is 5V or the output is 5V or 3.3V. Circuit configuration is shown in figures 16 and 17. The external bootstrap diode is also recommended where duty cycle ($V_{OUT}/V_{IN}$) is larger than 65%.

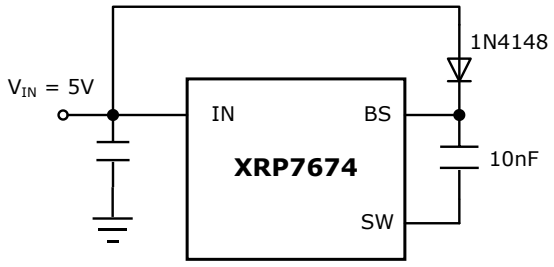


Fig. 16: Optional external bootstrap diode where input voltage is fixed 5V

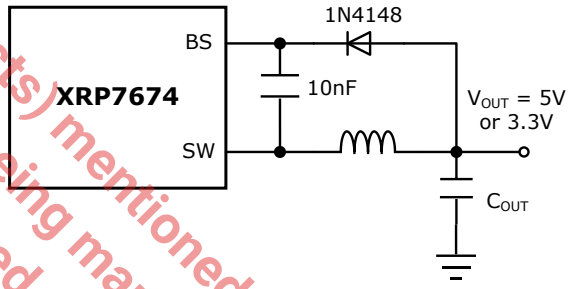


Fig. 17: Optional external bootstrap diode where output voltage is 5V or 3.3V

### LOOP COMPENSATION

XRP7674 utilizes current-mode control. This allows using a minimum of external components to compensate the regulator. In general only two components are needed: RC and CC. Proper compensation of the regulator (determining RC and CC) results in optimum transient response. In terms of power supply control theory, the goals of compensation are to choose RC and CC such that the regulator loop gain has a crossover frequency fc between 15kHz and 34kHz. The corresponding phase-margin should be between 45 degrees and 65 degrees. An important characteristic of current-mode buck regulator is its dominant pole. The frequency of the dominant pole is given by:

The product (or products) mentioned in this data sheet are no longer being manufactured and may not be ordered (OBS)

$$f_p = \frac{1}{2\pi \times C_{OUT} \times R_{load}}$$

where $R_{load}$ is the output load resistance.

The uncompensated regulator has a constant gain up to its pole frequency, beyond which the gain decreases at -20dB/decade. The zero arising from the output capacitor's ESR is inconsequential if ceramic $C_{OUT}$ is used. This simplifies the compensation. The RC and CC, which are placed between the output of XRP7674's Error Amplifier and ground, constitute a zero. The frequency of this compensating zero is given by:

$$f_z = \frac{1}{2\pi \times RC \times CC}$$

For the typical application circuit, RC=13kΩ and CC=4.7nF provide a satisfactory compensation. The XRP7674 can also be used as a pin to pin upgrade replacement for XRP7664 based designs; in this instance, the recommended RC network for XRP7664, RC=5.6k and CC=3.3nF, can be used with satisfactory results with the XRP7674. Please contact EXAR if you need assistance with the compensation of your particular circuit.

The product (or products) mentioned in this data sheet are no longer being manufactured and may not be ordered (OBS)

## TYPICAL APPLICATIONS

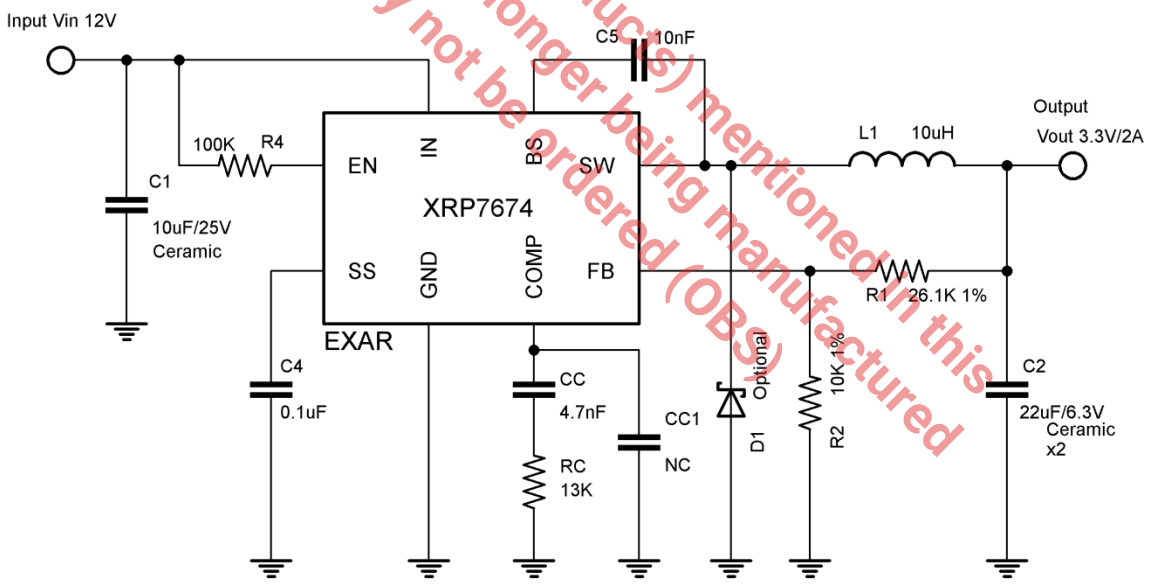


Fig. 18: XRP7674 Typical Application Diagram - 12V to 3.3V Conversion

## PACKAGE SPECIFICATION

### 8-PIN SOIC

Unit: mm (inch)

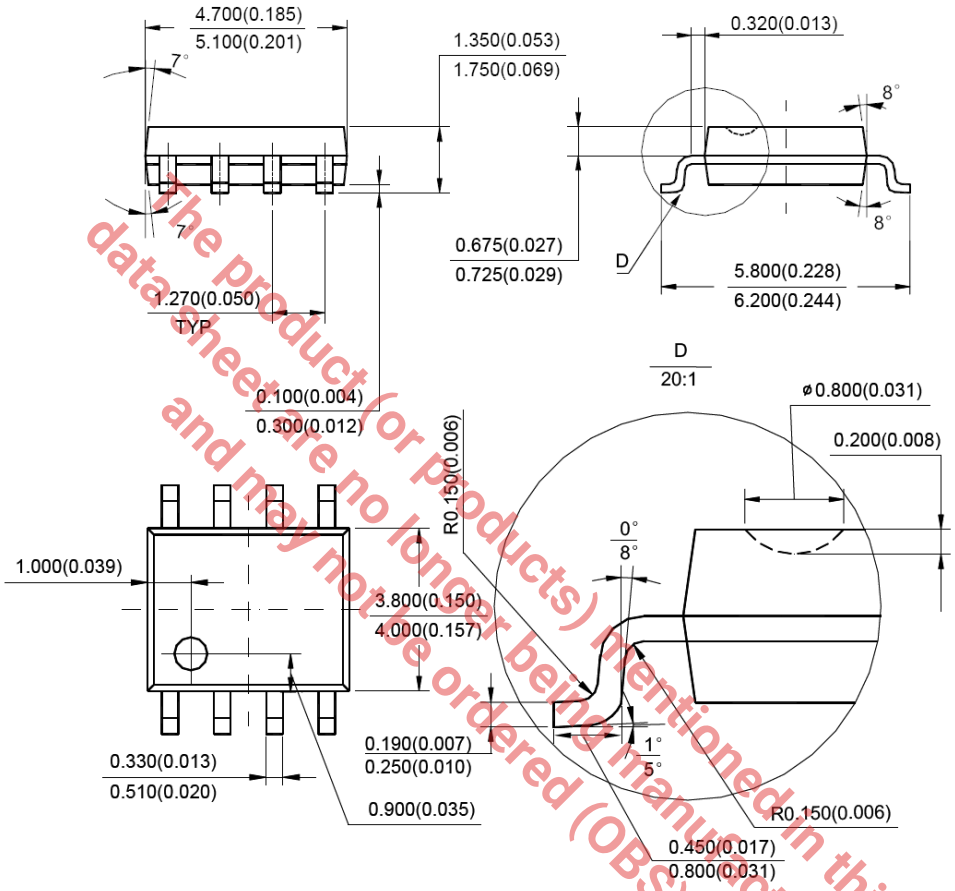


The product (or products) mentioned in this datasheet are no longer being manufactured and may not be ordered (OBS)

## REVISION HISTORY

| Revision | Date | Description |
|---|---|---|
| 1.0.0 | 02/28/2013 | Initial release of datasheet |
| | | |
| | | |

The product (or products) mentioned in this data sheet are no longer being manufactured and may not be ordered (OBS)

## FOR FURTHER ASSISTANCE

Email: customersupport@exar.com

powertechsupport@exar.com

Exar Technical Documentation: http://www.exar.com/TechDoc/default.aspx?

**EXAR CORPORATION**

**HEADQUARTERS AND SALES OFFICES**

48720 Kato Road

Fremont, CA 94538 – USA

Tel.: +1 (510) 668-7000

Fax: +1 (510) 668-7030

www.exar.com

## NOTICE

EXAR Corporation reserves the right to make changes to the products contained in this publication in order to improve design, performance or reliability. EXAR Corporation assumes no responsibility for the use of any circuits described herein, conveys no license under any patent or other right, and makes no representation that the circuits are free of patent infringement. Charts and schedules contained here in are only for illustration purposes and may vary depending upon a user's specific application. While the information in this publication has been carefully checked; no responsibility, however, is assumed for inaccuracies.

EXAR Corporation does not recommend the use of any of its products in life support applications where the failure or malfunction of the product can reasonably be expected to cause failure of the life support system or to significantly affect its safety or effectiveness. Products are not authorized for use in such applications unless EXAR Corporation receives, in writing, assurances to its satisfaction that: (a) the risk of injury or damage has been minimized; (b) the user assumes all such risks; (c) potential liability of EXAR Corporation is adequately protected under the circumstances.

Reproduction, in part or whole, without the prior written consent of EXAR Corporation is prohibited.