3A 300kHz-2.5MHz Synchronous Step Down Regulator

November 2019 Rev. 1.0.2

GENERAL DESCRIPTION

The XRP6670 is a synchronous current mode PWM step-down (buck) regulator capable of delivering up to 3 Amps. A 2.6V to 5.5V input voltage range allows for single supply operation from industry standard 3.3V and 5V power rails.

Based on a current mode PWM control scheme, the XRP6670 operating frequency is programmable between 300kHz and 2.5MHz via an external resistor. This flexibility allows the XRP6670 to optimize component selection and reduce component count and solution footprint. It provides a low output voltage ripple, excellent line and load regulation and has a 100% duty cycle LDO mode. Output voltage is adjustable to as low as 0.8V with a better than 2% accuracy while a low quiescent current supports the most stringent battery operating conditions.

Built-in over-temperature, overcurrent, short circuit and under-voltage lock-out protections insure safe operations under abnormal operating conditions.

The XRP6670 is offered in a RoHS compliant, "green"/halogen free 3mmx3mm 10-pin DFN package.

APPLICATIONS

- **Industrial & Medical Equipment**
- **Audio-Video Equipment**
- **Networking & Telecom Equipment**
- **Portable/Battery Operated Equipment**

FEATURES

- **Guaranteed 3A Output Current**
  - Input Voltage: 2.6V to 5.5V
- **Prog. PWM Current Mode Control**
  - Programmable 300kHz to 2.5MHz
  - 100% Duty Cycle LDO Mode Operation
  - Achieves 95% Efficiency
- **Adjustable Output Voltage Range**
  - 0.8V to 5V with ±2% Accuracy
- **Enable and Power Good Functions**
- **460µA Quiescent Current**
- **Over-temperature, Over-current, Short-circuit and UVLO Protections**
- **RoHS Compliant "Green"/Halogen Free 3mm x 3mm 10-Pin DFN Package**

The product (or products) mentioned in this data sheet are no longer being manufactured and may not be ordered (OBS)

TYPICAL APPLICATION DIAGRAM

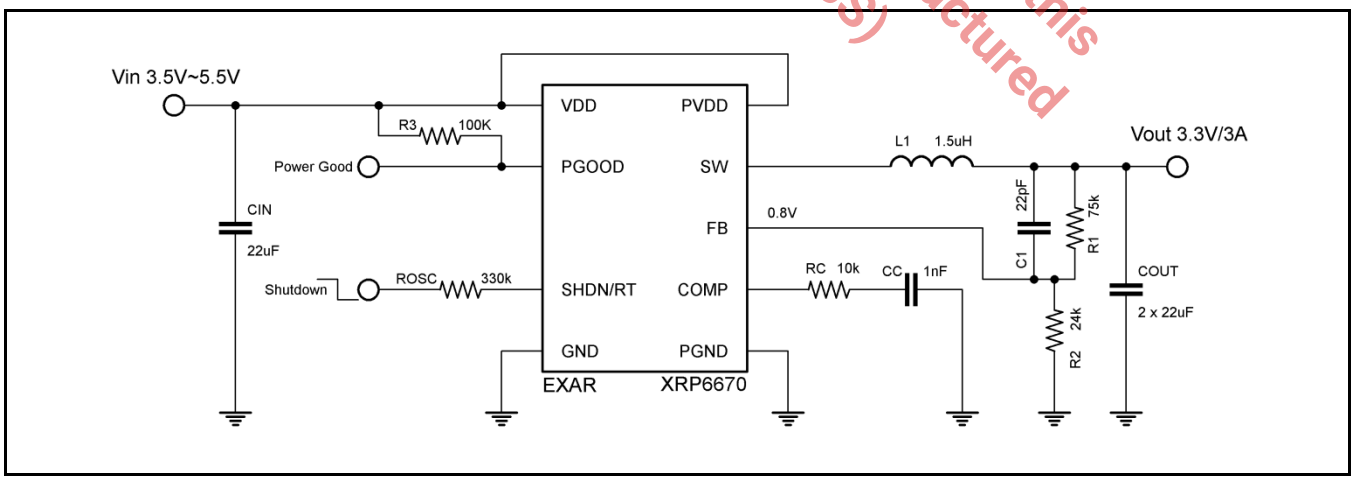

Fig. 1: XRP6670 Application Diagram

ABSOLUTE MAXIMUM RATINGS

These are stress ratings only and functional operation of the device at these ratings or any other above those indicated in the operation sections of the specifications below is not implied. Exposure to absolute maximum rating conditions for extended periods of time may affect reliability.

V_{DD}, PV_{DD}, FB, COMP, SHDN/RT ..... -0.3V to 6.0V
SW ..... -0.3V to V_{DD}+0.3V
Junction Temperature Range..... +150°C
Storage Temperature..... -65°C to 150°C
Power Dissipation ..... Internally Limited
Lead Temperature (Soldering, 10 sec) ..... 260°C
ESD Rating (HBM - Human Body Model) 2kV
ESD Rating (MM - Machine Model) 200V

OPERATING RATINGS

Input Voltage Range V_{IN}.....2.6V to 5.5V
Maximum Output Current (Min.) 3A
Junction Temperature Range ..... -40°C to +125°C
Thermal Resistance .....
DFN10 θ_{JA} .....110°C/W
DFN10 θ_{JC} ..... 3°C/W

Note 1: T_J is a function of the ambient temperature T_A and power dissipation P_D: ($T_J = T_A + (P_D * \theta_{JA})$)

The product(s) mentioned in this data sheet are no longer being manufactured and may not be ordered (OBS)

ELECTRICAL SPECIFICATIONS

Specifications are for an Operating Junction Temperature of $T_A = T_J = 25°C$ only; limits applying over the full Operating Junction Temperature range are denoted by a "•". Minimum and Maximum limits are guaranteed through test, design, or statistical correlation. Typical values represent the most likely parametric norm at $T_J = 25°C$, and are provided for reference purposes only. Unless otherwise indicated, $V_{DD} = V_{PVDD} = 3.3V$, $T_A = T_J = 25°C$.

Parameter	Min.	Typ.	Max.	Units		Conditions
Supply Current		460		µA		V_{FB}=0.75V, No switching
Shutdown Supply Current			1	µA		SHDN/RT=V_{DD}=V_{PVDD}=5.5V
Under Voltage Lockout (UVLO) Threshold		2.2		V		V_{DD} rising
Under Voltage Lockout (UVLO) Hysteresis		300		mV		
Feedback Voltage V_{FB}	0.784	0.800	0.816	V		
FB Pin Bias Current		0.1	0.4	µA		
Current Sense Transresistance		0.2		Ω		
Switching Leakage Current			1	µA		SHDN/RT=V_{DD}=5.5V
Error Amplifier Voltage Gain		800		V/V		
Error Amplifier Trans-conductance		800		µA/V		
RT Pin Voltage	0.760	0.800	0.840	V		
Switching Frequency Range	0.3		2.5	MHz		Programmed via R_{OSC}
	0.8	1	1.2			R_{OSC}=330kΩ
Maximum Duty Cycle	100			%		V_{FB}=0.75V
Minimum On-Time		120	150	ns		
Switch Current Limit	3.2	4.2		A		V_{FB}=0.75V
Switching FET On Resistance		0.11	0.16	Ω		I_{SW}=500mA
Synchronous FET On Resistance		0.11	0.17	Ω		I_{SW}=500mA
Shutdown Threshold		V_{DD}-0.7	V_{DD}-0.4	V		
PGOOD Voltage Range	-15		+15	%		
PGOOD Pull Down Resistance			120	Ω		
Output Current	3			A		V_{DD}= 2.6V to 5.5V, V_{OUT}= 2.5V
Output Voltage Line Regulation		0.4		%/V		V_{DD}= 2.7V to 5.5V, I_{OUT}= 100mA
Output Voltage Load Regulation		±0.2		%		I_{OUT}= 10mA to 3A
Soft Start Time		1.5		ms		I_{OUT}= 10mA
Thermal Shutdown Temperature		160		°C		
Thermal Shutdown Hysteresis		20		°C		

BLOCK DIAGRAM

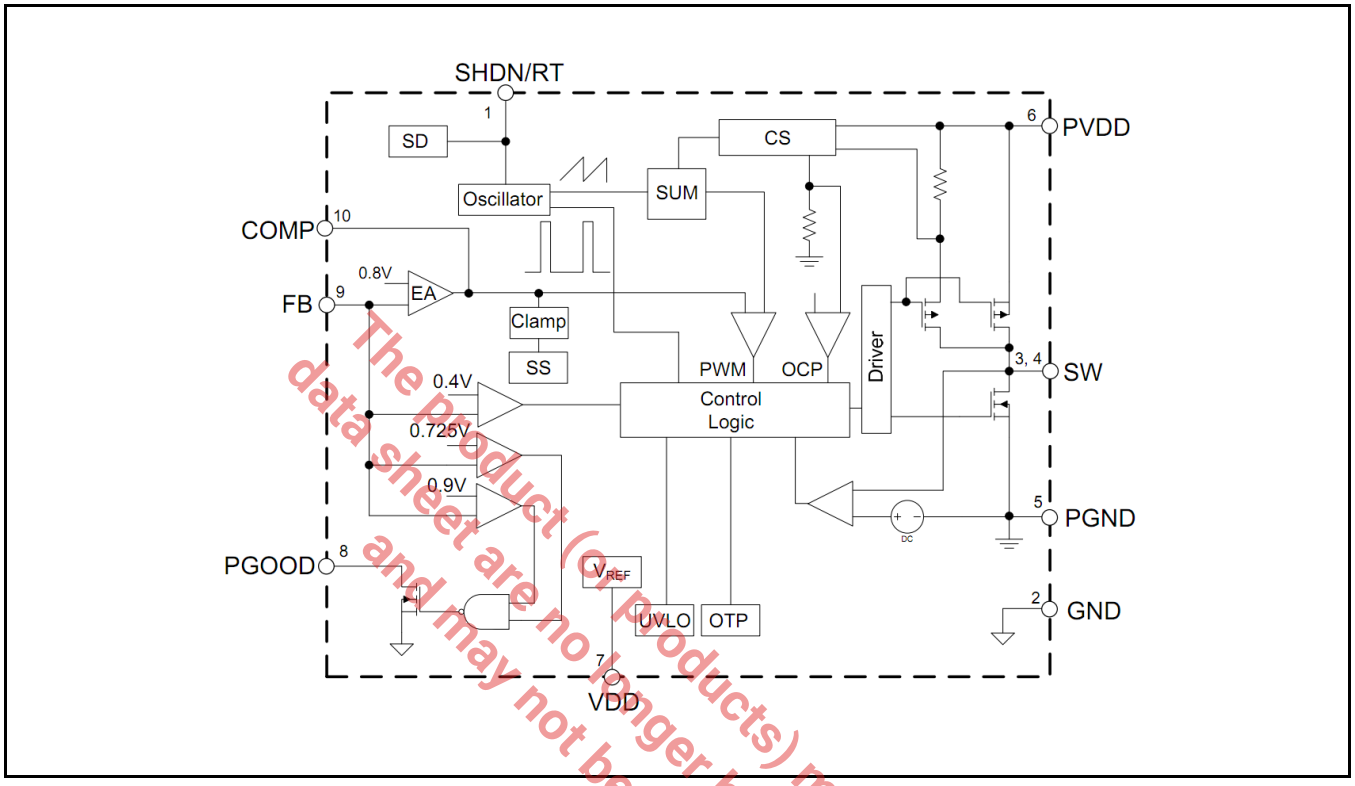

Fig. 2: XRP6670 Block Diagram

PIN ASSIGNMENT

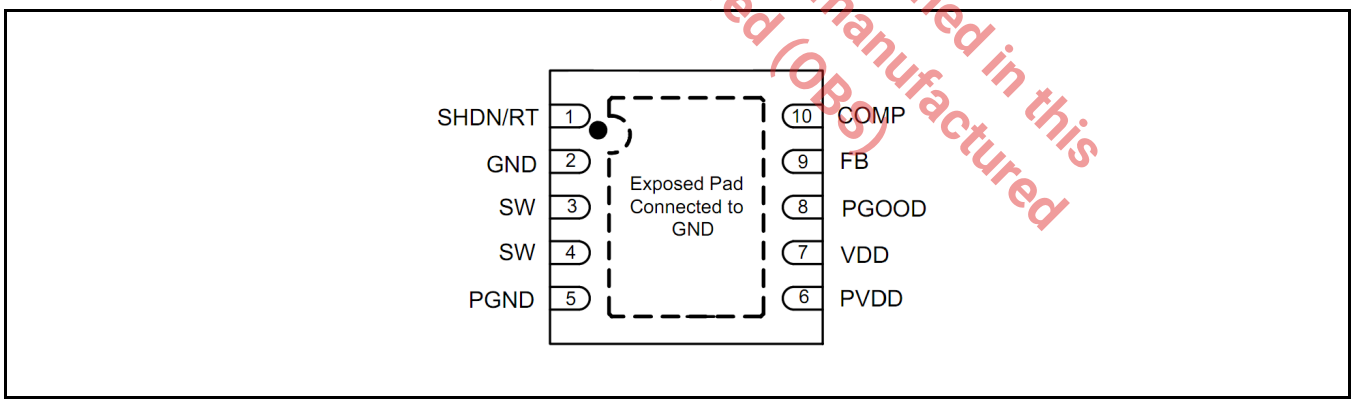

Fig. 3: XRP6670 Pin Assignment

The Product (or products) mentioned in this data sheet are no longer being manufactured and may not be ordered (OBS)

PIN DESCRIPTION

Name	Pin Number	Description
SHDN/RT	1	Shutdown and Oscillator resistor input. Connect a resistor to GND from this pin to set the switching frequency. Forcing this pin to VDD shuts down the device.
GND	2	Signal ground. All small-signal ground, such as the compensation components and exposed pad should be connected to this, which in turn connects to PGND at one point.
SW	3, 4	Power switch output pin. This pin is connected to the inductor.
PGND	5	Power Ground Signal. Connect this signal as close as possible to the input and output capacitors C_{IN} and C_{OUT}.
PVDD	6	Power Input Supply Pin. Decouple this pin to PGND (pin 5) with a capacitor.
VDD	7	Signal Input Supply Pin. Decouple this pin to GND (pin 2) with a capacitor. Typically, VDD and PVDD are connected together.
PGOOD	8	Power Good Flag. This is an open drain output and is pulled to ground if the output voltage is out of regulation.
FB	9	Feedback pin. An external resistor divider connected to FB programs the output voltage.
COMP	10	Compensation pin. This is the output of transconductance error amplifier and the input to the current comparator. It is used to compensate the control loop. Connect an RC network form this pin to GND.
Exp. Pad	Exp. Pad	Connect to GND signal (pin 2).

ORDERING INFORMATION(1)

Part Number	Junction Temperature Range	Package	Packing Method	Lead Free(2)
XRP6670EHTR-F	-40°C ≤ T_J ≤ +125°C	DFN10	Tape & Reel	Yes
XRP6670EVB	XRP6670 Evaluation Board			

Notes:

1. Refer to www.maxlinear.com/XRP6670 for most up-to-date Ordering Information.
2. Visit www.maxlinear.com for additional information on Environmental Rating.

The product(s) mentioned in this data sheet are no longer being manufactured and may not be ordered (OBS)

TYPICAL PERFORMANCE CHARACTERISTICS

All data taken at V_{IN} = V_{DD} = V_{PVDD} = 3.3V, T_J = T_A = 25°C, unless otherwise specified - Schematic and BOM from Application Information section of this datasheet.

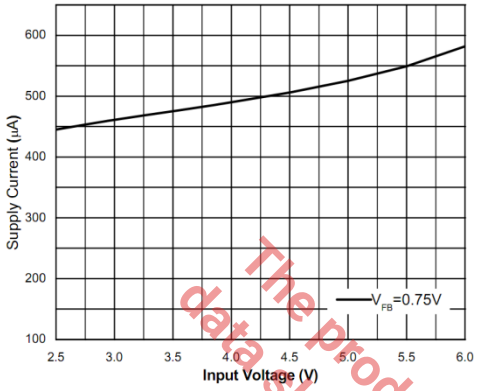

Fig. 4: Supply Current Versus Input Voltage

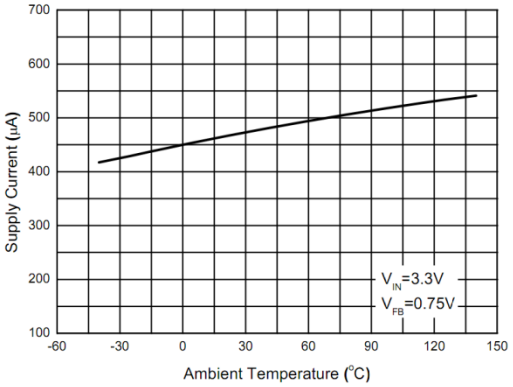

Fig. 5: Supply Current versus Ambient Temperature

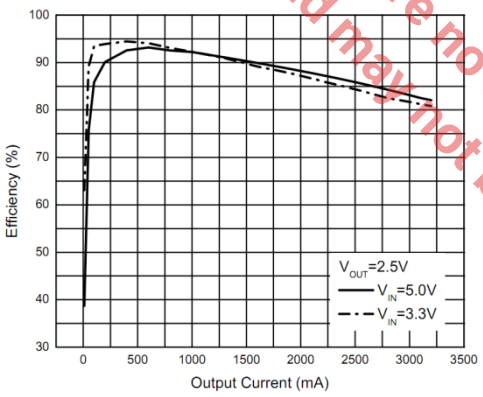

Fig. 6: Efficiency versus Output Current

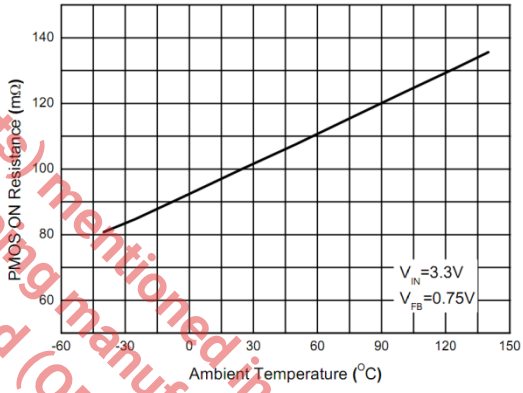

Fig. 7: PMOS RDS_{ON} Resistance versus Ambient Temperature

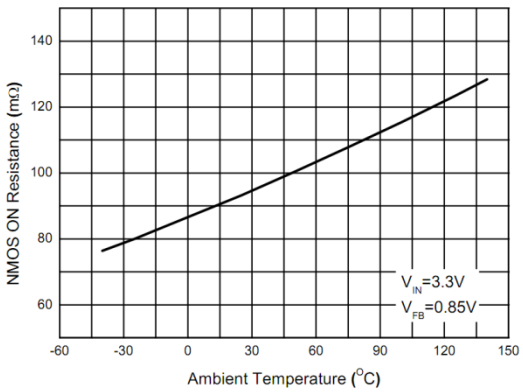

Fig. 8: NMOS RDS_{ON} Resistance versus Ambient Temperature

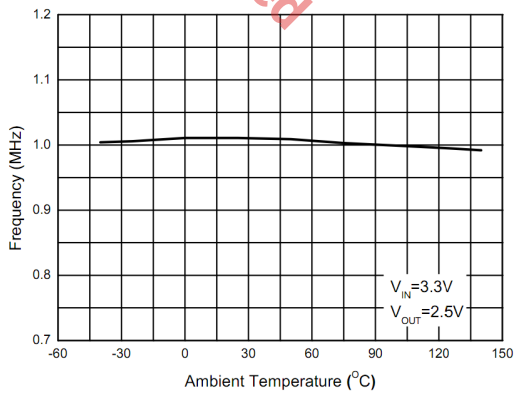

Fig. 9: Frequency versus Ambient Temperature

The product (or products) mentioned in this data sheet are no longer being manufactured and may not be ordered (OBS)

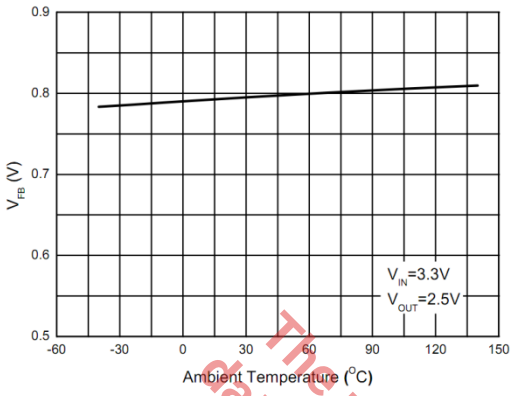

Fig. 10: V_{FB} versus Ambient Temperature

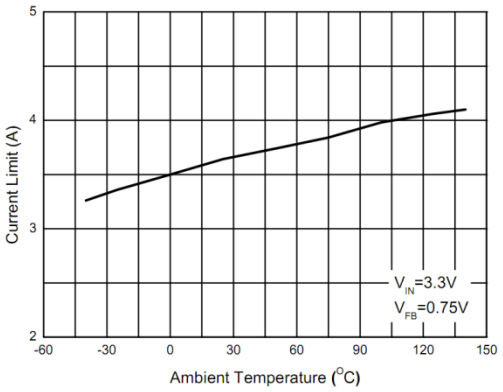

Fig. 11: Current Limit versus Ambient Temperature

The product (or products) mentioned in this data sheet are no longer being manufactured and may not be ordered (OBS)

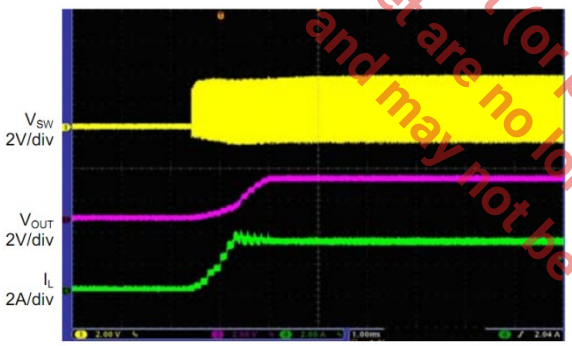

Fig. 12: Start-up from VIN
V_{IN}=3.3V, V_{OUT}=2.5V, I_{OUT}=3A

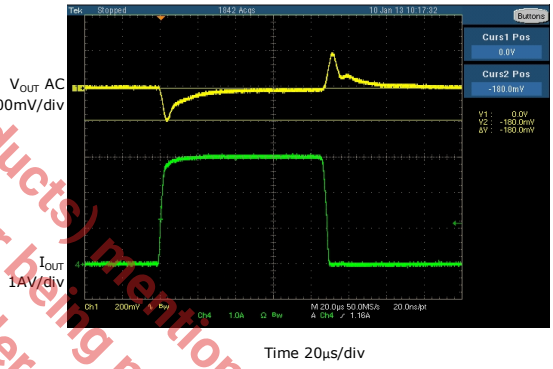

Fig. 13: Load Transient Response
V_{IN}=5V, V_{OUT}=2.5V, I_{OUT}=0A to 3A

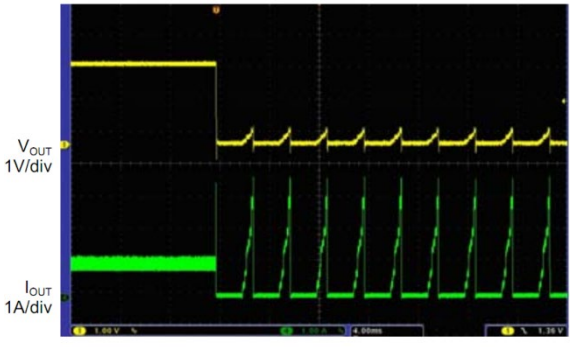

Fig. 14: Short Circuit Protection
V_{IN}=3.3V, V_{OUT}=2.5V

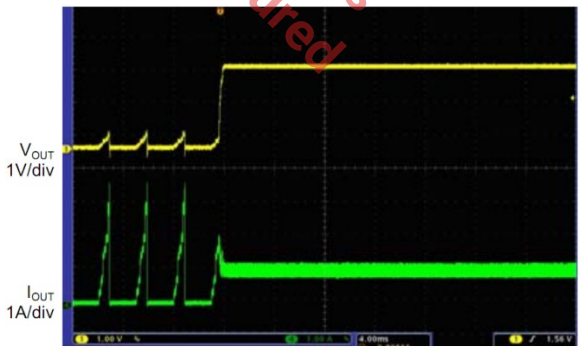

Fig. 15: Short Circuit Recovery
V_{IN}=3.3V, V_{OUT}=2.5V

THEORY OF OPERATION

FUNCTIONAL DESCRIPTION

The XRP6670 is a synchronous, current-mode, step-down regulator. It regulates input voltages from 2.6V to 5.5V and supplies up to 3A of output current I_{OUT}. The XRP6670 uses current-mode control to regulate the output voltage V_{OUT}. The V_{OUT} is measured at FB through a resistive voltage divider and input to a transconductance error amplifier. The high-side switch current is compared to the output of the error amplifier to control the output voltage. The regulator utilizes internal P-channel and N-channel MOSFETs to step-down the input voltage. Because the high-side FET is P-channel a bootstrapping capacitor is not necessary and the regulator can operate at 100% duty cycle. The XRP6670 has several powerful protection features including OCP, OTP, UVLO and output short-circuit.

SHORT-CIRCUIT AND OVER-CURRENT PROTECTION OCP

The XRP6670 protects itself and downstream circuits against accidental increase in current or short-circuit. If peak current through the switching FET increases above 4.2A (nominal) the regulator enters an idle state where the internal FETs are turned off and softstart is pulled low. After a period of 2000xT the regulator will attempt a softstart. If the high current persists the protection cycle will repeat.

SOFT-START

XRP6670 has an integrated soft-start which is preset at 1.5ms (nominal). This feature limits the inrush current during startup and allows the output voltage to smoothly rise to its programmed value.

POWER GOOD FLAG

This open drain output (PGOOD) can be used to monitor whether the output voltage is within regulation (±15%). PGOOD is pulled to ground when V_{OUT} is not in regulation. PGOOD should be tied to VDD with a 100k resistor.

PROGRAMMABLE FREQUENCY

The switching frequency is programmable within a range of 300kHz to 2.5MHz via a resistor placed between SHDN/RT and GND pins. An equation for calculating a resistor value for a target frequency is given the Application Information section.

100% DUTY CYCLE AND LDO OPERATION

The XRP6670 switching FET is a P-channel device and therefore can operate at 100% duty cycle. In battery operated applications where V_{IN} will droop, XRP6670 can seamlessly transition from PWM to LDO mode.

OVER-TEMPERATURE PROTECTION OTP

If the junction temperature exceeds 160°C the OTP circuit is triggered, turning off the internal control circuit and FETs. When junction temperature drops below 140°C the XRP6670 will restart.

Although thermal shutdown is built-in in the XRP6670 to protect the device from thermal damage, the total power dissipation that the XRP6670 can sustain is based on the package thermal capability. Equation 1 shown on page two, can be used to calculate junction temperature and ensure operation within the recommended maximum temperature of 125°C.

APPLICATION INFORMATION

PROGRAMMING THE OUTPUT VOLTAGE

Use an external resistor divider to set the output voltage based on the following equation:

$$R2 = \frac{R1}{\left(\frac{V_{OUT}}{0.800V} - 1\right)}$$

Where:

R1 is the resistor between V_{OUT} and FB (nominally set at 100kΩ)

The product (or products) mentioned in this data sheet are no longer being manufactured and may not be ordered (OPS)

R2 is the resistor between FB and GND

0.800V is the nominal feedback voltage

A resistor selection guide for common values of V_{OUT} is shown in table 1.

VOUT	R1(kΩ)	R2(kΩ)
1.1V	100	267
1.2V	100	200
1.5V	105	120
1.8V	120	95.3
2.5V	100	47
2.8V	75	30
3.3V	75	24

Table 1: Resistor Selection

PROGRAMMING THE FREQUENCY

Use resistor R_{OSC} between SHDN/RT and GND pins to program the switching frequency. A graph of nominal frequency versus R_{OSC} is shown in figure 16.

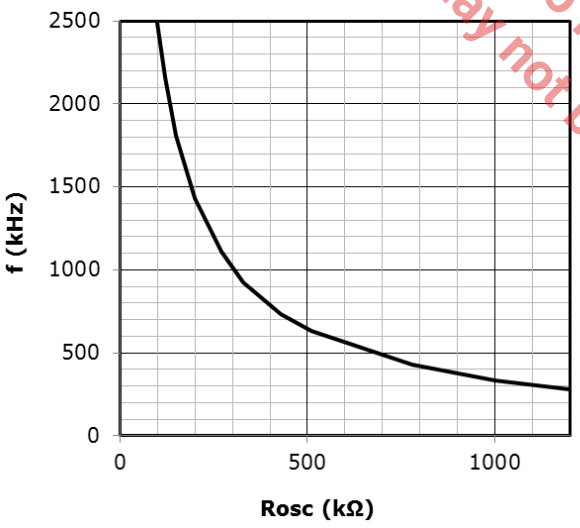

Fig. 16: Frequency versus R_{OSC}

The following equation closely fits the empirical data and can be used to select R_{OSC} for a given frequency.

$$R_{osc} = \frac{9.28 \times 10^{11}}{f^{1.084}}$$

DUTY-CYCLE LIMITATION

XRP6670 has a "Minimum On-Time" specification of 150ns which imposes a restriction on minimum duty-cycle (see table 2)

F (MHz)	T_{TYP}(ns)	T_{MIN}(ns)	Duty-cycle$_{MIN}$
1.0	1000	800	0.19
2.0	500	400	0.38

Table 2: Minimum duty-cycle arising from "Minimum On-Time)

For example if frequency is set at 2MHz then typical switching period is 500ns. Allowing a ±20% uncertainty, minimum period is 400ns and corresponding minimum duty-cycle is 0.38. Recall that for a buck regulator duty-cycle=V_{OUT}/V_{IN}. Therefore when operating at 2MHz with V_{IN} of 5V, a V_{OUT}≤1.9V is not possible (5V x 0.38 = 1.9V).

OUTPUT INDUCTOR

Select the output inductor for inductance L, DC current rating I_{DC} and saturation current rating I_{SAT}. I_{DC} should be larger than regulator output current. I_{SAT}, as a rule of thumb, should be 50% higher than the regulator output current. Since the regulator is rated at 3A then I_{DC}≥3A and I_{SAT}≥4.5A.

Please note that "Peak Switch Current" is rated at 3.2A minimum. Therefore applications that require an output current of 3A should limit the peak-to-peak inductor current ripple to ΔI_L≤0.4A. In the following we will use the common practice of ΔI_L≤1A. Therefore **worst-case** maximum output current will be limited to I_{OUT}=3.2A-0.5A=2.7A.

Calculate the inductance from:

$$L = (V_{IN} - V_{OUT})\left(\frac{V_{OUT}}{\Delta I_L \times f_s \times V_{IN}}\right)$$

Where:

ΔI_L is peak-to-peak inductor current ripple nominally set to ≤30% of I_{OUT}

f_S is nominal switching frequency

As an example, inductor values corresponding to 5V_{IN}/1MHz and 3.3V_{IN}/1MHz are shown in tables 3 and 4 for several common output

The product(s) mentioned in this data sheet are no longer being manufactured and may not be ordered (OBS)

voltages. Note that example inductors shown in tables 3 and 4 are Wurth shielded inductors.

VOUT(V)	$\Delta I_{L(p-p)}$(A)	L(µH)	Inductor Example
3.3	0.76	1.5	74437346015
2.8	0.81	1.5	74437346015
2.5	0.84	1.5	74437346015
1.8	0.76	1.5	74437346015
1.5	0.70	1.5	74437346015
1.2	0.62	1.5	74437346015
1.1	0.57	1.5	74437346015

Table 3: Suggested Inductor Values for f=1MHz, V_{IN}=5V and I_{OUT}=2.7A

VOUT(V)	$\Delta I_{L(p-p)}$(A)	L(µH)	Inductor Example
2.5	0.41	1.5	74437346015
1.8	0.54	1.5	74437346015
1.5	0.54	1.5	74437346015
1.2	0.51	1.5	74437346015
1.1	0.49	1.5	74437346015

Table 4: Suggested Inductor Values for f=1MHz, V_{IN}=3.3V and I_{OUT}=2.7A

The product(s) mentioned in this data sheet are no longer being manufactured and may not be ordered (OBS)

OUTPUT CAPACITOR C_{OUT}

Select the output capacitor for voltage rating, capacitance C_{OUT} and Equivalent Series Resistance ESR. The voltage rating, as a rule of thumb, should be at least twice the output voltage. When calculating the required capacitance, usually the overriding requirement is current load-step transient. If the unloading transient (i.e., when load transitions from a high to a low current) is met, then usually the loading transient (when load transitions from a low to a high current) is met as well. Therefore calculate the C_{OUT} based on the unloading transient requirement from:

$$C_{OUT} = L \times \left(\frac{{I_{High}}^2 - {I_{Low}}^2}{(V_{OUT} + V_{transient})^2 - {V_{OUT}}^2} \right)$$

Where:

L is the inductance calculated in the preceding step

I_{High} is the value of load-step prior to unloading. This is nominally set equal to regulator current rating (3A).

I_{Low} is the value of load-step after unloading. This is nominally set equal to 50% of regulator current rating (1.5A).

$V_{transient}$ is the maximum permissible voltage transient corresponding to the load step mentioned above. $V_{transient}$ is typically specified from 3% to 5% of V_{OUT}.

ESR of the capacitor has to be selected such that the output voltage ripple requirement ΔV_{OUT}, nominally 1% of V_{OUT}, is met. Voltage ripple ΔV_{OUT} is mainly composed of two components: the resistive ripple due to ESR and capacitive ripple due to C_{OUT} charge transfer. For applications requiring low voltage ripple, ceramic capacitors are recommended because of their low ESR which is typically in the range of 5mΩ. Therefore ΔV_{OUT} is mainly capacitive. For ceramic capacitors calculate the ΔV_{OUT} from:

$$\Delta V_{OUT} = \frac{\Delta I_L}{8 \times C_{OUT} \times f_s}$$

Where:

ΔI_L is from table 2 or 3

C_{OUT} is the value calculated above

f_s is nominal switching frequency

If tantalum or electrolytic capacitors are used then ΔV_{OUT} is essentially a function of ESR:

$$\Delta V_{OUT} = \Delta I_L \times ESR$$

INPUT CAPACITOR C_{IN}

Select the input capacitor for voltage rating, RMS current rating and capacitance. The voltage rating should be at least 50% higher than the regulator's maximum input voltage. Calculate the capacitor's current rating from:

$$I_{CIN,RMS} = I_{OUT} \times \sqrt{D \times (1 - D)}$$

Where:

I_{OUT} is regulator's maximum current (3A)

D is duty cycle ($D=V_{OUT}/V_{IN}$)

Calculate the C_{IN} capacitance from:

$$C_{IN} = \frac{I_{OUT} \times V_{OUT} \times (V_{IN} - V_{OUT})}{f_s \times {V_{IN}}^2 \times \Delta V_{IN}}$$

Where:

ΔV_{IN} is the permissible input voltage ripple, nominally set at 1% of V_{IN}

LOOP COMPENSATION

XRP6670 utilizes current-mode control. This allows using a minimum of external components to compensate the regulator. In general only two components are needed: RC and CC. Proper compensation of the regulator (determining RC and CC) results in optimum transient response. In terms of power supply control theory, the goals of compensation are to choose RC and CC such that the regulator loop gain has a crossover frequency fc equal to 10% of switching frequency. The corresponding phase-margin should be between 45 degrees and 65 degrees. An important characteristic of current-mode buck regulator is its dominant pole. The frequency of the dominant pole is given by:

$$f_p = \frac{1}{2\pi \times C_{OUT} \times R_{load}}$$

where R_{load} is the output load resistance.

The uncompensated regulator has a constant gain up to its pole frequency, beyond which the gain decreases at -20dB/decade. The zero arising from the output capacitor's ESR is inconsequential if ceramic C_{OUT} is used. This simplifies the compensation. The RC and CC, which are placed between the output of XRP6670's Error Amplifier and ground, constitute a zero. The frequency of this compensating zero is given by:

$$f_z = \frac{1}{2\pi \times RC \times CC}$$

For the typical application circuit shown in this datasheet, RC=10kΩ and CC=1nF provide a satisfactory compensation. Please use EXAR application note for compensating other application circuits.

The Product (or products) mentioned in this data sheet are no longer being manufactured and may not be ordered (OBS)

TYPICAL APPLICATIONS

5V TO 3.3V CONVERSION – 1MHz

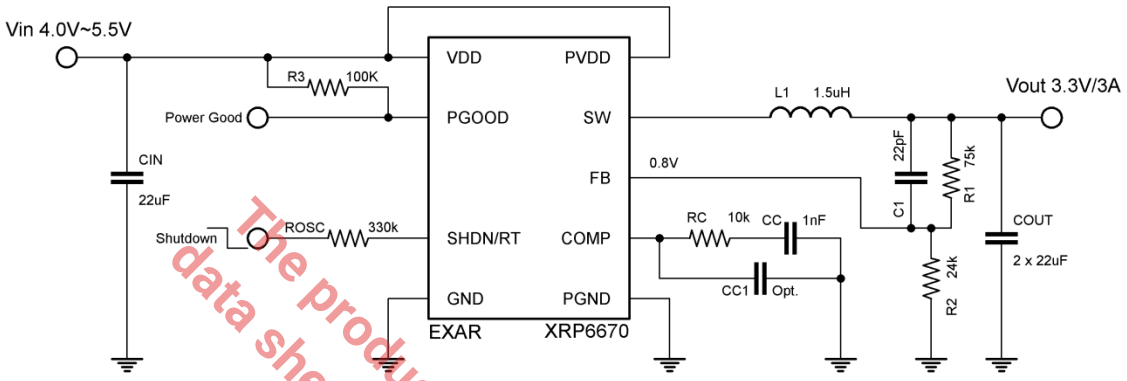

Fig. 17: 3.5V-5.5V to 3.3V Conversion
1MHz Switching Operations

5V TO 3.3V CONVERSION – 2.5MHz

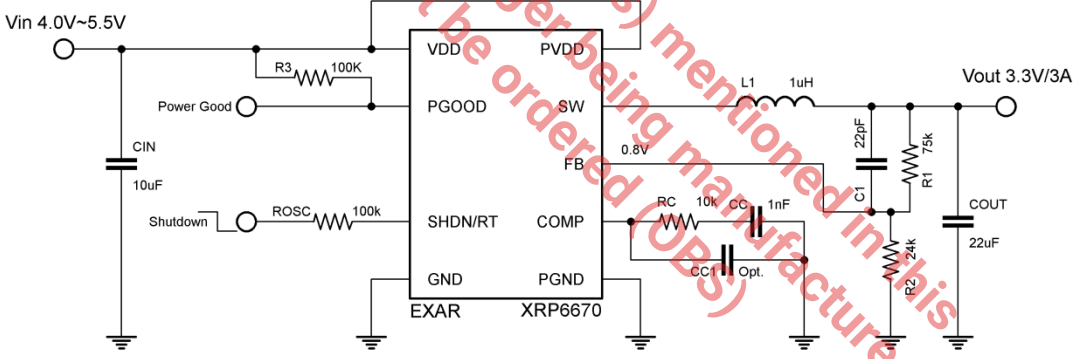

Fig. 18: 4V-5.5V to 3.3V Conversion
2.5MHz Switching Operations

The product(or products) mentioned in this data sheet are no longer being manufactured and may not be ordered (OBS)

PACKAGE SPECIFICATION

3MM X 3MM DFN-10

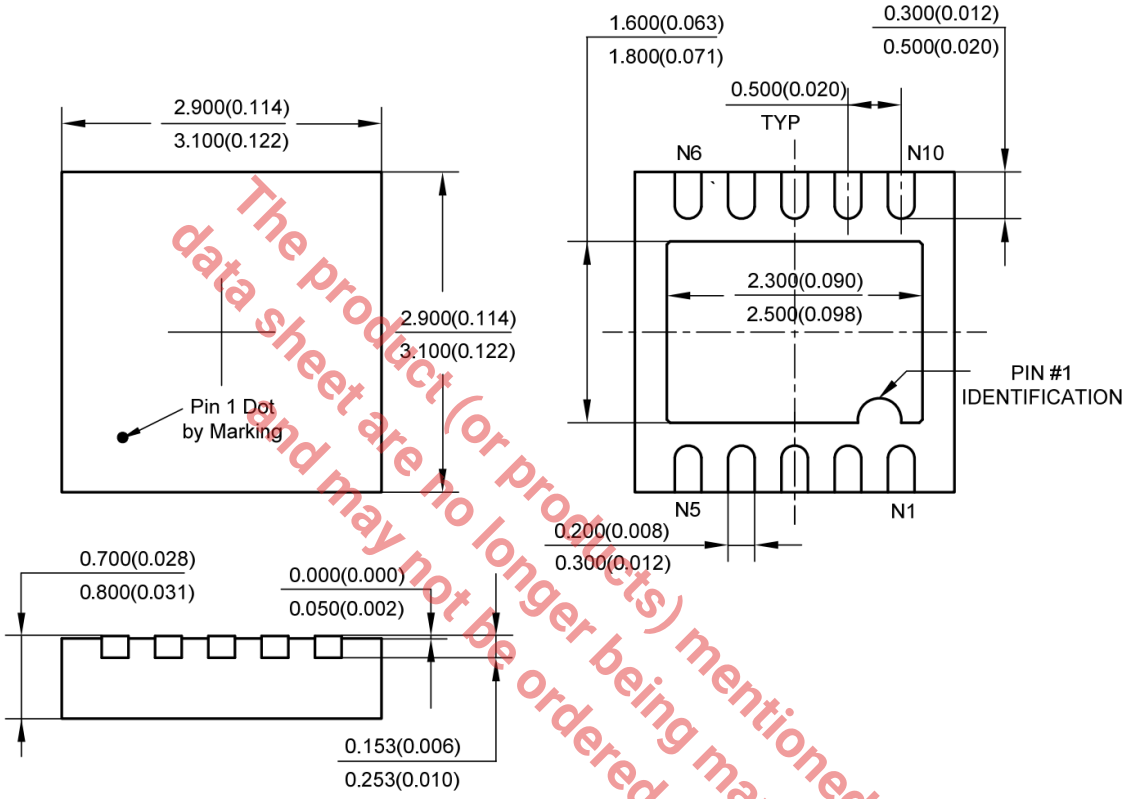

The product (or products) mentioned in this data sheet are no longer being manufactured and may not be ordered (OBS)

REVISION HISTORY

Revision	Date	Description
1.0.0	03/19/2013	Initial release of datasheet
1.0.1	06/20/2013	Corrected CC=1nF on page 10
1.0.2	11/01/2019	Updated to MaxLinear logo. Updated Ordering Information.

The product (or products) mentioned in this data sheet are no longer being manufactured and may not be ordered (OBS)

CORPORATE HEADQUARTERS:

5966 La Place Court

Suite 100

Carlsbad, CA 92008

Tel.: +1 (760) 692-0711

Fax: +1 (760) 444-8598

www.maxlinear.com

The content of this document is furnished for informational use only, is subject to change without notice, and should not be construed as a commitment by Maxlinear, Inc. Maxlinear, Inc. Assumes no responsibility or liability for any errors or inaccuracies that may appear in the informational content contained in this guide. Complying with all applicable copyright laws is the responsibility of the user. Without limiting the rights under copyright, no part of this document may be reproduced into, stored in, or introduced into a retrieval system, or transmitted in any form or by any means (electronic, mechanical, photocopying, recording, or otherwise), or for any purpose, without the express written permission of Maxlinear, Inc.

Maxlinear, Inc. Does not recommend the use of any of its products in life support applications where the failure or malfunction of the product can reasonably be expected to cause failure of the life support system or to significantly affect its safety or effectiveness. Products are not authorized for use in such applications unless Maxlinear, Inc. Receives, in writing, assurances to its satisfaction that: (a) the risk of injury or damage has been minimized; (b) the user assumes all such risks; (c) potential liability of Maxlinear, Inc. Is adequately protected under the circumstances.

Maxlinear, Inc. May have patents, patent applications, trademarks, copyrights, or other intellectual property rights covering subject matter in this document. Except as expressly provided in any written license agreement from Maxlinear, Inc., the furnishing of this document does not give you any license to these patents, trademarks, copyrights, or other intellectual property.

Maxlinear, the Maxlinear logo, and any Maxlinear trademarks, MxL, Full-Spectrum Capture, FSC, G.now, AirPHY and the Maxlinear logo are all on the products sold, are all trademarks of Maxlinear, Inc. or one of Maxlinear's subsidiaries in the U.S.A. and other countries. All rights reserved. Other company trademarks and product names appearing herein are the property of their respective owners.

© 2013 - 2019 Maxlinear, Inc. All rights reserved.