A New Direction in Mixed-Signal

XR71211

1.5A Ultra Low Dropout Voltage Regulator

General Description

The XR71211 is an ultra low dropout voltage regulator capable of delivering an output of 1.5Amps. It differentiates from its competitors by being able to operate from a single supply rail of 1.4V to 2.625V without the need for a noise generating charge pump or secondary bias rail.

This LDO provides a guaranteed dropout voltage of 250mV at maximum junction temperature and is ideal for 1.5V to 1.2V and 1.8V to 1.5V conversions. The output voltage can be set as low as 0.6V with +/-0.5% accuracy making the XR71211 perfectly suited for powering low voltage devices such as FPGAs, DSPs, ASICs and other SOCs.

An enable function, soft start and Power Good flag complete the feature set. Built-in current limit, reverse bias and thermal protection ensures safe operation under abnormal operating conditions.

The XR71211 is offered in RoHS compliant, "green"/halogen free 10-pin 3x3mm DFN package.

FEATURES

- 1.5A Output Current
- 1.4V to 2.625V Single Input Voltage
  - Adjustable Output Voltage ≥0.6V
  - ±0.5% Output Voltage Accuracy
- Ultra Low Dropout Voltage
  - 250mV Max over temp @ 1.5A
- Power Good Flag
- Enable and Soft Start
- Current Limit and Thermal Protection
- Reverse Bias Protection
- RoHS compliant "Green"/Halogen Free
  - 10-pin 3mm x 3mm DFN

APPLICATIONS

- Point of Load Conversion
- Microprocessor, DSP and FPGA Supplies
- Networking and Telecom Equipment
- Switching Supplies Post Regulation

Ordering Information – back page

The product (or products) mentioned in this data sheet are no longer being manufactured and may not be ordered (OBS)

Typical Application

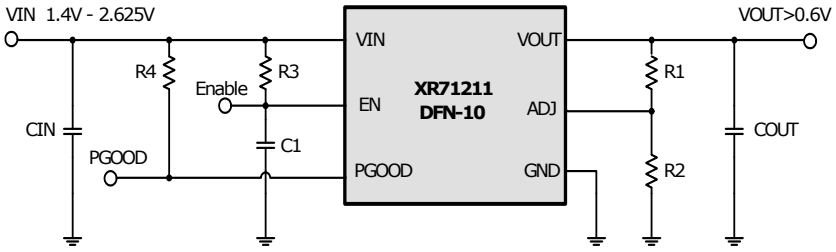

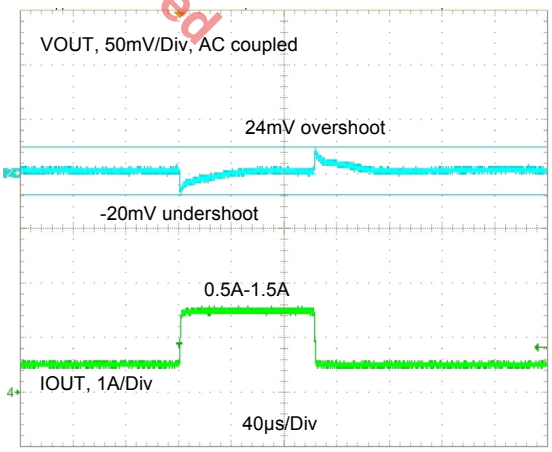

Transient Response

© 2014 Exar Corporation

Absolute Maximum Ratings

Stresses beyond the limits listed below may cause permanent damage to the device. Exposure to any Absolute Maximum Rating condition for extended periods may affect device reliability and lifetime.

Input Voltage (V_{IN}, V_{PGOOD}).....+3V

Enable Voltage (V_{EN}).....V_{IN}+0.5V≤3V

Storage Temperature.....-65°C to +150°C

Junction Temperature.....150°C

Lead Temperature (Soldering, 5 sec).....260°C

ESD Rating (HBM - Human Body Model), All pins.....2kV

Operating Conditions

Input Voltage Range (V_{IN}, V_{EN}, V_{PGOOD}).....1.4V to 2.625V

Junction Temperature Range.....-40°C to +125°C

Thermal Resistance (θ_{JA}) DFN10.....40.5°C/W

The product (or products) mentioned in this data sheet are no longer being manufactured and may not be ordered (OBS)

Electrical Characteristics

Unless otherwise noted: T_A = 25°C, V_{IN} = V_{OUT} + 0.5V, I_{OUT} = 20mA, C_{IN} = 10µF, C_{OUT} = 22µF. Limits applying over the full operating temperature range are denoted by a "•"

Symbol	Parameter	Conditions		Min	Typ	Max	Units
V_{IN}	Input Voltage Operating Range		•	1.4		2.625	V
I_{OUTMAX}	Maximum Output Current[a]		•	1.5			A
I_{GND}	Ground Current	EN active			2.0		mA
		EN active, I_{OUT} = 1.5A			2.5	3.5	mA
I_{SHDN}	Shutdown Current	V_{EN}=0V, I_{OUT}=0mA, PGOOD Floating			12		µA
V_{ADJ}	ADJ Pin Voltage	V_{IN} = 2.5V, V_{OUT} > 1V		598.5	601.5	604.5	mV
			•	594.0		606.0	mV
		V_{IN} = 1.8V		597.0	600.0	603.0	mV
			•	592.0		605.0	mV
		V_{IN} = 1.4V		596.0	599.0	602.0	mV
			•	590.7		604.0	mV
V_{DROP}	Dropout Voltage	I_{OUT} = 1.5A, V_{OUT} = 1.35V[b]	•			250	mV
R_{LOAD}	Output Voltage Load Regulation	V_{IN} = V_{OUT} + 0.5V, 20mA≤ I_{OUT} ≤ 1.5A				0.2	%
PSRR	Power Supply Rejection Ratio	f > 300kHz			30		dB
V_{NOISE}	Output Noise Voltage	10Hz to 100kHz			200		μV_{RMS}
I_{LIMIT}	Current Limit	V_{OUT} = 0.9 x $V_{OUT(NOM)}$	•	1.6		3.2	A
	Reverse Bias Protection V_{OUT} Leakage Current	V_{IN} = 0V, V_{OUT} = 2.625V			-10		µA
	Thermal Shutdown Temperature				160		°C
	Thermal Shutdown Hysteresis				30		°C

© 2014 Exar Corporation

Symbol	Parameter	Conditions		Min	Typ	Max	Units
	Startup Time	V_{OUT} = 1.0V			2		ms
	Power Good Threshold	V_{OUT} rising	•	92	94	97	% of V_{OUT}
	Power Good Threshold Hysteresis	V_{OUT} falling			2.8		% of V_{OUT}
	PGOOD Output Low	V_{IN} > 1.5V, I_{SINK} = 1mA	•			0.4	V
		V_{IN} > 1.4V, I_{SINK} = 200µA	•			0.4	V
Enable Pin							
	Enable Threshold Voltage	V_{EN} rising	•	0.43	0.55	0.67	V
	EN Sink Current	EN < V_{IN}			2.5		µA
		V_{IN} < EN < V_{IN} + 0.5V			15		µA
	Maximum Allowable EN Sink Current	EN = V_{IN} + 0.5V (with internal clamp)				100	µA
	EN Source Current	EN = 0V				10	µA

a. The XR71211 is rated over a junction temperature range T_J of -40°C to +125°C. For a given set of operating conditions, T_J has to be calculated in order to make sure it does not exceed maximum specification. Use equation $T_J = T_A + (P_D \times \theta_{JA})$ where θ_{JA} is the package thermal impedance, T_A is the ambient temperature and P_D is power dissipation. P_D is calculated from $P_D = (V_{IN} - V_{OUT}) \times I_{OUT}$

b. Dropout voltage is defined as the input to output voltage differential ($V_{IN} - V_{OUT}$) where the input voltage is low enough to cause the output voltage to drop 2% from the nominal value.

The Product (or Products) mentioned in this data sheet are no longer being manufactured and may not be ordered (OBS)

Pin Configuration

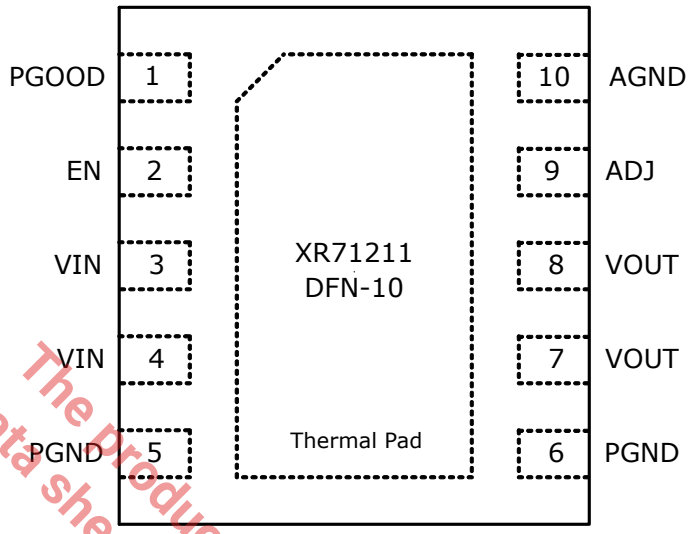

The product (or products) mentioned in this data sheet are no longer being manufactured and may not be offered (OBS)

Pin Assignments

Pin No.	Pin Name	Type	Description
1	PGOOD	OD	Power Good open-drain output. When used it should be pulled up to VIN with a resistor. Typical resistor value is 100kΩ.
2	EN	I	Enable Input Pin. This is a high impedance MOS input with CMOS logic level compatibility. Logic high enables the device; logic low disables the device. EN must be asserted high after VIN reaches its minimum operating range. For automatic startup EN must be sequenced with respect to VIN as shown in application circuit. Do not pull this pin higher than VIN + 0.5V.
3, 4	VIN	PWR	Power Input Pin. Must be closely decoupled to PGND pin with a 4.7µF or greater ceramic capacitor.
5, 6	PGND	PWR	Power Ground
7, 8	VOUT	O	Regulator Output pin. Must be closely decoupled to PGND with a 4.7µF or greater ceramic capacitor.
9	ADJ	I	Adjustable Pin. Connect to a resistive voltage divider to set the output voltage of the device.
10	AGND	PWR	Signal ground. Connect with a separate trace to the ground of the output being regulated.
	Thermal Pad	PWR	Connect to PGND.

Type: I = Input, O = Output, I/O = Input/Output, PWR = Power, OD = Open-Drain

© 2014 Exar Corporation

Functional Block Diagram

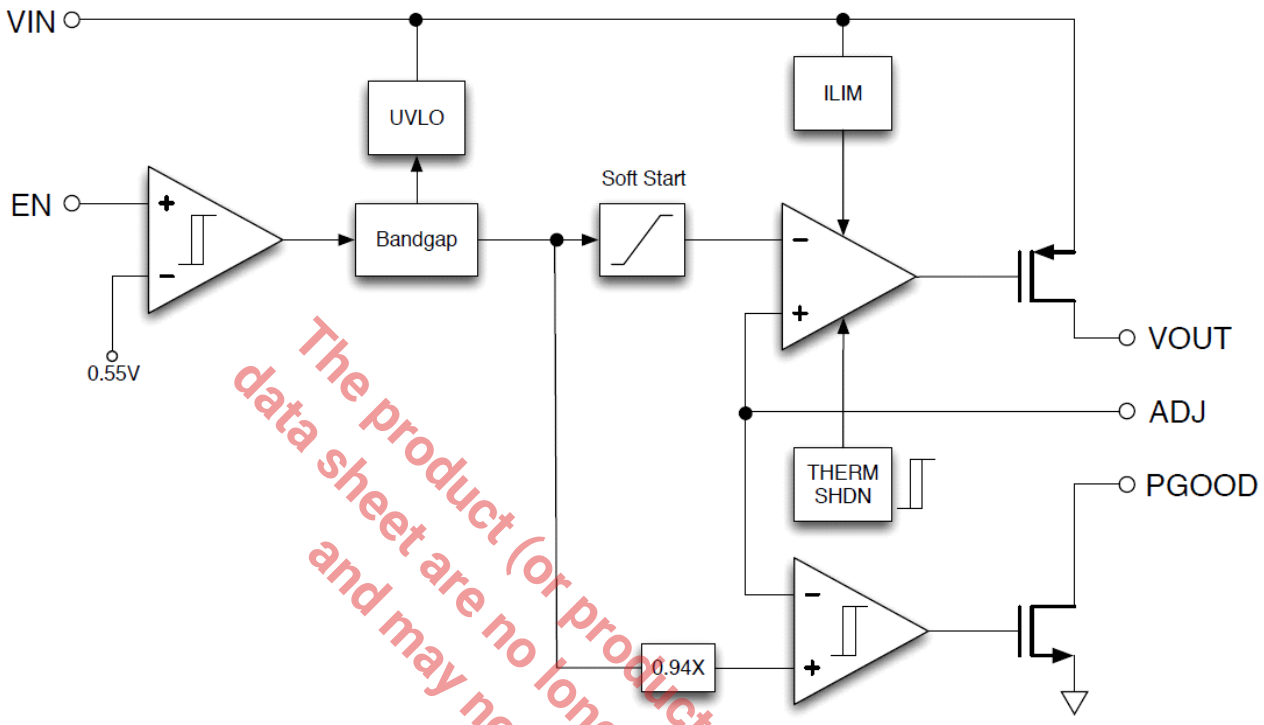

The product (or products) mentioned in this data sheet are no longer being manufactured and may not be ordered (OBS)

Typical Performance Characteristics

Unless otherwise noted: $V_{IN} = V_{OUT} + 0.5V$, $T_J = T_A = 25°C$

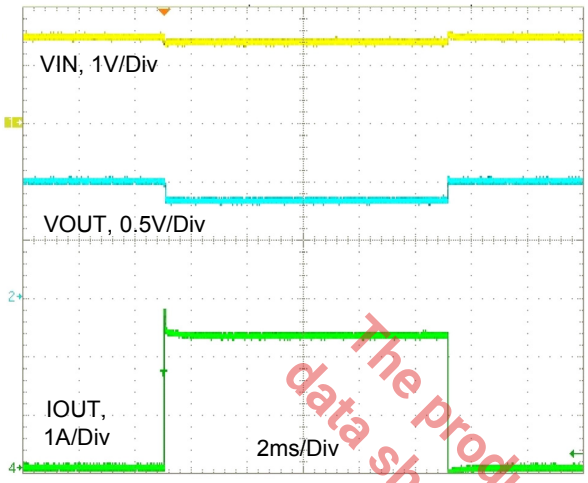

Figure 1: Current Limit, 1.5VIN, 1VOUT

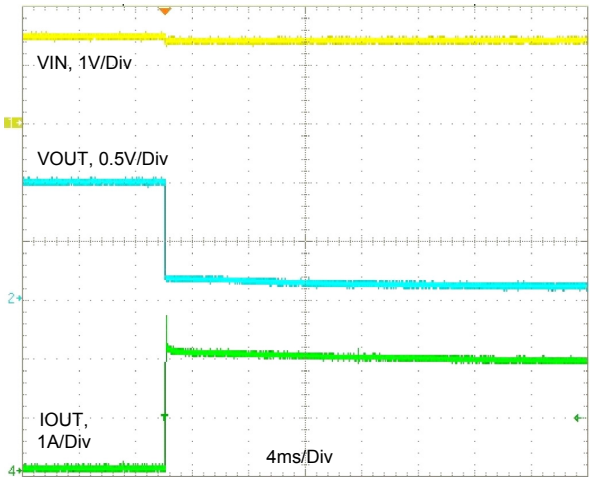

Figure 2: Short-circuit, 1.5VIN, 1VOUT

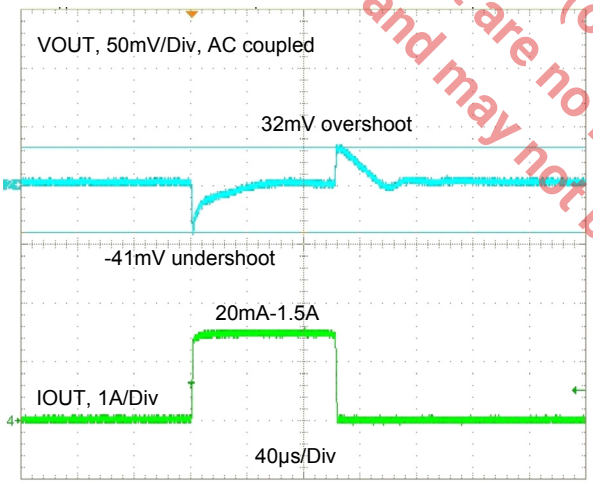

Figure 3: Transient Response, 20mA-1.5A, 1.5VIN, 1VOUT

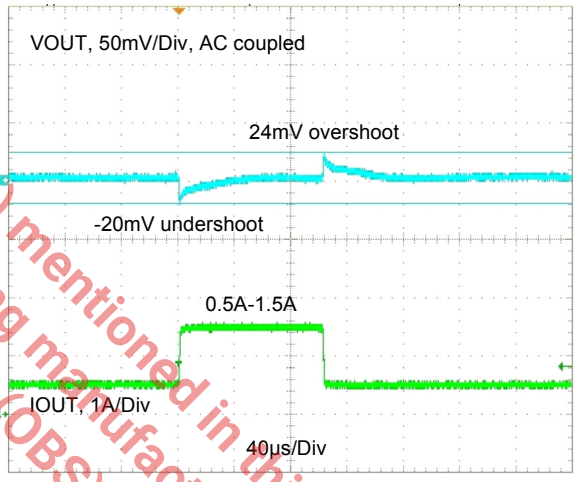

Figure 4: Transient Response, 0.5A-1.5A, 1.5VIN, 1VOUT

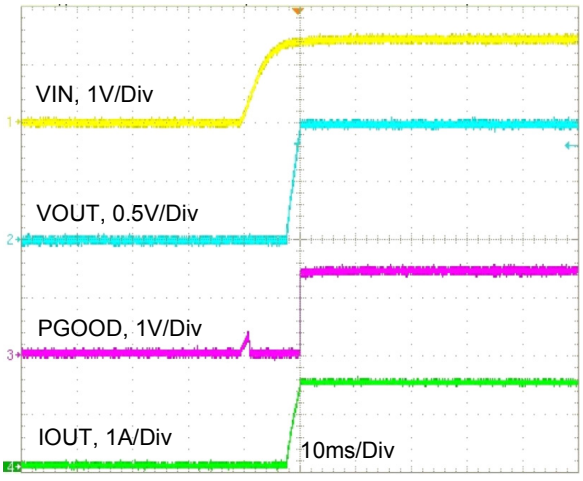

Figure 5: Powerup, IOUT=1.5A, 1.5VIN, 1VOUT

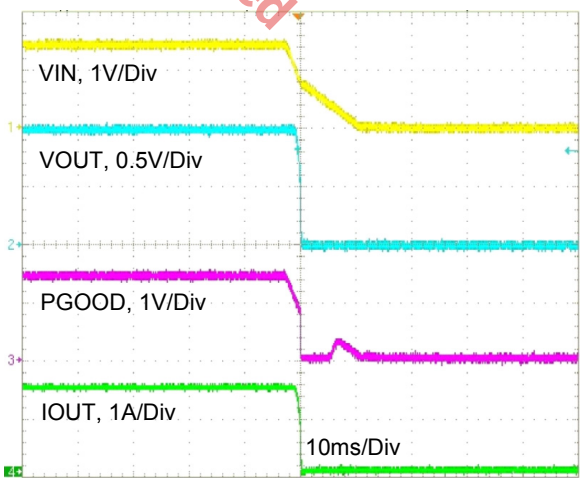

Figure 6: Powerdown, IOUT=1.5A, 1.5VIN, 1VOUT

The product (or products) mentioned in this data sheet are no longer being manufactured and may not be ordered (OBS)

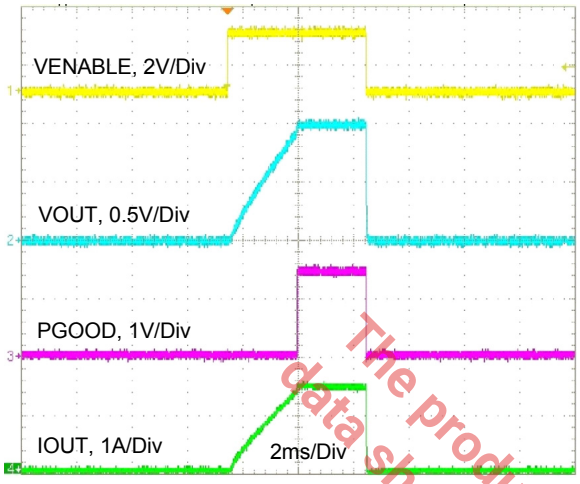

Figure 7: Enable Turn On/Off, 1.5A, 1.5VIN, 1VOUT

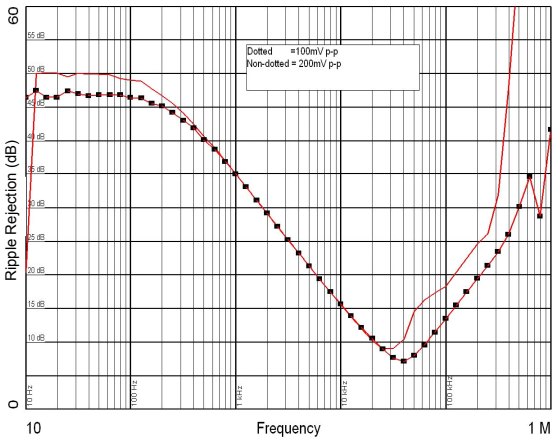

Figure 8: PSRR, 50mA, 1.5VIN, 1VOUT, 22µF COUT

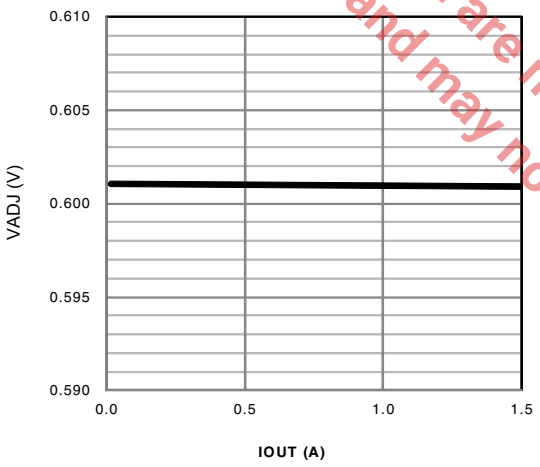

Figure 9: VADJ versus IOUT, 1.5VIN, 1VOUT

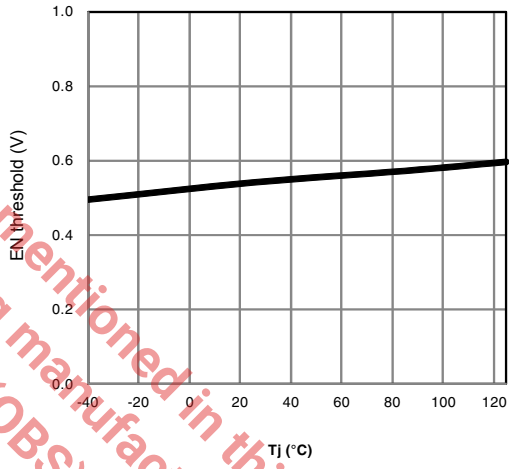

Figure 10: Enable Threshold versus Temperature

The product (or products) mentioned in this data sheet are no longer being manufactured and may not be ordered (OBS)

Functional Description

Single Rail Input Voltage

The XR71211's ultra low input voltage allows single rail operation from 2.625V down to 1.4V without requiring any extra biasing voltage. This single input voltage range provides easy conversions from industry standard 1.5V, 1.8V and 2.5V power rails.

Dropout Voltage

The dropout voltage is the input-to-output differential voltage at which the XR71211 ceases to regulate against further reductions in input voltage; this point occurs when the input voltage approaches the output voltage. The XR71211 provides a maximum of 250mV dropout voltage over full operating temperature range making it the perfect solution conversions requiring a 300mV differential between Vin and Vout. For example, 1.5Vin to 1.2Vout.

The maximum output current available for a given conversion is dependent on the operating conditions and thermal performance of DFN10/PCB. See note (a) on page 3.

Setting The Output Voltage

The XR71211 is an adjustable regulator that can be programmed to any value between 0.6V and 2.4V using 2 external resistors, R1 and R2. The relationship between the resistors and the output voltage is:

$$R_1 = R_2 \times \left(\frac{V_{OUT}}{0.6} - 1\right)$$

where VOUT is the desired output voltage.

Sum of resistors R1 and R2 must meet the following requirement:

$$\frac{V_{OUT}}{R_1 + R_2} \geq 20mA$$

Input and Output Capacitors

The XR71211 is designed to be stable for all available types and values of output capacitors greater than 4.7µF.

The required capacitance on the VIN and VOUT pins strongly depends on the input supply source impedance; the minimum recommended capacitor for VIN is 4.7µF. Low ESR ceramic X5R and X7R capacitors are recommended and should be placed as close as possible to the pins for optimal performance.

Because of the low voltages and high currents supported by this device, typical capacitance values of 10uF for input and 22uF for output are recommended when powering high speed digital circuits.

Enable Input and Shutdown

The enable pin (EN) can be used to shut down the XR71211. Connecting this pin to ground signal or to a voltage less than typical 0.55V will completely turn off the regulator. Pulling the EN above 0.67V enables the XR71211. Where EN is derived from VIN it must be sequenced with respect to VIN as shown in the application circuit. Where an independent control signal is applied to EN, it must be asserted high after VIN reaches its minimum operating range.

The enable pin is a high impedance MOS input. In order to allow the EN pin compatibility with 5V or 3.3V control signals, there is an internal clamp set to VIN+0.5V. When using the EN pin with a control signal greater than VIN+0.5V, a resistor must be placed in series with the EN pin to limit the input current below 100uA. The resistor must also be low enough to ensure at least 15uA can be sourced to enable the part.

The precision feature enables simple sequencing of multiple power supplies with a resistor divider from another power supply or power good flag. The EN pin can also be used as an external UVLO to disable the part when input voltage falls below a lower boundary of operation.

Soft Start

The XR71211 features a soft-start which controls the output voltage ramp and allows the regulator to gradually reach the initial steady state operating point. This reduces current spikes and surges at start up due to output capacitor inrush current. Internal sequencing completes in 50us, and then the reference voltage is linearly ramped over a period of approximately 2000us.

The inrush current will be the lesser of the current limit value or the current defined by the equation below:

$$I_{INRUSH} = C_{OUT} \times \frac{V_{OUT}}{2000\mu s}$$

The product (or products) mentioned in this data sheet are no longer being manufactured and may not be ordered (OBS)

Power Good Flag

The XR71211 features a Power Good Flag output signaling an abnormal operating condition. A low voltage on the Power Good Flag output indicates:

• Output voltage VOUT is approximately 9% below its expected value

• A thermal fault has occurred

The Power Good Flag output, is an open collector capable of sinking in excess of 1mA.

Output Current Limit Protection

The XR71211 integrates output current limit protection in order to protect the system main power supply, the regulator itself and the load from excessive current flow. This current limit effectively keeps the flow of current in the circuit at a safe level.

In short circuit conditions, the device will take additional steps to limit input and power by disabling and re-enabling the pass device until the short condition is removed and normal operation can resume. Depending on the impedance of the short, this short circuit protection function may initiate operation between 10% and 50% of the targeted output voltage.

Thermal Protection and Shutdown

The XR71211 includes a thermal shutdown circuitry in order to restrict the device's operating temperature within a safe operating range. When activated, typically at 160°C, the XR71211 is forced into a low power reset state with a typical hysteresis of 30°C.

Combined with the short circuit current protection, it reduces and limits the heating effects of over-temperature and/or over-current conditions on the LDO and surrounding circuits.

Reverse Bias Protection

In addition to the standard protection features in these devices, they also incorporate a reverse bias protection. Most LDOs have a parasitic body diode that provides a path from VOUT to VIN if the input is shorted to ground. The XR71211 has a blocking diode to ensure that no high discharge currents can occur between the output and the input when the input is shorted to ground.

The product (or products) mentioned in this data sheet are no longer being manufactured and may not be ordered (OBS)

Application Circuit

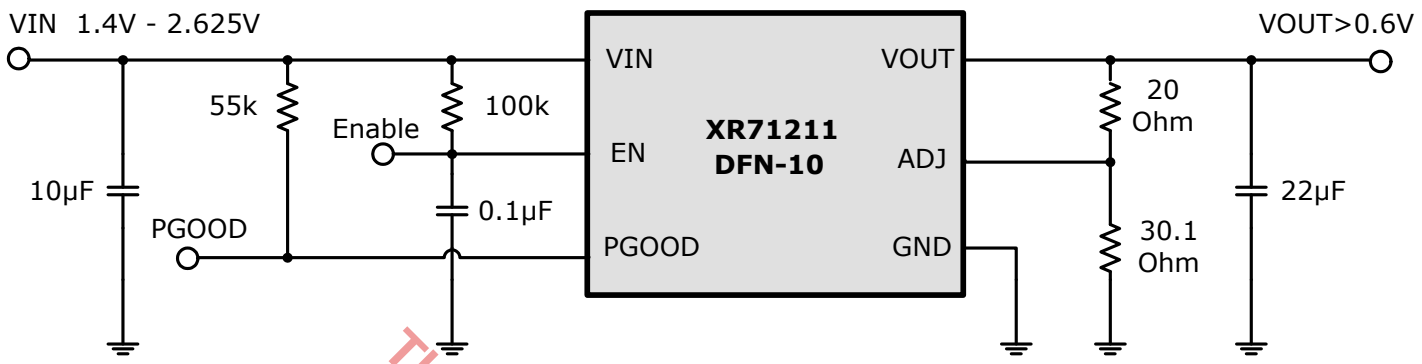

The product (or products) mentioned in this data sheet are no longer being manufactured and may not be ordered (OBS)

Mechanical Dimensions

10-Pin DFN

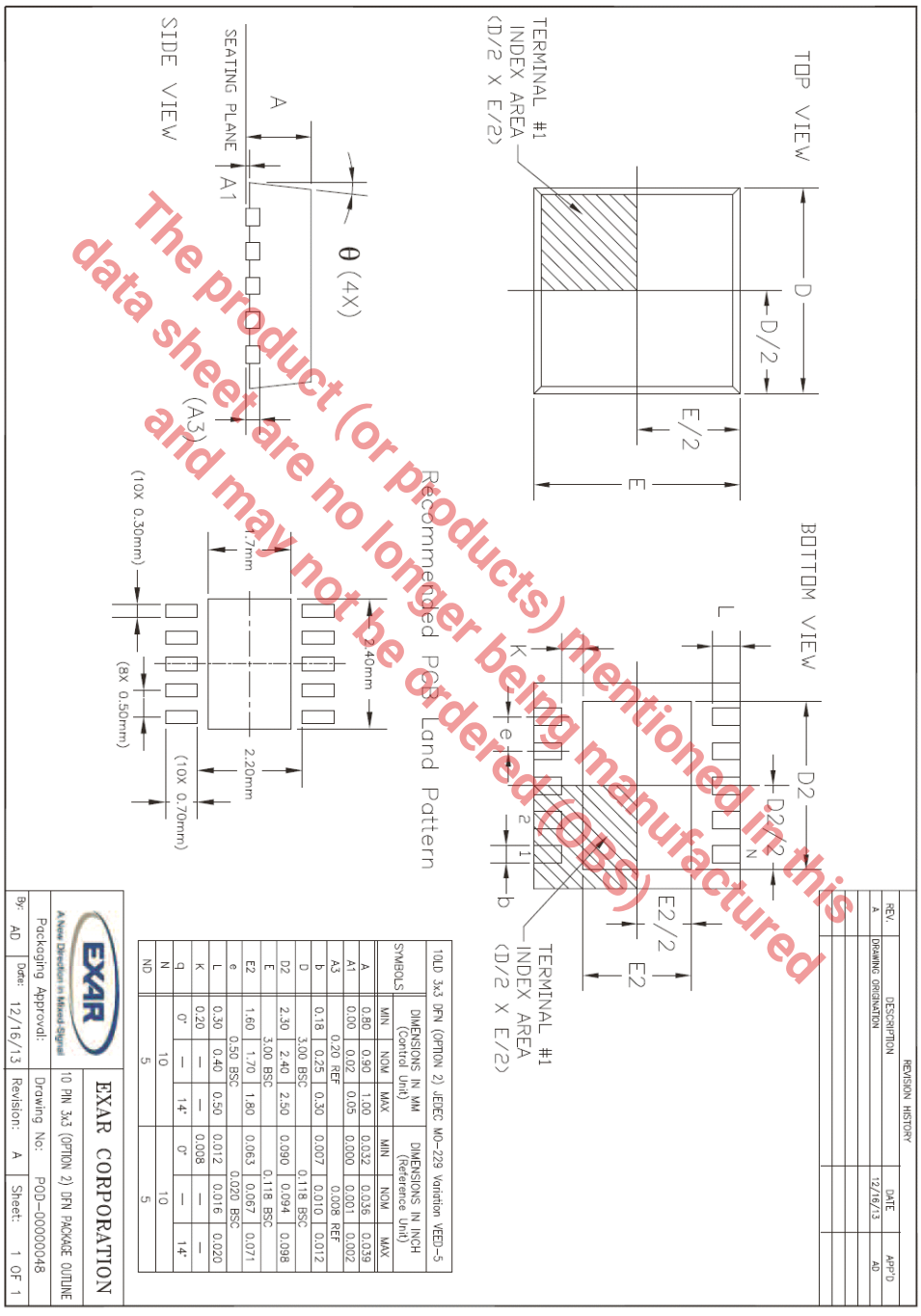

The product (or products) mentioned in this data sheet are no longer being manufactured and may not be ordered (OBS)

Ordering Information

Part Number	Package	Green	Operating Temperature Range	Packaging Quantity	Marking
XR71211EH-F	10-pin DFN	Yes	-40°C to +125°C	Bulk	71211
XR71211EHMTR-F	10-pin DFN	Yes	-40°C to +125°C	250 / Reel	71211
XR71211EHTR-F	10-pin DFN	Yes	-40°C to +125°C	3000 / Reel	71211
XR71211EVB	Evaluation Board	N/A	N/A	N/A	N/A

Revision History

Revision	Date	Description
1A	May 2014	Initial release
1B	September 2014	Added to EN pin description, added to Enable Input Functional Description ECN 1440-05

The product(or products) mentioned in this data sheet are no longer being manufactured and may not be ordered (OBS)

For Further Assistance:

Technical Support: techsupport.exar.com

Technical Documentation: www.exar.com/techdoc

Exar Corporation Headquarters and Sales Offices
48720 Kato Road Tel.: +1 (510) 668-7000
Fremont, CA 95438 - USA Fax: +1 (510) 668-7001

A New Direction in Mixed-Signal

NOTICE

EXAR Corporation reserves the right to make changes to the products contained in this publication in order to improve design, performance or reliability. EXAR Corporation assumes no responsibility for the use of any circuits described herein, conveys no license under any patent or other right, and makes no representation that the circuits are free of patent infringement. Charts and schedules contained herein are only for illustration purposes and may vary depending upon a user's specific application. While the information in this publication has been carefully checked; no responsibility, however, is assumed for inaccuracies.

EXAR Corporation does not recommend the use of any of its products in life support applications where the failure or malfunction of the product can reasonably be expected to cause failure of the life support system or to significantly affect its safety or effectiveness. Products are not authorized for use in such applications unless EXAR Corporation receives, in writing, assurances to its satisfaction that: (a) the risk of injury or damage has been minimized; (b) the user assumes all such risks; (c) potential liability of EXAR Corporation is adequately protected under the circumstances.

Reproduction, in part or whole, without the prior written consent of EXAR Corporation is prohibited.