XR76203-Q / XR76205-Q / XR76208-Q

AEC-Q100 Qualified 40V 3A/5A/8A Synchronous Step Down COT Regulators

General Description

The XR76203-Q, XR76205-Q and XR76208-Q are synchronous step-down regulators combining the controller, drivers, bootstrap diode and MOSFETs in a single package for point-of-load supplies well suited for automotive applications. Qualified per AEC-Q100, the XR76203-Q, XR76205-Q and XR76208-Q have load current ratings of 3A, 5A and 8A respectively. A wide 5.5V to 40V input voltage range allows for single supply operation from 12V battery systems required to withstand load dump, industry standard 24V ±10%, 18V-36V, and rectified 18VAC and 24VAC rails.

With a proprietary emulated current mode Constant On-Time (COT) control scheme, the XR76203-Q, XR76205-Q and XR76208-Q provide extremely fast line and load transient response using ceramic output capacitors. They require no loop compensation, simplifying circuit implementation and reducing overall component count. The control loop also provides 0.07% load and 0.15% line regulation and maintains constant operating frequency. A selectable power saving mode allows the user to operate in discontinuous conduction mode (DCM) at light current loads, thereby significantly increasing the converter efficiency.

A host of protection features, including over-current, over-temperature, short-circuit, and UVLO helps achieve safe operation under abnormal operating conditions.

The XR76203-Q, XR76205-Q and XR76208-Q are available in a RoHS-compliant, green / halogen-free, space-saving QFN 5x5mm package.

The product(s) mentioned in this data sheet are no longer being manufactured and may not be ordered (OBS)

FEATURES

- Automotive AEC-Q100 qualified
  - Temperature Grade 1: -40°C to 125°C
  - HBM ESD Class Level 2
  - CDM ESD Class Level C4B
- Controller, drivers, bootstrap diode and MOSFETs integrated in one package
- 3A, 5A and 8A step down regulators
  - Wide 5.5V to 40V input voltage range
  - ≥0.6V adjustable output voltage
- Proprietary Constant On-Time control
  - No loop compensation required
  - Stable ceramic output capacitor operation
  - Programmable 200ns to 2µs on-time
  - Constant 100kHz to 800kHz frequency
- Selectable CCM or CCM / DCM
  - CCM / DCM for high efficiency at light-load
  - CCM for constant frequency at light-load
- Programmable hiccup current limit with thermal compensation
- Precision enable and Power Good flag
- Programmable soft-start
- 30-pin 5x5mm QFN package with wettable flanks

APPLICATIONS

- Automotive systems
- Distributed power architecture
- Point-of-Load converters
- Power supply modules
- FPGA, DSP, and processor supplies
- Industrial and military

Typical Application

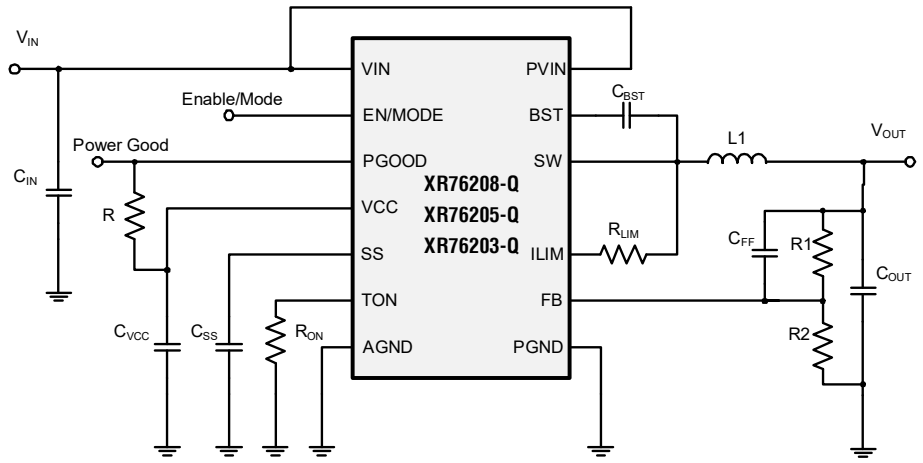

Ordering Information - Back Page

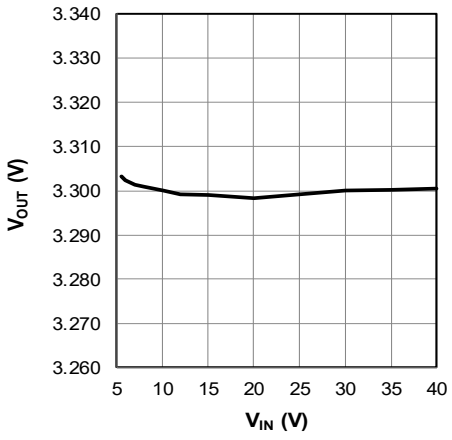

Line Regulation

Absolute Maximum Ratings

Stresses beyond the limits listed below may cause permanent damage to the device. Exposure to any Absolute Maximum Rating condition for extended periods may affect device reliability and lifetime.

PV_{IN}, V_{IN}.....-0.3V to 43V

V_{CC}.....-0.3V to 6.0V

BST.....-0.3V to 48V(1)

BST-SW.....-0.3V to 6V

SW, ILIM.....-1V to 43V(1, 2)

ALL other pins.....-0.3V to VCC+0.3V

Storage temperature.....-65°C to +150°C

Junction temperature.....150°C

Power dissipation.....Internally Limited

Lead temperature (Soldering, 10 sec).....300°C

ESD rating (HBM - Human Body Model).....±2kV

ESD rating (Charged Device Model (CDM) per AEC Q100-011, Non-corner pins.....±500V

ESD Rating (Charged Device Model (CDM) per AEC Q100-011, Corner pins 1, 7, 8, 14, 15, 22, 23, 30.....±750V

Operating Conditions

PV_{IN}.....5V to 40V

V_{IN}.....5.5V to 40V

SW, ILIM.....-1V to 40V(1)

PGOOD, V_{CC}, T_{ON}, SS, EN, FB.....-0.3V to 5.5V

Switching frequency.....100kHz to 800kHz(3)

Junction temperature range.....-40°C to +125°C

XR76203-Q package thermal resistance, θ_{JA}.....28°C/W

XR76205-Q package thermal resistance, θ_{JA}.....26°C/W

XR76208-Q package thermal resistance, θ_{JA}.....25°C/W

XR76203-Q package power dissipation at 25°C.....3.6W

XR76205-Q package power dissipation at 25°C.....3.8W

XR76208-Q package power dissipation at 25°C.....4.0W

Note 1: No external voltage applied.

Note 2: SW pin's minimum DC range is -1V, transient is -5V for less than 50ns.

Note 3: Recommended frequency.

The product (or products) mentioned in this data sheet are no longer being manufactured and may not be ordered (OBS)

Electrical Characteristics

Unless otherwise noted: T_J = 25°C, V_{IN} = 24V, BST = V_{CC}, SW = AGND = PGND = 0V, C_{VCC} = 4.7µF. Limits applying over the full operating temperature range are denoted by a "•"

Symbol	Parameter	Conditions		Min	Typ	Max	Units
Power Supply Characteristics							
V_{IN}	Input voltage range	VCC regulating	•	5.5		40	V
I_{VIN}	VIN input supply current	Not switching, V_{IN} = 24V, V_{FB} = 0.7V	•		0.7	2	mA
I_{VIN}	VIN input supply current (XR76203-Q)	f = 300kHz, R_{ON} = 215kΩ, VFB = 0.58V			12		mA
I_{VIN}	VIN input supply current (XR76205-Q)	f = 300kHz, R_{ON} = 215kΩ, VFB = 0.58V			15		mA
I_{VIN}	VIN input supply current (XR76208-Q)	f = 300kHz, R_{ON} = 215kΩ, VFB = 0.58V			19		mA
I_{OFF}	Shutdown current	Enable = 0V, V_{IN} = 12V			1		µA
Enable and Under-Voltage Lock-Out UVLO							
$V_{IH_EN_1}$	EN pin rising threshold		•	1.8	1.9	2.0	V
$V_{EN_H_1}$	EN pin hysteresis				70		mV
$V_{IH_EN_2}$	EN pin rising threshold for DCM / CCM operation		•	2.8	3.0	3.1	V
$V_{EN_H_2}$	EN pin hysteresis				100		mV

Symbol	Parameter	Conditions		Min	Typ	Max	Units
	VCC UVLO start threshold, rising edge		●	4.00	4.25	4.40	V
	VCC UVLO hysteresis				230		mV
Reference Voltage							
V_{REF}	Reference voltage	V_{IN} = 5.5V to 40V, VCC regulating		0.596	0.600	0.604	V
		V_{IN} = 5.5V to 40V, VCC regulating	●	0.594	0.600	0.606	V
	DC line regulation	CCM, closed loop, V_{IN}=5.5V-40V, applies to any C_{OUT}			±0.33		%
	DC load regulation	CCM, closed loop, applies to any C_{OUT}			±0.39		%
Programmable Constant On-Time							
T_{ON1}	On-time 1	R_{ON} = 237kΩ, V_{IN} = 40V	●	1570	1840	2120	ns
	f corresponding to on-time 1	V_{OUT}= 24V, V_{IN} = 40V, R_{ON} = 237kΩ	●	283	326	382	kHz
$T_{ON(MIN)}$	Minimum programmable on-time	R_{ON} = 14kΩ, V_{IN} = 40V			120		ns
T_{ON2}	On-time 2	R_{ON} = 14kΩ, V_{IN} = 24V	●	174	205	236	ns
T_{ON3}	On-time 3	R_{ON} = 35.7kΩ, V_{IN} = 24V	●	407	479	550	ns
	f corresponding to on-time 3	V_{OUT} = 3.3V, V_{IN} = 24V, R_{ON} = 35.7kΩ	●	250	287	338	kHz
	f corresponding to on-time 3	V_{OUT} = 5.0V, V_{IN} = 24V, R_{ON} = 35.7kΩ	●	379	435	512	kHz
	Minimum off-time		●		250	350	ns
Diode Emulation Mode							
	Zero crossing threshold	DC value measured during test			-2		mV
Soft-start							
	SS charge current		●	-14	-10	-6	µA
	SS discharge current	Fault present	●	1			mA
VCC Linear Regulator							
	VCC output voltage	V_{IN} = 6V to 40V, I_{LOAD} = 0 to 30mA	●	4.8	5.0	5.2	V
		V_{IN} = 5V, I_{LOAD} = 0 to 20mA	●	4.51	4.7		V
Power Good Output							
	Power Good threshold			-10	-6.9	-5	%
	Power Good hysteresis				1.6	4	%
	Power Good sink current			1			mA
Protection: OCP, OTP, Short-Circuit							
	Hiccup timeout				110		ms
	ILIM pin source current			45	50	55	µA
	ILIM current temperature coefficient				0.4		%/°C
	OCP comparator offset		●	-8	0	+8	mV
	Current limit blanking	GL rising > 1V			100		ns

The product (or products) mentioned in this data sheet are no longer being manufactured and may not be ordered (OBS)

Symbol	Parameter	Conditions		Min	Typ	Max	Units
	Thermal shutdown threshold(1)	Rising temperature			150		°C
	Thermal hysteresis(1)				15		°C
	VSCTH feedback pin short-circuit threshold	Percent of V_{REF}, short circuit is active after PGOOD is asserted	•	50	60	70	%
XRP76203 Output Power Stage							
R_{DSON}	High-side MOSFET R_{DSON}	I_{DS} = 1A			115	160	mΩ
	Low-side MOSFET R_{DSON}				40	59	mΩ
I_{OUT}	Maximum output current		•	3			A
XRP76205 Output Power Stage							
R_{DSON}	High-side MOSFET R_{DSON}	I_{DS} = 2A			42	59	mΩ
	Low-side MOSFET R_{DSON}				40	59	mΩ
I_{OUT}	Maximum output current		•	5			A
XRP76208 Output Power Stage							
R_{DSON}	High-side MOSFET R_{DSON}	I_{DS} = 2A			42	59	mΩ
	Low-side MOSFET R_{DSON}				16.2	21.5	mΩ
I_{OUT}	Maximum output current		•	8			A

Note 1: Guaranteed by design.

The product (or products) mentioned in this data sheet are no longer being manufactured and may not be ordered (OBS)

Pin Configuration, Top View

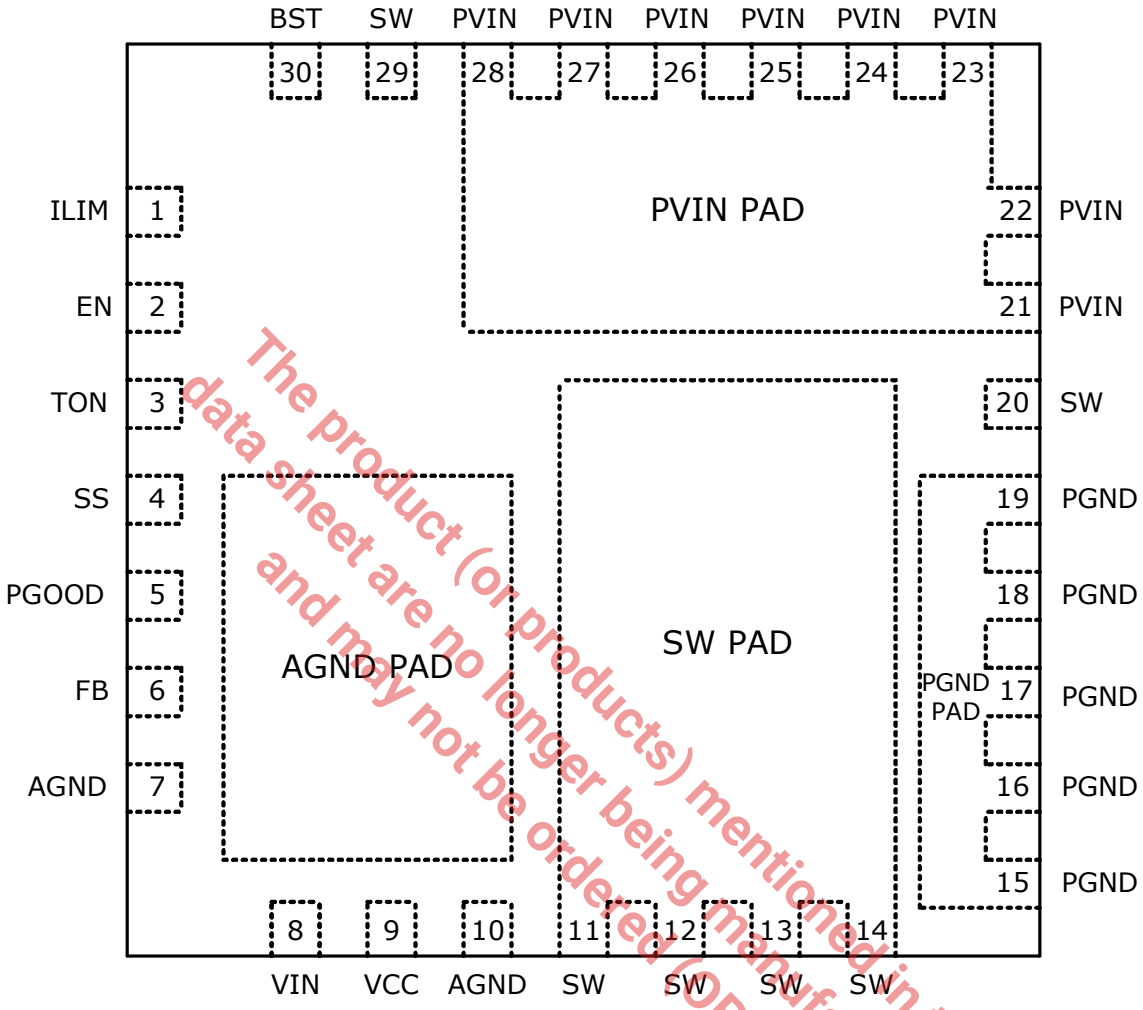

The product (or products) mentioned in this data sheet are no longer being manufactured and may not be ordered (OBS)

Pin Assignments

Pin No.	Pin Name	Type	Description
1	ILIM	A	Over-current protection programming. Connect with a resistor to SW.
2	EN/MODE	I	Precision enable pin. Pulling this pin above 1.9V will turn the regulator on and it will operate in CCM. If the voltage is raised above 3.0V, then the regulator will operate in DCM / CCM depending on load.
3	TON	A	Constant on-time programming pin. Connect with a resistor to AGND.
4	SS	A	Soft-start pin. Connect an external capacitor between SS and AGND to program the soft-start rate based on the 10µA internal source current.
5	PGOOD	O, OD	Power-Good output. This open-drain output is pulled low when V_{OUT} is outside the regulation.
6	FB	A	Feedback input to feedback comparator. Connect with a set of resistors to VOUT and AGND in order to program V_{OUT}.
7, 10, AGND Pad	AGND	A	Signal ground for control circuitry. Connect AGND Pad with a short trace to pins 7 and 10.
8	VIN	A	Supply input for the regulator's LDO. Normally it is connected to PVIN.
9	VCC	A	The output of regulator's LDO. For operation using a 5V rail, VCC should be shorted to VIN.
11-14, 20, 29, SW Pad	SW	PWR	Switch node. The drain of the low-side N-channel MOSFET. The source of the high-side MOSFET is wire-bonded to the SW Pad. Pins 20 and 29 are internally connected to the SW pad.
15-19, PGND Pad	PGND	PWR	Ground of the power stage. Should be connected to the system's power ground plane. The source of the low-side MOSFET is wire-bonded to PGND Pad.
21-28, PVIN Pad	PVIN	PWR	Input voltage for power stage. The drain of the high-side N-channel MOSFET.
30	BST	A	High-side driver supply pin. Connect a bootstrap capacitor between BST and pin 29.

Type: A = Analog, I = Input, O = Output, I/O = Input/Output, PWR = Power, OD = Open-Drain

The product (or products) mentioned in this data sheet are no longer being manufactured and may not be ordered (OBS)

Functional Block Diagram

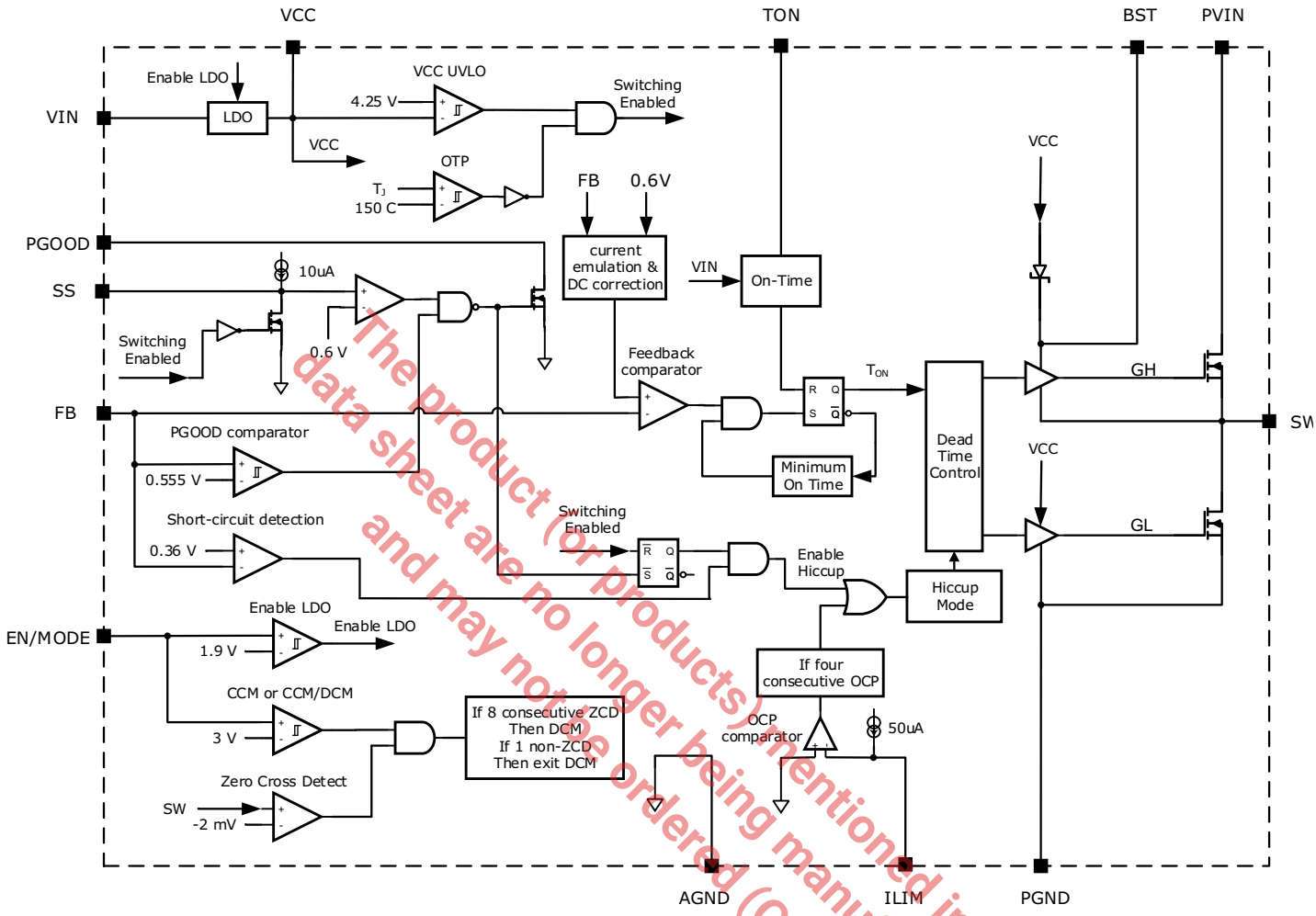

The product (or products) mentioned in this data sheet are no longer being manufactured and may not be ordered (OBS)

Typical Performance Characteristics

Unless otherwise noted: V_{IN} = 24V, V_{OUT} = 3.3V, I_{OUT} = 8A, f = 400kHz, T_A = 25°C. Schematic from the application information section.

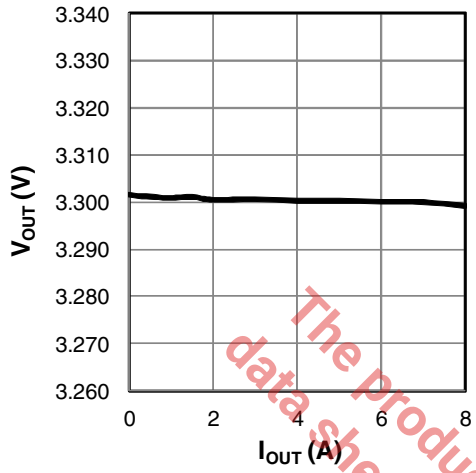

Figure 1: Load Regulation

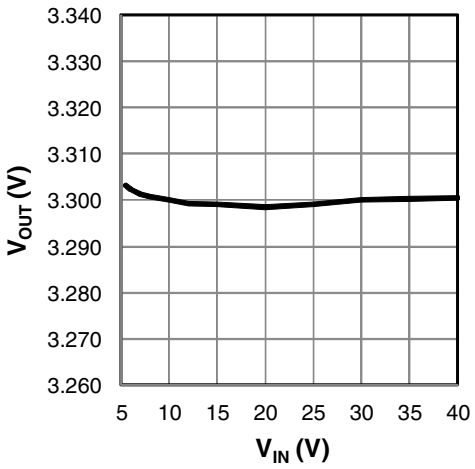

Figure 2: Line Regulation

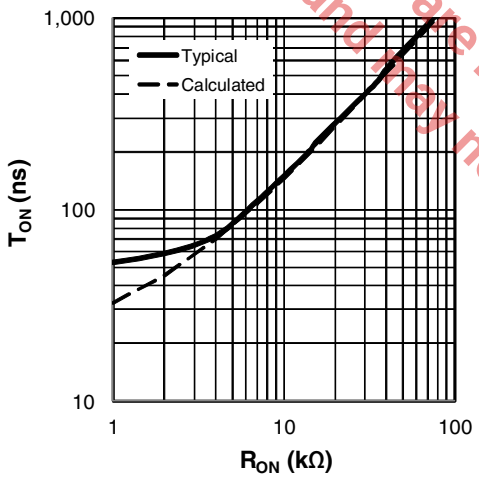

Figure 3: T_{ON} versus R_{ON}

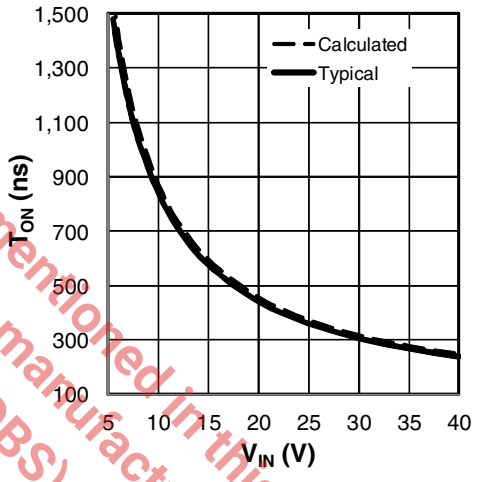

Figure 4: T_{ON} versus V_{IN}, R_{ON} = 27.4kΩ

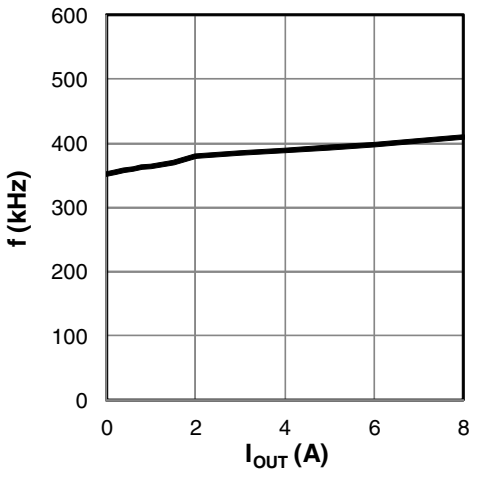

Figure 5: Frequency versus I_{OUT}

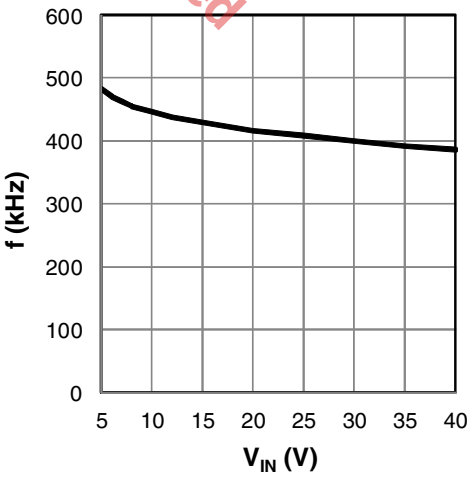

Figure 6: Frequency versus V_{IN}

The product (or products) mentioned in this data sheet are no longer being manufactured and may not be ordered (OBS)

Typical Performance Characteristics

Unless otherwise noted: V_{IN} = 24V, V_{OUT}=3.3V, I_{OUT}=8A, f=400kHz, T_A = 25°C. Schematic from the application information section.

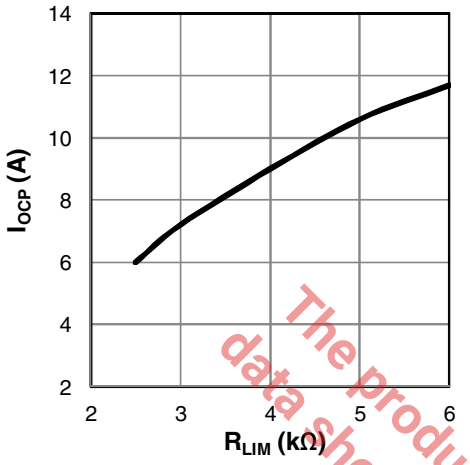

Figure 7: XR76208-Q I_{OCP} versus R_{LIM}

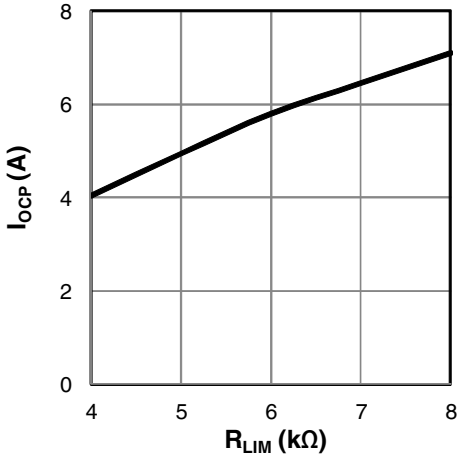

Figure 8: XR76205-Q I_{OCP} versus R_{LIM}

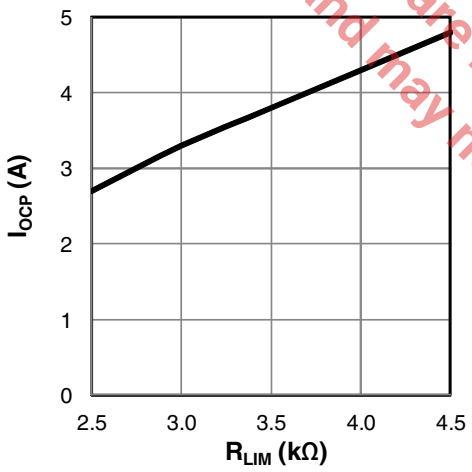

Figure 9: XR76203-Q I_{OCP} versus R_{LIM}

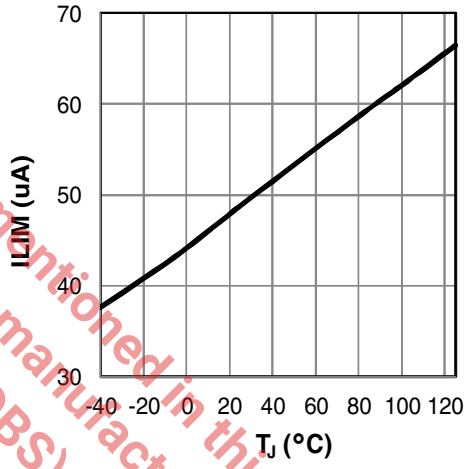

Figure 10: I_{LIM} versus Temperature

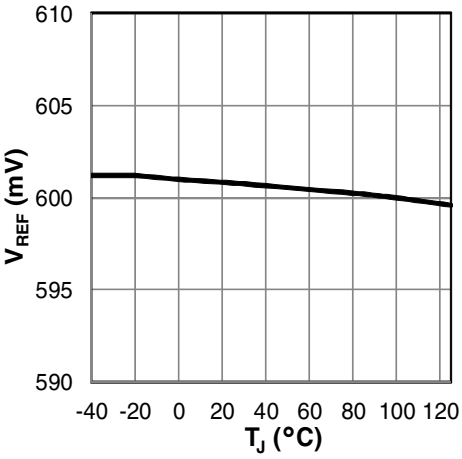

Figure 11: V_{REF} versus Temperature

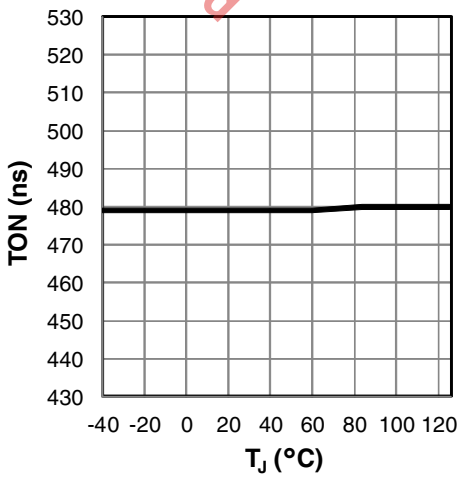

Figure 12: T_{ON} versus Temperature, R_{ON} = 35.7kΩ

The product (or products) mentioned in this data sheet are no longer being manufactured and may not be ordered (OBS)

Typical Performance Characteristics

Unless otherwise noted: V_{IN} = 24V, V_{OUT} = 3.3V, I_{OUT} = 8A, f = 400kHz, T_A = 25°C. Schematic from the application information section.

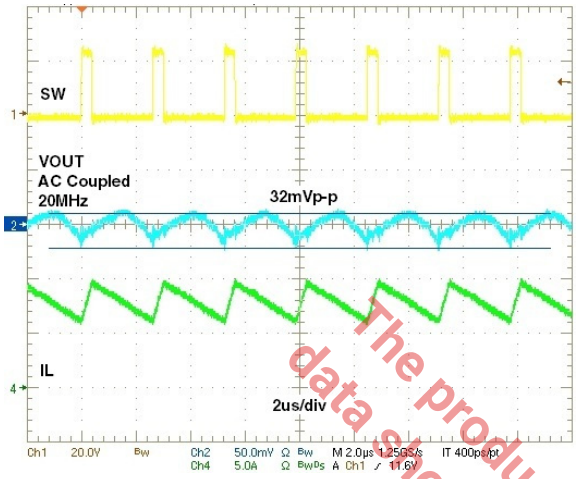

Figure 13: Steady State, I_{OUT}=8A

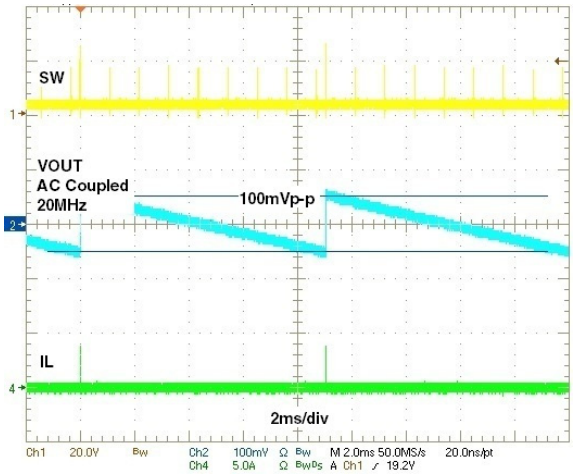

Figure 14: Steady State, DCM, I_{OUT}=0A

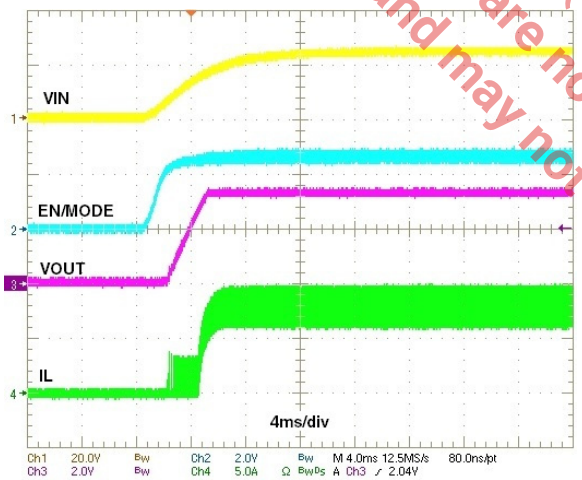

Figure 15: Power-up, Forced CCM

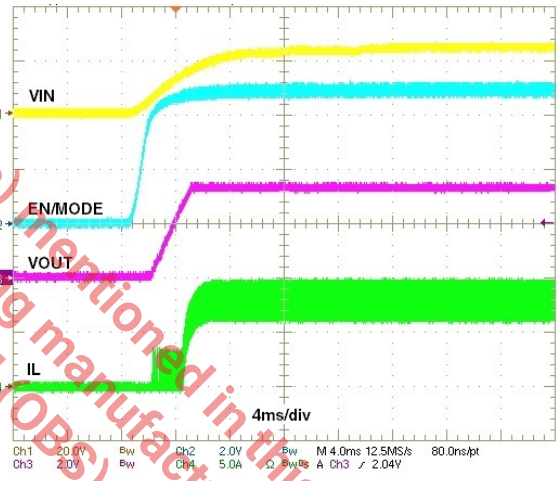

Figure 16: Power-up, DCM / CCM

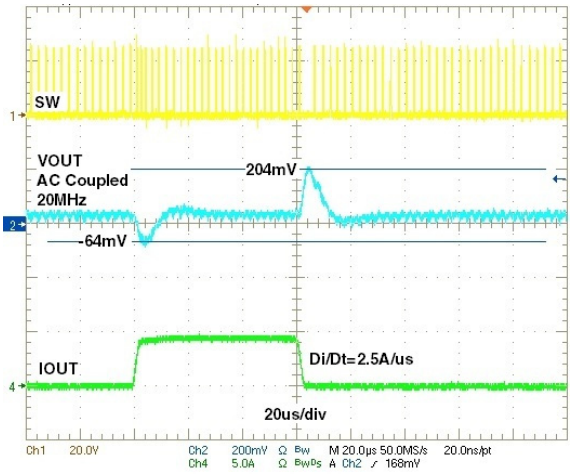

Figure 17: Load Step, Forced CCM, 0A - 4A - 0A

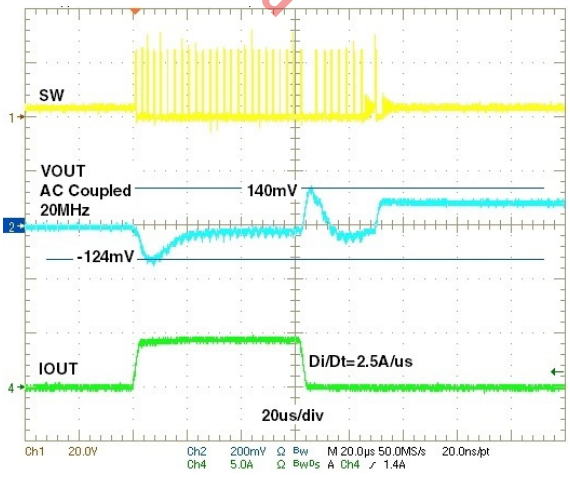

Figure 18: Load Step, DCM / CCM, 0A - 4A - 0A

The product (or products) mentioned in this data sheet are no longer being manufactured and may not be ordered (OBS)

Efficiency

Unless otherwise noted: $T_{AMBIENT}$ = 25°C, no air flow, f = 400kHz, inductor losses are included, the schematic is from the Application Information section.

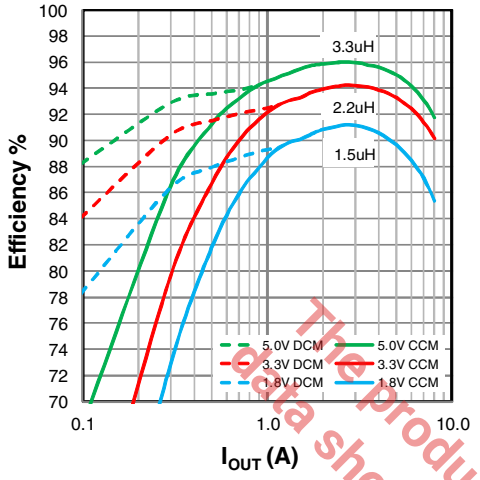

Figure 19: XR76208-Q Efficiency, V_{IN} = 12V

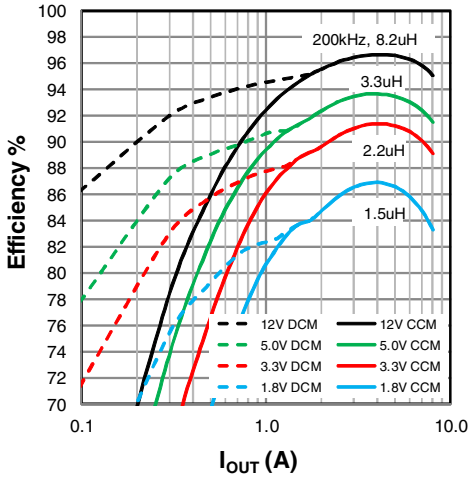

Figure 20: XR76208-Q Efficiency, V_{IN} = 24V

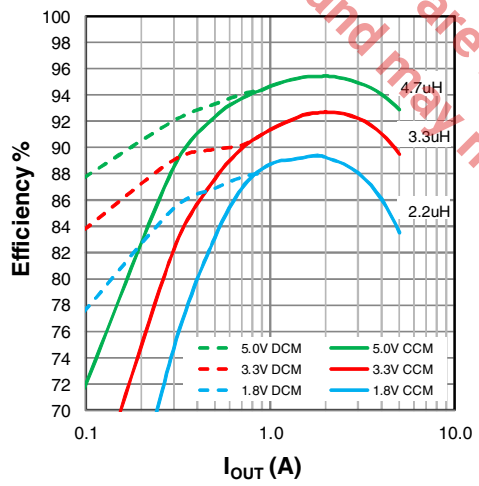

Figure 21: XR76205-Q Efficiency, V_{IN} = 12V

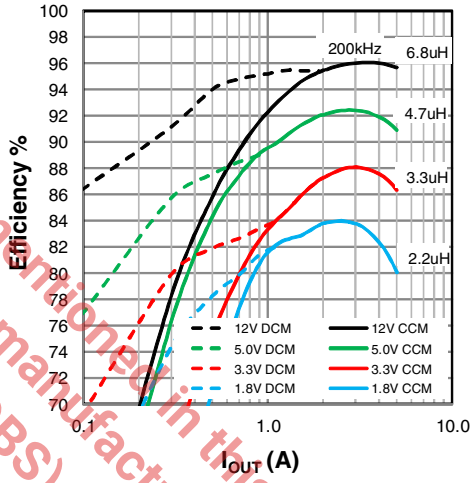

Figure 22: XR76205-Q Efficiency, V_{IN} = 24V

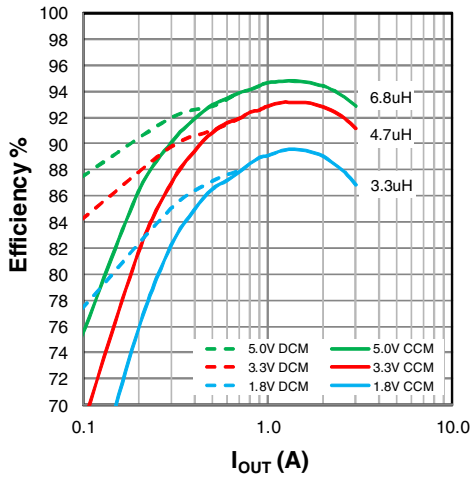

Figure 23: XR76203-Q Efficiency, V_{IN} = 12V

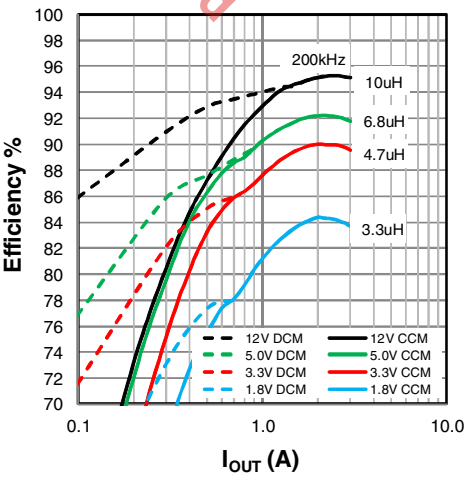

Figure 24: XR76203-Q Efficiency, V_{IN} = 24V

The product (or products) mentioned in this data sheet are no longer being manufactured and may not be ordered (OBS)

Thermal Derating

Unless otherwise noted: no air flow, f = 400kHz, the schematic is from the Application Information section.

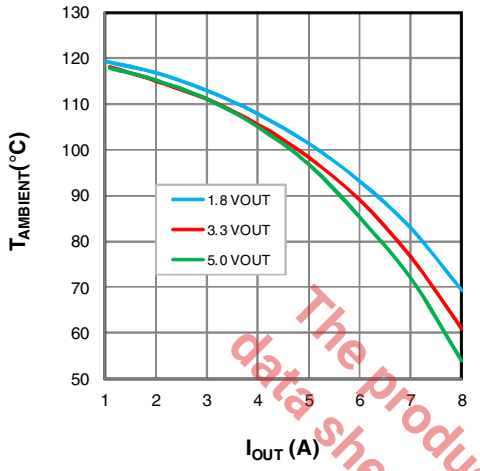

Figure 25: XR76208-Q, V_{IN} = 12V

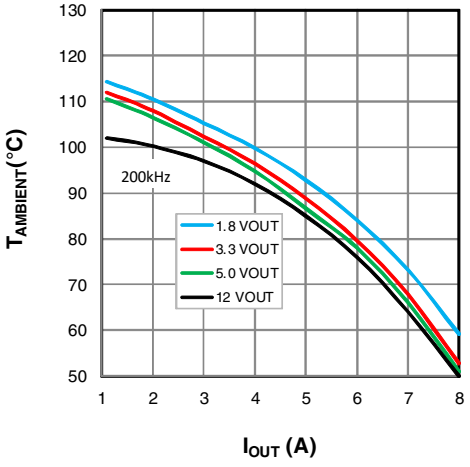

Figure 26: XR76208-Q, V_{IN} = 24V

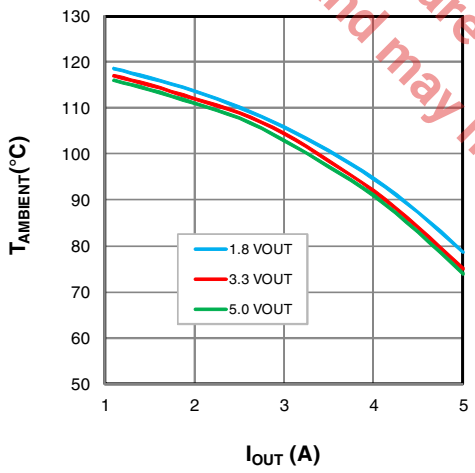

Figure 27: XR76205-Q, V_{IN} = 12V

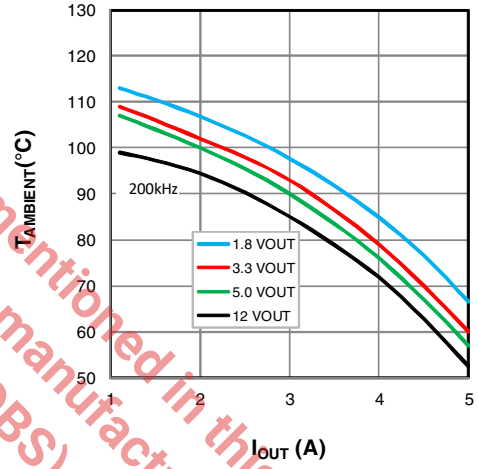

Figure 28: XR76205-Q, V_{IN} = 24V

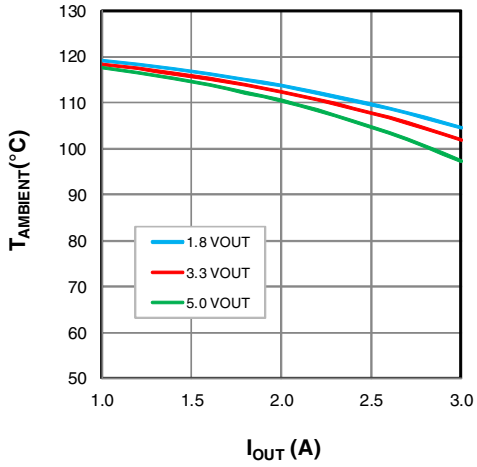

Figure 29: XR76203-Q, V_{IN} = 12V

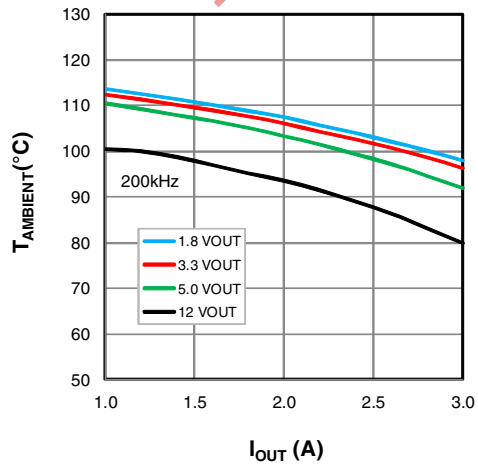

Figure 30: XR76203-Q, V_{IN} = 24V

The product (or products) mentioned in this data sheet are no longer being manufactured and may not be ordered (OBS)

Functional Description

XR76203-Q, XR76205-Q and XR76208-Q are synchronous step-down, proprietary emulated current-mode Constant On-Time (COT) regulators. The on-time, which is programmed via R_{ON}, is inversely proportional to V_{IN} and maintains a nearly constant frequency. The emulated current-mode control is stable with ceramic output capacitors.

Each switching cycle begins with GH signal turning on the high-side (control) FET for a preprogrammed time. At the end of the on-time, the high-side FET is turned off and the low-side (synchronous) FET is turned on for a preset minimum time (250ns nominal). This parameter is termed Minimum Off-Time. After the Minimum Off-Time, the voltage at the feedback pin FB is compared to an internal voltage ramp at the feedback comparator. When V_{FB} drops below the ramp voltage, the high-side FET is turned on and the cycle repeats. This voltage ramp constitutes an emulated current ramp and makes possible the use of ceramic capacitors, in addition to other capacitor types, for output filtering.

Enable / Mode Input (EN/MODE)

The EN/MODE pin accepts a tri-level signal that is used to control turn on / off. It also selects between two modes of operation: 'Forced CCM' and 'DCM / CCM'. If EN/MODE is pulled below 1.8V, the regulator shuts down. A voltage between 2.0V and 2.8V selects the Forced CCM mode, which will run the regulator in continuous conduction at all times. A voltage higher than 3.1V selects the DCM / CCM mode, which will run the regulator in discontinuous conduction at light loads.

Selecting the Forced CCM Mode

In order to set the regulator to operate in Forced CCM, a voltage between 2.0V and 2.8V must be applied to EN/MODE. This can be achieved with an external control signal that meets the above voltage requirement. Where an external control is not available, the EN/MODE can be derived from V_{IN}. If V_{IN} is well regulated, use a resistor divider and set the voltage to 2.5V. If V_{IN} varies over a wide range, the circuit shown in Fgure 31 can be used to generate the required voltage. Note that at V_{IN} of 5.5V and 40V, the nominal Zener voltage is 4.0V and 5.0V respectively. Therefore for V_{IN} in the range of 5.5V to 40V, the circuit shown in Figure 31 will generate V_{EN} required for Forced CCM.

Selecting the DCM / CCM Mode

In order to set the regulator operation to DCM / CCM, a voltage between 3.1V and 5.5V must be applied to EN/MODE pin. If an external control signal is available, it can be directly connected to EN/MODE. In applications where an external control is not available, EN/MODE input can be derived from V_{IN}. If V_{IN} is well regulated, use a resistor divider and set the voltage to 4V. If V_{IN} varies over a wide range, the circuit shown in Figure 32 can be used to generate the required voltage.

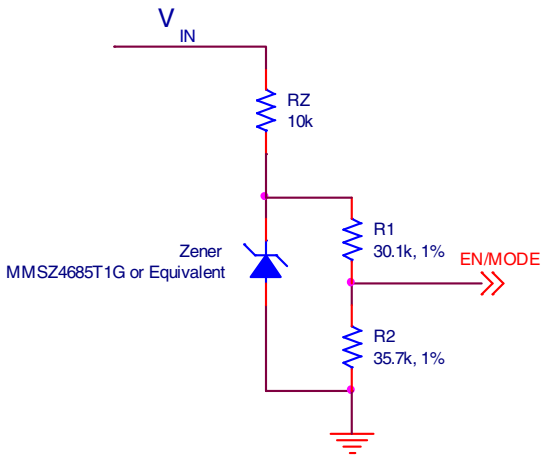

Figure 31: Selecting Forced CCM by Deriving EN/MODE from V_{IN}

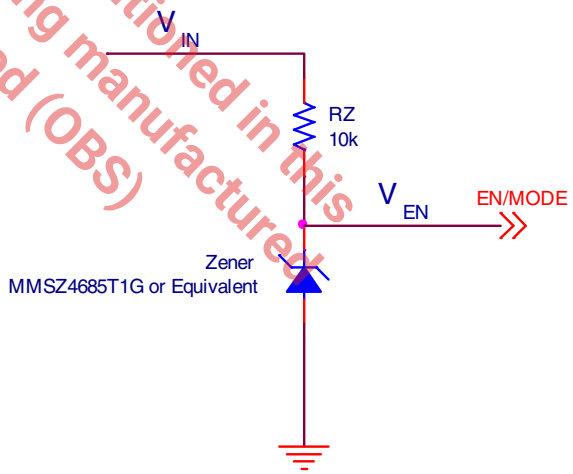

Figure 32: Selecting DCM/CCM by Deriving EN/MODE from V_{IN}

The product (or product(s) mentioned in this data sheet) are no longer being manufactured and may not be ordered (OBS)

Programming the On-Time

The on-time T_{ON} is programmed via resistor R_{ON} according to following equation:

$$R_{ON} = \frac{V_{IN} \times [T_{ON} - (25 \times 10^{-9})]}{3.05 \times 10^{-10}}$$

where T_{ON} is calculated from:

$$T_{ON} = \frac{V_{OUT}}{V_{IN} \times f \times Eff}$$

where:

f is the desired switching frequency at nominal I_{OUT}

Eff is the regulator efficiency corresponding to nominal I_{OUT} shown in Figures 19 - 24

Substituting for T_{ON} in the first equation, we get:

$$R_{ON} = \frac{\left(\frac{V_{OUT}}{f \times Eff}\right) - [(25 \times 10^{-9}) \times V_{IN}]}{3.05 \times 10^{-10}}$$

Over-Current Protection (OCP)

If load current exceeds the programmed over-current I_{OCP}, for four consecutive switching cycles, the regulator enters the hiccup mode of operation. In the hiccup mode, the MOSFET gates are turned off for 110ms (hiccup timeout). Following the hiccup timeout, a soft-start is attempted. If OCP persists, the hiccup timeout will repeat. The regulator will remain in hiccup mode until load current is reduced below the programmed I_{OCP} . In order to program the over-current protection, use the following equation:

$$RLIM = \frac{(I_{OCP} \times RDS) + 8mV}{ILIM}$$

Where:

RLIM is resistor value for programming I_{OCP}

I_{OCP} is the over-current threshold to be programmed

RDS is the MOSFET rated On Resistance; XR76208-Q = 21.5mΩ, XR76205-Q = 59mΩ, XR76203-Q = 59mΩ

8mV is the OCP comparator maximum offset

ILIM is the internal current that generates the necessary OCP comparator threshold (use 45µA)

Note that ILIM has a positive temperature coefficient of 0.4%/°C (Figure 10). This is meant to roughly match and compensate for the positive temperature coefficient of the synchronous FET. A graph of typical I_{OCP} versus RLIM is shown in Figures 7-9. The maximum allowable RLIM for XR76205-Q is 8.06kΩ.

Short-Circuit Protection (SCP)

If the output voltage drops below 60% of its programmed value, the regulator will enter hiccup mode. The hiccup will persist until the short-circuit is removed. The SCP circuit becomes active after PGOOD asserts high.

Over-Temperature (OTP)

OTP triggers at a nominal die temperature of 150°C. The gate of the switching FET and synchronous FET are turned off. When die temperature cools down to 135°C, soft-start is initiated and operation resumes.

Programming the Output Voltage

Use an external voltage divider as shown in the Application Circuit to program the output voltage V_{OUT}.

$$R1 = R2 \times \left(\frac{V_{OUT}}{0.6} - 1\right)$$

where R2 has a nominal value of 2kΩ.

Programming the Soft-Start

Place a capacitor C_{SS} between the SS and AGND pins to program the soft-start. In order to program a soft-start time of t_{SS}, calculate the required capacitance C_{SS} from the following equation:

$$C_{SS} = t_{SS} \times \left(\frac{10\mu A}{0.6V}\right)$$

The product (or products) mentioned in this data sheet are no longer being manufactured and may not be ordered (OBS)

Feed-Forward Capacitor (C_{FF})

A feed-forward capacitor (C_{FF}) may be necessary, depending on the Equivalent Series Resistance (ESR) of C_{OUT}. If only ceramic output capacitors are used for C_{OUT}, then a C_{FF} is necessary. Calculate C_{FF} from:

$$C_{FF} = \frac{1}{2 \times \pi \times R1 \times 7 \times f_{LC}}$$

where:

R1 is the resistor that C_{FF} is placed in parallel with

f_{LC} is the frequency of output filter double-pole

f_{LC} frequency must be less than 11kHz when using ceramic C_{OUT}. If necessary, increase L and / or C_{OUT} in order to meet this constraint.

When using capacitors with higher ESR such as PANASONIC TPE series, a C_{FF} is not required, provided the following conditions are met:

1. The frequency of output filter LC double-pole f_{LC} should be less than 11kHz.

2. The frequency of ESR Zero $f_{Zero,ESR}$ should be at least five times larger than f_{LC}.

Note that if $f_{Zero,ESR}$ is less than $5xf_{LC}$, then it is recommended to set the f_{LC} at less than 2kHz. C_{FF} is still not required.

Maximum Allowable Voltage Ripple at FB pin

Note that the steady-state voltage ripple at feedback pin FB ($V_{FB,RIPPLE}$) must not exceed 50mV in order for the regulator to function correctly. If $V_{FB,RIPPLE}$ is larger than 50mV, then C_{OUT} should be increased as necessary in order to keep the $V_{FB,RIPPLE}$ below 50mV.

Feed-Forward Resistor (R_{FF})

Poor PCB layout can cause FET switching noise at the output and may couple to the FB pin via C_{FF}. Excessive noise at FB will cause poor load regulation. To solve this problem place a resistor R_{FF} in series with C_{FF}. An R_{FF} value up to 2% of R1 is acceptable.

The product (or products) mentioned in this data sheet are no longer being manufactured and may not be ordered (OBS)

Application Circuit, XR76208-Q

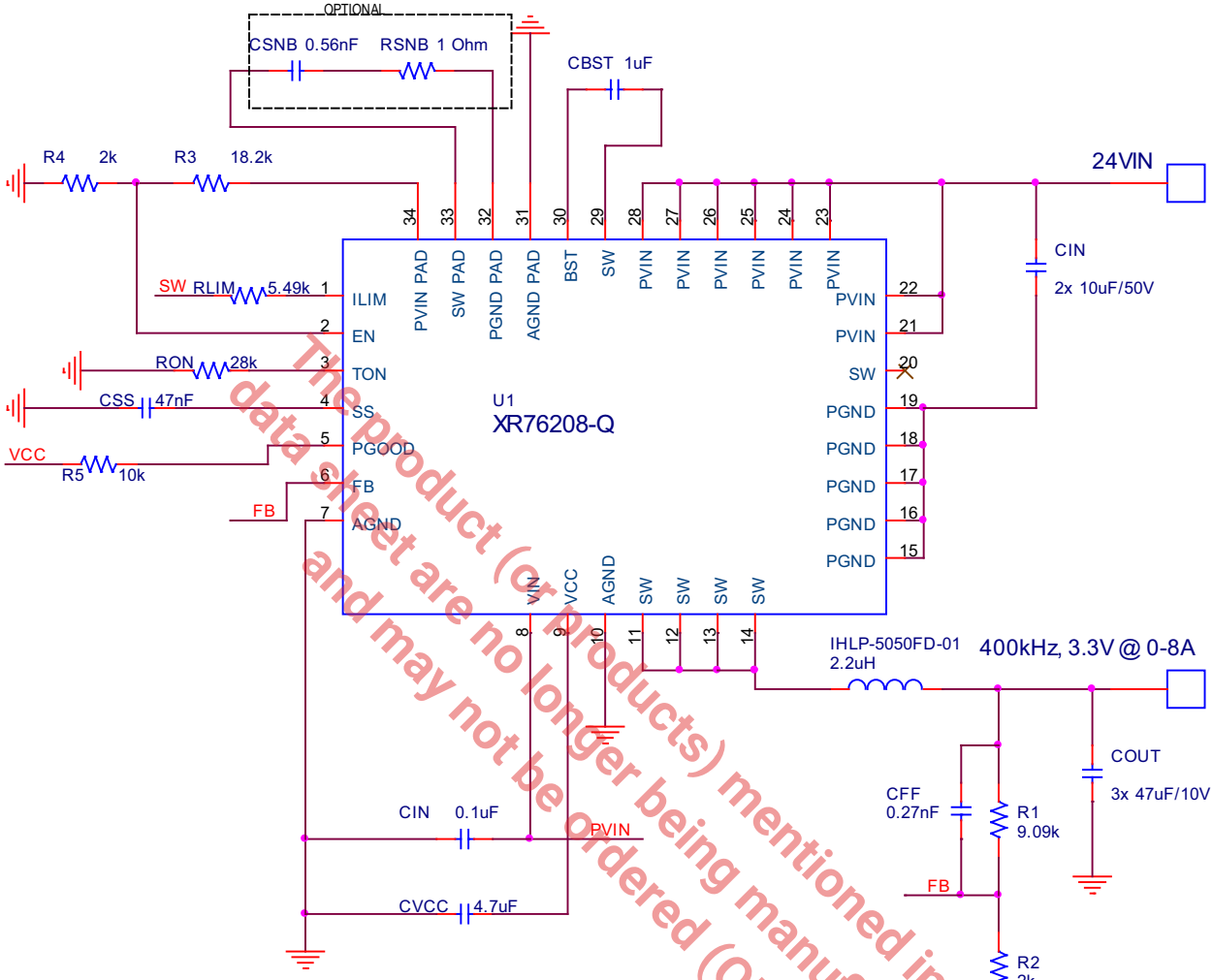

The product (or products) mentioned in this data sheet are no longer being manufactured and may not be ordered (OBS)

Application Circuit, XR76205-Q

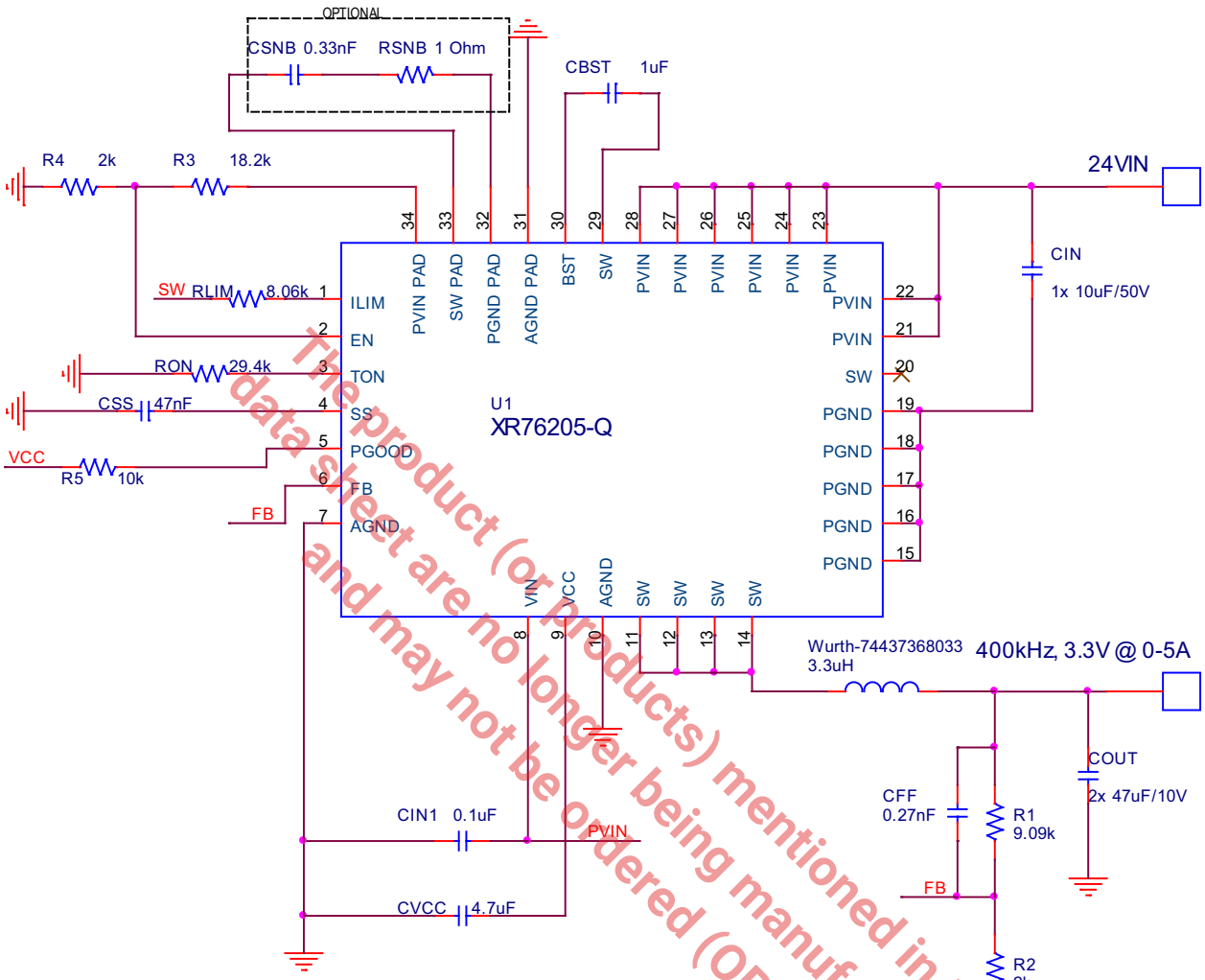

The product (or products) mentioned in this data sheet are no longer being manufactured and may not be ordered (OBS)

Application Circuit, XR76203-Q

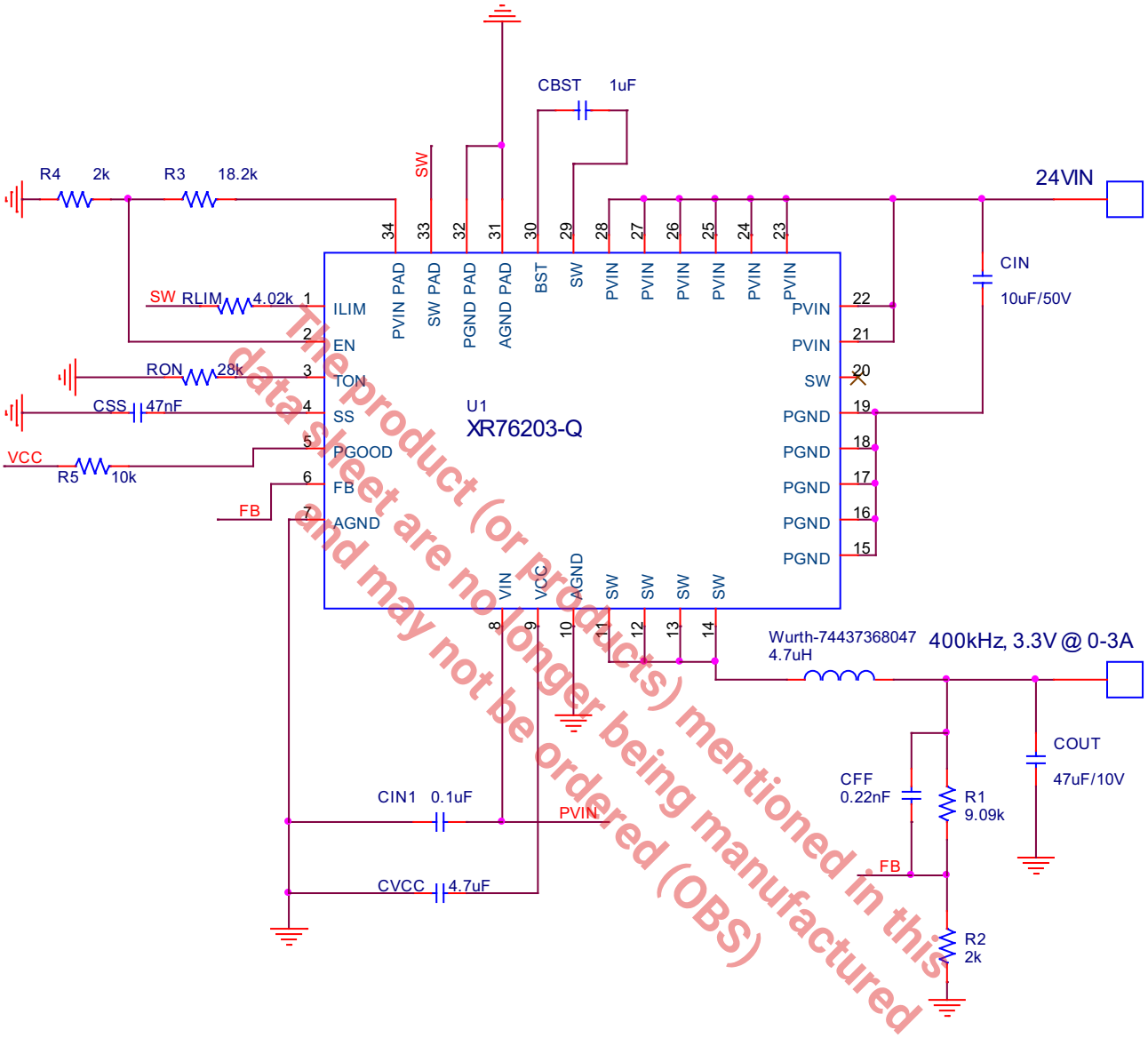

The product (or products) mentioned in this data sheet are no longer being manufactured and may not be ordered (OBS)

Mechanical Dimensions

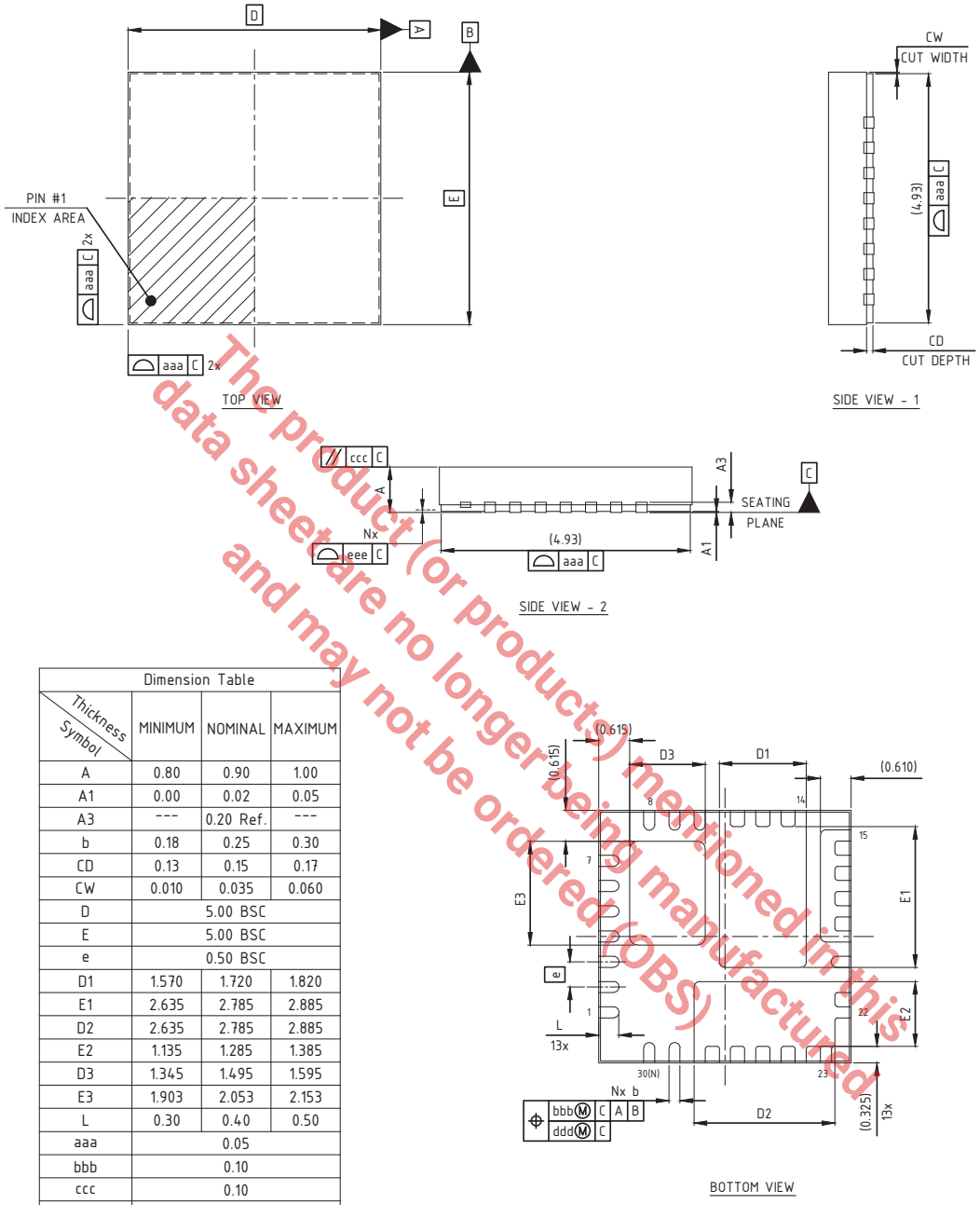

Dimension Table			
Thickness / Symbol	MINIMUM	NOMINAL	MAXIMUM
A	0.80	0.90	1.00
A1	0.00	0.02	0.05
A3	---	0.20 Ref.	---
b	0.18	0.25	0.30
CD	0.13	0.15	0.17
CW	0.010	0.035	0.060
D	5.00 BSC		
E	5.00 BSC		
e	0.50 BSC		
D1	1.570	1.720	1.820
E1	2.635	2.785	2.885
D2	2.635	2.785	2.885
E2	1.135	1.285	1.385
D3	1.345	1.495	1.595
E3	1.903	2.053	2.153
L	0.30	0.40	0.50
aaa	0.05		
bbb	0.10		
ccc	0.10		
ddd	0.05		
eee	0.08		
N	30		

TERMINAL DETAIL

NOTE : ALL DIMENSIONS ARE IN MILLIMETERS, ANGLES ARE IN DEGREES.

Drawing No.: POD-00000093

Revision: B

The product (or product(s) mentioned in this data sheet) are no longer being manufactured and may not be ordered (OBS)

Recommended Land Pattern and Stencil

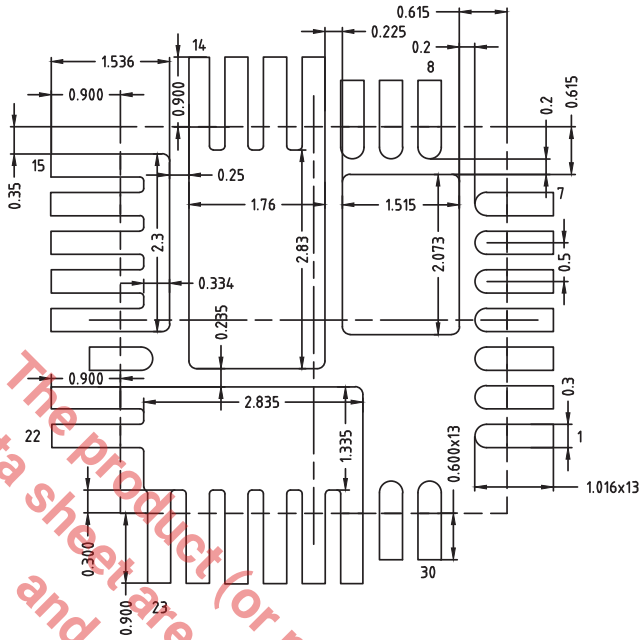

TYPICAL RECOMMENDED LAND PATTERN

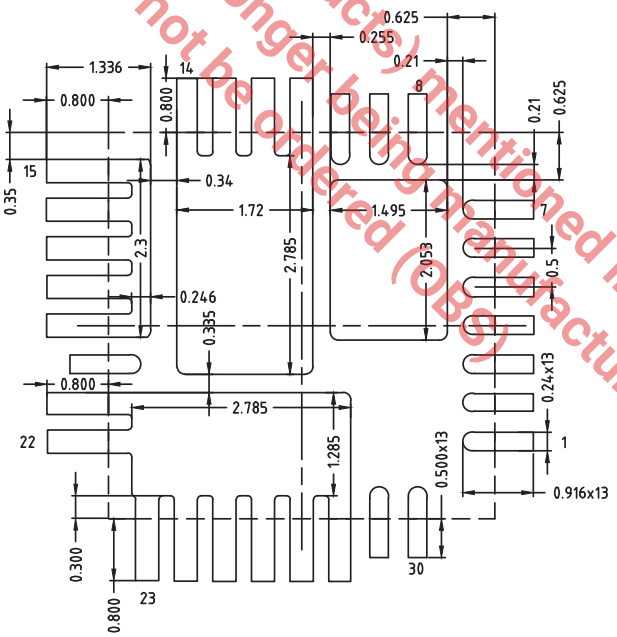

TYPICAL RECOMMENDED STENCIL

NOTE : ALL DIMENSIONS ARE IN MILLIMETERS, ANGLES ARE IN DEGREES.

Drawing No.: POD-00000093

Revision: B

The product (or products) mentioned in this data sheet are no longer being manufactured and may not be ordered (OBS)

Ordering Information[1]

Part Number	Operating Temperature Range	Package	Packaging Method	Lead-Free[2]
XR76208-Q				
XR76208EL-Q	-40°C ≤ T_J ≤ 125°C	5x5mm QFN	Tray	Yes
XR76208ELTR-Q	-40°C ≤ T_J ≤ 125°C	5x5mm QFN	Tape and Reel	Yes
XR76208EVB-Q	XR76208-Q Evaluation Board			
XR76205-Q				
XR76205EL-Q	-40°C ≤ T_J ≤ 125°C	5x5mm QFN	Tray	Yes
XR76205ELTR-Q	-40°C ≤ T_J ≤ 125°C	5x5mm QFN	Tape and Reel	Yes
XR76205EVB-Q	XR76205-Q Evaluation Board			
XR76203-Q				
XR76203EL-Q	-40°C ≤ T_J ≤ 125°C	5x5mm QFN	Tray	Yes
XR76203ELTR-Q	-40°C ≤ T_J ≤ 125°C	5x5mm QFN	Tape and Reel	Yes
XR76203EVB-Q	XR76203-Q Evaluation Board			

Notes:

1. Refer to www.maxlinear.com/XR76203-Q, www.maxlinear.com/XR76205-Q, and www.maxlinear.com/XR76208-Q for most up-to-date Ordering Information.

2. Visit www.maxlinear.com for additional information on Environmental Rating.

The product (or products) mentioned in this data sheet are no longer being manufactured and may not be ordered (OBS)

Revision History

Revision	Date	Description
1A	January 2017	Initial Release
1B	March 2017	Removed preliminary from XR76203-Q
1C	March 2017	Removed preliminary from XR76208-Q
1D	June 2018	Updated to MaxLinear logo. Updated format and Ordering Information table. Added recommended land pattern and stencil.
1E	October 2019	Correct block diagram by changing the input gate into the Hiccup Mode from an AND gate to an OR gate. Updated Ordering Information.

The product (or products) mentioned in this data sheet are no longer being manufactured and may not be ordered (OBS)

Corporate Headquarters:
5966 La Place Court
Suite 100
Carlsbad, CA 92008
Tel.:+1 (760) 692-0711
Fax: +1 (760) 444-8598
www.maxlinear.com

The content of this document is furnished for informational use only, is subject to change without notice, and should not be construed as a commitment by MaxLinear, Inc. MaxLinear, Inc. assumes no responsibility or liability for any errors or inaccuracies that may appear in the informational content contained in this guide. Complying with all applicable copyright laws is the responsibility of the user. Without limiting the rights under copyright, no part of this document may be reproduced into, stored in, or introduced into a retrieval system, or transmitted in any form or by any means (electronic, mechanical, photo copying, recording, or otherwise), or for any purpose, without the express written permission of MaxLinear, Inc.

Maxlinear, Inc. does not recommend the use of any of its products in life support applications where the failure or malfunction of the product can reasonably be expected to cause failure of the life support system or to significantly affect its safety or effectiveness. Products are not authorized for use in such applications unless MaxLinear, Inc. receives, in writing, assurances to its satisfaction that: (a) the risk of injury or damage has been minimized; (b) the user assumes all such risks; (c) potential liability of MaxLinear, Inc. is adequately protected under the circumstances.

MaxLinear, Inc. may have patents, patent applications, trademarks, copyrights, or other intellectual property rights covering subject matter in this document. Except as expressly provided in any written license agreement from MaxLinear, Inc., the furnishing of this document does not give you any license to these patents, trademarks, copyrights, or other intellectual property.

MaxLinear, the MaxLinear logo, and any MaxLinear trademarks, MxL, Full-Spectrum Capture, FSC, G.now, AirPHY and the MaxLinear logo are all on the products sold, are all trademarks of MaxLinear, Inc. or one of MaxLinear's subsidiaries in the U.S.A. and other countries. All rights reserved. Other company trademarks and product names appearing herein are the property of their respective owners.

© 2016 - 2019 MaxLinear, Inc. All rights reserved