ENVISIONING • EMPOWERING • EXCELLING

The product(s) mentioned in this data sheet are no longer being manufactured and may not be ordered (OBS)

This document has been made public and no NDA is needed.

The "Confidential" statement in the attached material is no longer valid and may be disregarded.

This document falls into one of these categories:

1. **Document has MaxLinear branding**
   The "MaxLinear Confidential" statement will be removed from the document upon its next revision
2. **Document has non-MaxLinear branding**
   In 2020, MaxLinear acquired the Connected Home Division business of Intel Corporation, including the former Intel® product/s referenced in the title of the attached material. The MaxLinear logo will be added to the attached material upon its next revision. MaxLinear is now the manufacturer of this product.

Direct any questions and product support requests to your MaxLinear sales contact, MaxLinear Sales Representative or Distributor, or login to your myMxL account and create a new support ticket.

The product (or products) mentioned in this data sheet are no longer being manufactured and may not be ordered (OBS)

MaxLinear

Corporate Headquarters:
5966 La Place Court
Suite 100
Carlsbad, CA 92008
Tel.:+1 (760) 692-0711
Fax: +1 (760) 444-8598
www.maxlinear.com

The content of this document is furnished for informational use only, is subject to change without notice, and should not be construed as a commitment by MaxLinear, Inc. MaxLinear, Inc. assumes no responsibility or liability for any errors or inaccuracies that may appear in the informational content contained in this guide. Complying with all applicable copyright laws is the responsibility of the user. Without limiting the rights under copyright, no part of this document may be reproduced into, stored in, or introduced into a retrieval system, or transmitted in any form or by any means (electronic, mechanical, photocopying, recording, or otherwise), or for any purpose, without the express written permission of MaxLinear, Inc.

Maxlinear, Inc. does not recommend the use of any of its products in life support applications where the failure or malfunction of the product can reasonably be expected to cause failure of the life support system or to significantly affect its safety or effectiveness. Products are not authorized for use in such applications unless MaxLinear, Inc. receives, in writing, assurances to its satisfaction that: (a) the risk of injury or damage has been minimized; (b) the user assumes all such risks; (c) potential liability of MaxLinear, Inc. is adequately protected under the circumstances.

MaxLinear, Inc. may have patents, patent applications, trademarks, copyrights, or other intellectual property rights covering subject matter in this document. Except as expressly provided in any written license agreement from MaxLinear, Inc., the furnishing of this document does not give you any license to these patents, trademarks, copyrights, or other intellectual property.

MaxLinear, the MaxLinear logo, and any MaxLinear trademarks, MxL, Full-Spectrum Capture, FSC, G.now, AirPHY, Puma, AnyWAN and the MaxLinear logo are all on the products sold, are all trademarks of MaxLinear, Inc. or one of MaxLinear's subsidiaries in the U.S.A. and other countries. All rights reserved. Other company trademarks and product names appearing herein are the property of their respective owners.

© 2022 MaxLinear, Inc. All rights reserved.

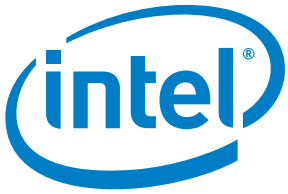

Intel® Ethernet Network Connection

The product (or products) mentioned in this data sheet are no longer being manufactured and may not be ordered (OBS)

GPY112 (PEF7072HLV16)

User's Manual

Hardware Description

Revision 1.3, 2018-08-29
Reference ID 618157

Legal Notice

No license (express or implied, by estoppel or otherwise) to any intellectual property rights is granted by this document. Intel disclaims all warranties, including without limitation, the implied warranties of merchantability, fitness for a particular purpose, and non-infringement, as well as any warranty arising from course of performance, course of dealing, or usage in trade.

All information provided here is subject to change without notice. Intel may make changes to its test conditions and internal reliability goals at any time. Contact your Intel representative to obtain the latest Intel product specifications and road-maps.

The products described may contain design defects or errors known as errata which may cause the product to deviate from published specifications. Current characterized errata are available on request.

Software and workloads used in performance tests may have been optimized for performance only on Intel microprocessors. Performance tests, such as SYSmark and MobileMark, are measured using specific computer systems, components, software, operations and functions. Any change to any of those factors may cause the results to vary. You should consult other information and performance tests to assist you in fully evaluating your contemplated purchases, including the performance of that product when combined with other products.

Intel, the Intel logo, AnyWAN, Intel Atom, Celeron, Intel CONVERGATE, Intel Core, Pentium, Puma, Intel SICOFI, and Intel Xeon are trademarks of Intel Corporation or its subsidiaries in the U.S. and/or other countries.

*Other names and brands may be claimed as the property of others.

© Intel Corporation

The product(s) mentioned in this data sheet are no longer being manufactured and may not be ordered (OBS)

Revision History

Current:	**Revision 1.3, 2018-08-29**
Previous:	**Revision 1.2, 2018-03-21**

Page	Major changes since previous revision
All	Removed the 125 MHz clock output (CLKOUT) support.

The product (or products) mentioned in this data sheet are no longer being manufactured and may not be ordered (OBS)

Table of Contents

Table of Contents . . . 4

List of Figures . . . 8

List of Tables . . . 10

1 Introduction . . . 12
1.1 About Intel® Ethernet Network Connection GPY112 . . . 12
1.2 Overview . . . 13
1.2.1 Logic Symbol . . . 13
1.2.2 Features . . . 14
1.2.3 Typical Applications . . . 15
1.2.3.1 Copper Application . . . 15
1.2.3.2 Fiber Application . . . 15
1.2.3.3 Media Converter Application . . . 15
1.2.3.4 Dual-Media Application . . . 16
1.2.3.5 Gigabit Interface Converter (GBIC) Application . . . 16
1.2.4 Terminology and Nomenclature . . . 17

2 External Signals . . . 18
2.1 Pin Diagram . . . 18
2.2 Pin Description . . . 19
2.2.1 Pin Identifications . . . 19
2.2.2 General Pins . . . 20
2.2.3 Media-Dependent Interface (MDI) Pins . . . 21
2.2.4 Media-Independent Interface (MII) Pins . . . 22
2.2.5 Control Interface Pins . . . 34
2.2.6 JTAG Interface . . . 35
2.2.7 Power Supply Pins . . . 36

3 Functional Description . . . 37
3.1 Modes of Operation . . . 37
3.1.1 Copper Flow . . . 38
3.1.2 Fiber Flow . . . 38
3.1.3 Media Converter Flow . . . 38
3.1.4 Dual-Media Flow . . . 38
3.2 Media-Independent Interfaces (MII) . . . 38
3.2.1 X-speed Media-Independent Interface (xMII) . . . 38
3.2.1.1 xMII Signal Multiplexing . . . 38
3.2.1.2 xMII Signal Conditioning . . . 40
3.2.2 Reduced Media-Independent Interface (RMII) . . . 41
3.2.3 Gigabit Media-Independent Interface (GMII) . . . 41
3.2.4 Reduced Gigabit Media-Independent Interface (RGMII) . . . 42
3.2.5 Serial Gigabit Media-Independent Interface (SGMII) . . . 44
3.3 Media Functions . . . 45
3.3.1 Media-Dependent Interfaces (MDI) . . . 45
3.3.1.1 Copper Interface . . . 45
3.3.1.2 Fiber Interface . . . 46
3.3.2 Auto-Negotiation . . . 46
3.3.3 Auto-Downspeed . . . 47
3.3.4 Auto-Crossover and Polarity-Reversal Correction . . . 47
3.4 Configuration, Control and Status Functions . . . 48

The product (or products) mentioned in this data sheet are no longer being manufactured and may not be ordered (OBS)

3.4.1 Configuration of GPY112 via Pin-Strapping . . . 50
3.4.2 Configuration of GPY112 via External EEPROM . . . 56
3.4.2.1 EEPROM Applications . . . 56
3.4.2.2 EEPROM Detection . . . 56
3.4.2.3 EEPROM Content . . . 57
3.4.2.4 EEPROM Frame Formats . . . 58
3.4.2.4.1 Frame Formats in 11-Bit Addressing Mode . . . 58
3.4.2.4.2 Frame Formats in 16-Bit Addressing Mode . . . 60
3.4.2.4.3 EEPROM Access via MDIO . . . 62
3.4.3 Configuration and Control Via MDIO . . . 65
3.4.3.1 MDIO Interface . . . 65
3.4.3.2 MDIO Address Space . . . 66
3.4.3.3 MDIO Interrupt . . . 68
3.4.4 LED Interface . . . 69
3.4.4.1 Single Color LED Mode . . . 69
3.4.4.2 Bi-Color LED Mode . . . 70
3.4.4.3 LED Operations . . . 71
3.4.4.3.1 LED Externally Controlled Mode (ECM) . . . 71
3.4.4.3.2 LED Functions in Internally Controlled Mode (ICM) . . . 71
3.4.4.3.3 LED Configuration in ICM . . . 72
3.5 Power Management . . . 74
3.5.1 Power Supply . . . 74
3.5.1.1 Power Supply Using Integrated Switching Regulator . . . 74
3.5.1.2 Power Supply Without Using Integrated Switching Regulator . . . 75
3.5.2 Power Over Ethernet (PoE) . . . 76
3.5.2.1 Powered Device (PD) . . . 76
3.5.2.2 Power Sourcing Equipment (PSE) . . . 76
3.5.3 Energy-Efficient Ethernet . . . 77
3.5.3.1 EEE for 10BASE-Te . . . 77
3.5.3.2 EEE for 100BASE-TX . . . 77
3.5.3.3 EEE for 1000BASE-T . . . 78
3.5.3.4 Auto-Negotiation for EEE Modes . . . 78
3.5.4 Wake-on-LAN (WoL) . . . 78
3.5.5 Power Down Modes . . . 81
3.5.5.1 PD_FORCE Mode . . . 82
3.5.5.2 ANEG Mode . . . 83
3.5.5.3 PD_IDLE Mode . . . 83
3.5.5.4 DATA Mode . . . 83
3.5.5.5 EEE Mode . . . 83
3.6 Testing Functions . . . 84
3.6.1 JTAG Interface . . . 84
3.6.2 Payload Data Tests . . . 85
3.6.2.1 Test Packet Generator (TPG) . . . 85
3.6.2.2 Error Counters . . . 86
3.6.3 Test Loops . . . 86
3.6.3.1 Near-End Test Loops . . . 86
3.6.3.1.1 MAC Interface Test Loop . . . 86
3.6.3.1.2 MDI Test Loop . . . 87
3.6.3.1.3 Echo Test Loop . . . 87
3.6.3.2 Far-End Test Loop . . . 88
4 MDIO Registers . . . 89

The product(s) mentioned in this data sheet are no longer being manufactured and may not be ordered (OBS)

4.1 STD: Standard Management Registers . . . 92
4.2 PHY: PHY-Specific Management Registers . . . 114

5 MMD Registers . . . 142
5.1 EEE: Standard EEE Registers for MMD=0x03 . . . 144
5.2 ANEG: Standard Auto-Negotiation Registers for MMD=0x07 . . . 148
5.3 EEPROM: EEPROM Address Space (MMD=0x1E) . . . 151
5.4 INTERNAL: Internal Address Space (MMD=0x1F) . . . 152

6 Electrical Characteristics . . . 164
6.1 Absolute Maximum Ratings . . . 164
6.2 Operating Range . . . 165
6.3 Recommended Operating Conditions . . . 165
6.4 Power-Up Sequence . . . 165
6.5 DC Characteristics . . . 166
6.5.1 Digital Interfaces . . . 166
6.5.1.1 GPIO Interfaces . . . 166
6.5.1.2 MII Receive Interface . . . 167
6.5.1.3 MII Transmit Interface . . . 167
6.5.1.4 LED Interface . . . 167
6.5.1.5 JTAG Interface . . . 168
6.5.2 Twisted-Pair Interface . . . 168
6.5.3 SGMII Interface . . . 168
6.5.4 1000BASE-X Interface . . . 168
6.6 AC Characteristics . . . 169
6.6.1 Reset . . . 169
6.6.2 Power Supply . . . 170
6.6.3 Input Clock . . . 170
6.6.4 Output Clock . . . 171
6.6.5 MDIO Interface . . . 171
6.6.6 MII Interface . . . 172
6.6.6.1 Transmit Timing Characteristics . . . 172
6.6.6.2 Receive Timing Characteristics . . . 173
6.6.7 RMII Interface . . . 174
6.6.8 GMII Interface . . . 177
6.6.8.1 Transmit Timing Characteristics . . . 177
6.6.8.2 Receive Timing Characteristics . . . 178
6.6.9 RGMII Interface . . . 179
6.6.9.1 Transmit Timing Characteristics . . . 179
6.6.9.2 Receive Timing Characteristics . . . 180
6.6.10 SGMII Interface . . . 182
6.6.10.1 Transmit Timing Characteristics . . . 182
6.6.10.2 Receive Timing Characteristics . . . 183
6.6.11 1000BASE-X Interface . . . 184
6.6.11.1 Transmit Timing Characteristics . . . 184
6.6.11.2 Receive Timing Characteristics . . . 185
6.6.12 Twisted-Pair Interface . . . 185
6.7 Power Consumption . . . 186
6.8 Isolation Requirements . . . 186
6.9 External Circuitry . . . 187
6.9.1 Crystal . . . 187
6.9.2 LED . . . 188

The product (or products) mentioned in this data sheet are no longer being manufactured and may not be ordered (OBS)

6.9.3 Transformer (Magnetics) . . . 189
6.9.4 RJ45 Plug . . . 190
6.9.5 Twisted-Pair Common-Mode Rejection and Termination Circuitry . . . 191
6.9.6 SGMII Interface . . . 192
6.9.7 1000BASE-X Interface . . . 194
6.10 JTAG Interface Timing . . . 195

7 Package . . . 196
7.1 Package Outline . . . 196
7.2 Chip Identification and Package Naming . . . 197
7.3 Thermal Resistance . . . 198

References . . . 199

Terminology . . . 200

The product (or products) mentioned in this data sheet are no longer being manufactured and may not be ordered (OBS)

List of Figures

Figure 1 Logic Symbol of the GPY112 . . . 13
Figure 2 GPY112 Used in Copper Applications . . . 15
Figure 3 GPY112 Used in Fiber Applications . . . 15
Figure 4 GPY112 Used in Media Converter Applications . . . 16
Figure 5 GPY112 Used in Dual-Media Application with a Fiber Module . . . 16
Figure 6 GPY112 Used in 10/100/1000BASE-T GBIC Application . . . 17
Figure 7 Transmit and Receive Terminology . . . 17
Figure 8 Pin Diagram of the GPY112 (Top View of PG-LQFP-64 Package) . . . 18
Figure 9 Functional High-Level Block Diagram of GPY112 . . . 37
Figure 10 xMII Signal Conditioning between MAC and GPY112 . . . 41
Figure 11 Twisted-Pair Interface of GPY112 Including Transformer and RJ45 Plug . . . 45
Figure 12 Overview of the Configuration Flow . . . 49
Figure 13 Soft Pin-Strapping External Circuitry . . . 50
Figure 14 Timing Diagram for a Random Address Single Byte Write . . . 59
Figure 15 Timing Diagram for a Random Address Single Byte Read . . . 60
Figure 16 Timing Diagram for a Burst Read . . . 60
Figure 17 Timing Diagram for a Random Address Single Byte Write . . . 61
Figure 18 Timing Diagram for a Random Address Single Byte Read . . . 62
Figure 19 Timing Diagram for a Burst Read . . . 62
Figure 20 Flow-Chart for an Indirect EEPROM Write Cycle Via MDIO-MMD Access . . . 63
Figure 21 Flow-Chart for an Indirect EEPROM Read Cycle Via MDIO-MMD Access . . . 64
Figure 22 MDIO Write Frame . . . 65
Figure 23 MDIO Read Frame . . . 65
Figure 24 Layout of the MDIO Address Space . . . 67
Figure 25 External Circuitry for an Active-High MDINT . . . 68
Figure 26 External Circuitry for an Active-Low MDINT . . . 69
Figure 27 Single Color LED External Circuitry . . . 70
Figure 28 Bi-Color LED External Circuitry . . . 71
Figure 29 External Circuitry using the Integrated Switching Regulator . . . 74
Figure 30 External Circuitry without using the Integrated Switching Regulator . . . 75
Figure 31 EEE Low-Power Idle Sequence . . . 77
Figure 32 Block Diagram of a WoL Application . . . 79
Figure 33 The Magic Packet Format . . . 80
Figure 34 State Diagram for Power-Down Mode Management . . . 82
Figure 35 Test Packet Format . . . 85
Figure 36 MAC Interface Near-End Test Loop . . . 86
Figure 37 MDI connector Near-End Test Loop . . . 87
Figure 38 Echo Near-End Test Loop . . . 87
Figure 39 PCS Far-End Test Loop . . . 88
Figure 40 Timing Diagram for the GPY112 Reset Sequence . . . 169
Figure 41 Timing Diagram for the MDIO Interface . . . 171
Figure 42 Transmit Timing Diagram of the MII . . . 172
Figure 43 Receive Timing Diagram of the MII . . . 173
Figure 44 Transmit/Receive Timing Diagram of the RMII . . . 175
Figure 45 Transmit Timing Diagram of the GMII . . . 177
Figure 46 Receive Timing Diagram of the GMII . . . 178
Figure 47 Transmit Timing Diagram of the RGMII . . . 179
Figure 48 Receive Timing Diagram of the RGMII . . . 180
Figure 49 Transmit Timing Diagram of the SGMII . . . 182

The product (or products) mentioned in this data sheet are no longer being manufactured and may not be ordered (OBS)

Figure 50 Receive Timing Diagram of the SGMII 183
Figure 51 Transmit Timing Diagram of the 1000BASE-X Interface 184
Figure 52 Receive Timing Diagram of the 1000BASE-X 185
Figure 53 Equivalent Circuit for Crystal Specification 187
Figure 54 Tolerance Graph for the Forward Current Versus Voltage of the Supported LEDs 188
Figure 55 Schematic of a Typical Gigabit Ethernet Transformer Device 189
Figure 56 Twisted-Pair Common-Mode Rejection and Termination Circuitry 191
Figure 57 External Circuitry for SGMII 192
Figure 58 Simplified External Circuitry for SGMII 193
Figure 59 External Circuitry for a 1000BASE-X Interface 194
Figure 60 JTAG Timing Definition 195
Figure 61 Package Outline Drawing of the PG-LQFP-64 Package 196
Figure 62 Chip Marking of PG-LQFP-64 197

The product (or products) mentioned in this data sheet are no longer being manufactured and may not be ordered (OBS)

List of Tables

Table 1 Abbreviations for Pin Types . . . 19
Table 2 Abbreviations for Buffer Types . . . 19
Table 3 General Pins . . . 20
Table 4 Twisted-Pair Interface Pins . . . 21
Table 5 Media-Independent Interface Pins . . . 22
Table 6 Control Interface Pins . . . 34
Table 7 JTAG Interface Pins . . . 35
Table 8 Power Supply Pins . . . 36
Table 9 MII and MDI Combinations Supported by GPY112 . . . 37
Table 10 xMII Signal Multiplexing (Physical Pin Names in Bold) . . . 39
Table 11 Operation of Various Interfaces for Different FLOW and MODE Settings . . . 40
Table 12 Transmit Control Encoding . . . 43
Table 13 Receive Control Encoding . . . 43
Table 14 Supported Twisted-Pair Mappings . . . 47
Table 15 Soft Pin-Strapping: Mapping of Pull-Down Capacitance/Resistor Values to Configuration Bits . . . 51
Table 16 Mapping of Configuration Pins/Bits to Device Parameters (No EEPROM Connected) . . . 51
Table 17 Functions of Device Parameters Controlled by Soft Pin-Strapping (No EEPROM Connected) . . . 52
Table 18 Mapping of Configuration Pins/Bits to Device Parameters (EEPROM is Connected) . . . 54
Table 19 Functions of Device Parameters controlled by Soft Pin-Strapping (EEPROM is Connected) . . . 54
Table 20 Supported EEPROM Devices . . . 56
Table 21 Configuration Signature Record (CSR) . . . 57
Table 22 Configuration Content Record . . . 58
Table 23 Address Bit Mapping in 11-Bit Addressing Mode . . . 59
Table 24 Address Bit Mapping in 16-Bit Addressing Mode . . . 61
Table 25 Definition of MDIO Frame Components . . . 66
Table 26 MDIO Indirect MMD Device Address Overview . . . 68
Table 27 Direct LED Functions . . . 72
Table 28 Complex LED Functions . . . 72
Table 29 Switching Regulator External Component Values . . . 75
Table 30 Programming Sequence for the Wake-On-LAN Functionality . . . 80
Table 31 JTAG TAP Controller Op-Codes . . . 84
Table 32 JTAG Boundary Scan ID . . . 84
Table 33 Registers Address Space . . . 89
Table 34 Registers Overview . . . 89
Table 35 Register Access Types . . . 91
Table 36 Registers Address Space . . . 142
Table 37 Registers Overview . . . 142
Table 38 Register Access Types . . . 143
Table 39 Similar Registers . . . 157
Table 40 Similar Registers . . . 159
Table 41 Similar Registers . . . 162
Table 42 Similar Registers . . . 163
Table 43 Absolute Limit Ratings . . . 164
Table 44 Operating Range . . . 165
Table 45 DC Characteristics of the GPIO Interfaces (VDDP = 2.5 V) . . . 166
Table 46 DC Characteristics of the GPIO Interfaces (VDDP = 3.3 V) . . . 166
Table 47 DC Characteristics of the Receive MII Interface . . . 167
Table 48 DC Characteristics of the Transmit MII Interface . . . 167
Table 49 DC Characteristics of the Transmit LED Interface . . . 167

The product(s) mentioned in this data sheet are no longer being manufactured and may not be ordered (OBS)

Table 50 DC Characteristics of the JTAG Interface (VDDH = 2.5 V) . . . 168
Table 51 DC Characteristics of the JTAG Interface (VDDH = 3.3 V) . . . 168
Table 52 AC Characteristics of the RSTN Pin . . . 170
Table 53 AC Characteristics of the Power Supply . . . 170
Table 54 AC Characteristics of Input Clock on XTAL1 Pin . . . 171
Table 55 AC Characteristics of Output Clock on CLKOUT Pin . . . 171
Table 56 AC Characteristics of the MDIO Interface . . . 172
Table 57 Transmit Timing Characteristics of the MII at 10 Mbit/s . . . 172
Table 58 Transmit Timing Characteristics of the MII at 100 Mbit/s . . . 173
Table 59 Receive Timing Characteristics of the MII at 10 Mbit/s . . . 174
Table 60 Receive Timing Characteristics of the MII at 100 Mbit/s . . . 174
Table 61 Timing Characteristics of the RMII at 10/100 Mbit/s . . . 176
Table 62 Transmit Timing Characteristics of the GMII . . . 177
Table 63 Receive Timing Characteristics of the GMII . . . 178
Table 64 Transmit Timing Characteristics of the RGMII . . . 179
Table 65 Receive Timing Characteristics of the RGMII . . . 180
Table 66 Transmit Timing Characteristics of the SGMII . . . 182
Table 67 Receive Timing Characteristics of the SGMII . . . 183
Table 68 Transmit Timing Characteristics of the 1000BASE-X Interface . . . 184
Table 69 Receive Timing Characteristics of the 1000BASE-X . . . 185
Table 70 Power Consumption with VDDH and VDDP Set to 2.5 V, VDDC and VDDL Set to 1.0 V . . . 186
Table 71 Electrical Characteristics for Supported Crystals . . . 187
Table 72 Electrical Characteristics for Supported LEDs . . . 188
Table 73 Electrical Characteristics for Supported Transformers (Magnetics) . . . 189
Table 74 Electrical Characteristics for Supported RJ45 Plugs . . . 190
Table 75 Electrical Characteristics for supported Transformers (Magnetics) . . . 191
Table 76 Electrical Characteristics for the SGMII External Components . . . 192
Table 77 Electrical Characteristics for the 1000BASE-X External Components . . . 194
Table 78 JTAG Interface Timing . . . 195
Table 79 Chip Marking Pattern . . . 197
Table 80 Product and Package Naming . . . 197
Table 81 Thermal Resistance of the PG-LQFP-64 Package . . . 198

The product (or Product) mentioned in this data sheet are no longer being manufactured and may not be ordered (OBS)

1 Introduction

This document specifies the functionality of Intel® Ethernet Network Connection GPY112 Gigabit Ethernet (GbE) transceiver integrated circuit. It describes all aspects required for the development of systems based on Ethernet PHY technology.

1.1 About Intel® Ethernet Network Connection GPY112

The GPY112 is an ultra-low power, multi-mode Gigabit Ethernet (GbE) PHY IC, supporting speeds of 10, 100 and 1000 Mbit/s in full-duplex or half-duplex mode. It can be used in various data flows based on twisted-pair and fiber-optic communication links. The main application is the copper mode, where Media-Independent Interface (MII) data is converted to a Media-Dependent Interface (MDI) based on the 10BASE-T(e), 100BASE-TX and 1000BASE-T Ethernet standards according to **[1]**.

The GPY112 supports a number of features for convenience and reliability, including auto-negotiation (**Chapter 3.3.2**), auto-MDIX, auto-downspeed (**Chapter 3.3.3**) and cable wiring fault correction. In addition, the integrated cable diagnostics mode, the test packet generator, and the various test loops can be used for analysis and debugging of the target system. The GPY112 includes an integrated serializer/deserializer (SerDes) that can be used to operate a fiber link in conjunction with a 1000BASE-X fiber module. This capability enables data flow applications like media converters and dual-media flows with media auto-detection, as well as simple MII-to-fiber modes.

The MII pins of the GPY112 can be re-assigned to form one of several standard MII interfaces such as MII, RMII, GMII, RGMII and SGMII. In RGMII mode, the integrated delay function for the TX and RX clock simplifies PCB design. In SGMII mode, the PHY does not require a receive clock and instead uses the integrated Clock and Data Recovery (CDR).

Configuration management of the GPY112 can be done using its MDIO interface. Alternatively, the device can be pre-configured by means of an external I^2C-based EEPROM. Basic settings can be made using the novel soft pin-strapping feature available for the LED pins (see **Chapter 3.4.1**). The device also integrates a standard Test Access Port (TAP) for boundary scan.

The GPY112 is encased in the industry's smallest package (PG-LQFP-64) for a GbE PHY device with a given feature set and considering the level of integration. It therefore provides an ideal solution for footprint-sensitive applications such as SFP copper modules or LAN-on-Motherboard. Furthermore, the GPY112 design supports a reduced external bill of materials, for example through the integration of termination resistances at both the MDI and MII. The CLKOUT pin can optionally be used to provide a 25 MHz reference clock, allowing for multiple PHY devices to be cascaded while using only one crystal.

With an effectiveness of more than 80%, the GPY112 is tailored for energy efficiency. It can be operated from a single power supply ranging from 2.5 V to 3.3 V, in which case the 1.0 V domains are self-supplied using the device's integrated DC/DC switching regulator. By supporting the Energy-Efficient Ethernet (EEE) standard as defined in the IEEE 802.3az standard (**[2]**), the PHY is able to reduce active power consumption during periods of low link utilization, to a small fraction of the nominal consumption. Through implementation of a voltage mode line-driver, the active nominal power of the device is significantly reduced when compared to other devices of the same kind. Additionally, this line-driver technology does not require any center tap supply at the magnetics. This further simplifies the magnetics as there is now no need to use common-mode chokes.

The GPY112 supports further power savings at system level by means of the integrated Wake-on-LAN (WoL) feature. This mode can be activated at all Ethernet speeds. A WoL event is indicated to the SoC via an interrupt pin. It is possible to configure the polarity and functionality of this interrupt. Various events may be indicated via this interrupt, so as to reduce the need for MDIO polling by the SoC.

The GPY112 provides a set of 4 freely-configurable LED pins. Although LEDs can also be directly driven by the SoC (for example a network processor) via MDIO registers, the built-in functionality covers application needs such as bi-color LED support, configurable blinking frequencies, and configurable multiple-function assignment per LED.

The product (or products) mentioned in this data sheet are no longer being manufactured and may not be ordered (OBS)

1.2 Overview

This section gives an overview of the features and capabilities of the GPY112 (PEF7072HLV16).

1.2.1 Logic Symbol

Figure 1 shows the logic symbol of the Intel® Ethernet Network Connection GPY112.

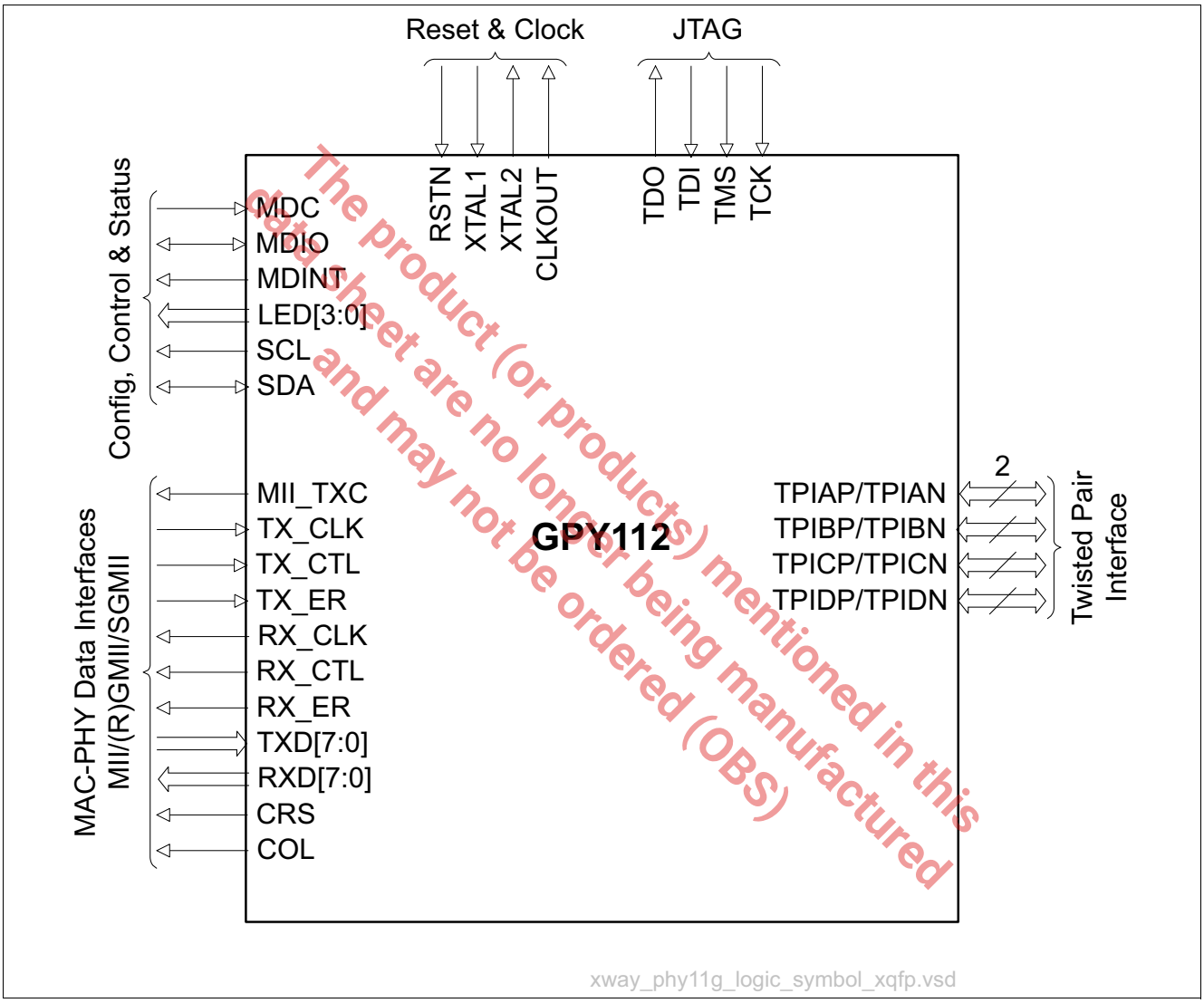

The product (or products) mentioned in this data sheet are no longer being manufactured and may not be ordered (OBS)

Figure 1 Logic Symbol of the GPY112

1.2.2 Features

This section outlines the features of the GPY112 (PEF7072HLV16).

General:

- Flexible power supply: V_{DDH} = 2.5 V... 3.3 V
- Single power supply optionally using the integrated DC/DC converter
- Low power consumption of 400 mW in Gigabit Ethernet mode
- Configurable startup mode using sophisticated pin-strappings
- Flexible architecture using an integrated device controller

Interfaces:

- Twisted-pair interface:
  - 10BASE-T(e), 100BASE-TX, 1000BASE-T[1)]
- Data interfaces (xMII1):
  - MII
  - RMII
  - GMII
  - RGMII
  - SGMII SerDes at 1.25 Gbaud
  - 1000BASE-X SerDes at 1.25 Gbaud
  - Jumbo packets of up to 10 kB
- Control interfaces:
  - MDIO
  - JTAG interface for boundary scan
  - Support of stand-alone operational mode using EEPROM interface (I^2C)
- Clocking:
  - Support of 25 MHz and 125 MHz input clock
  - Support of 25 MHz crystal using integrated oscillator
  - 25 MHz clock output

Ethernet:

- Auto-negotiation with next-page support
- Wake-on-LAN support
- Auto-downspeed
- Support of auto-MDIX at all copper media speeds
- Support of auto polarity-correction at all copper media speeds
- Various test features:
  - Test loops
  - Dummy frame generation and frame error counters
  - Analog self-test
- Cable diagnostics:
  - Cable open/short detection
  - Cable length estimation

External circuitry optimization:

- Integrated termination resistors at twisted-pair interface
- Integrated termination resistors at RGMII

The product (or products) mentioned in this data sheet are no longer being manufactured and may not be ordered (OBS)

1) 10BASE-T operation is only standard-conform at V_{DDH} = 3.3 V. This limitation does not apply to 10BASE-Te Ethernet.

- Support of low-cost transformers (magnetics)
- Support of low-cost crystal

1.2.3 Typical Applications

This section introduces typical applications of the GPY112, sorted according to the medium type used in the application.

1.2.3.1 Copper Application

In applications using the copper medium, the GPY112 is used to connect a 10/100/1000BASE-T capable MAC unit to a twisted-pair medium, such as a CAT5 cable infrastructure. The connection between MAC and PHY can be established using one of the supported xMII interface types: RGMII, MII, GMII or SGMII.

The Product (or products) mentioned in this data sheet are no longer being manufactured and may not be ordered (OBS)

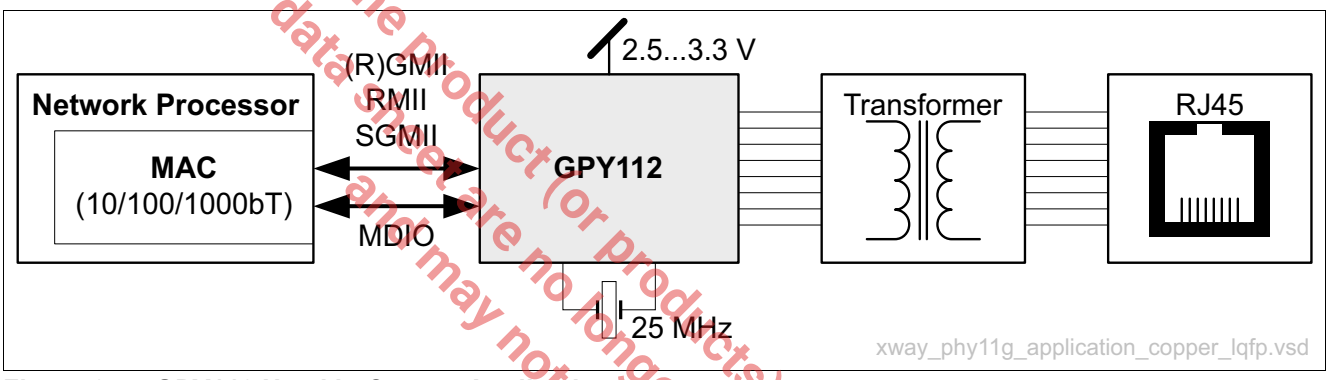

Figure 2 GPY112 Used in Copper Applications

1.2.3.2 Fiber Application

In applications using fiber, the GPY112 connects a 1000BASE-X capable MAC unit to a fiber or SFP module via a 1000BASE-X. The connection between MAC and PHY can be established using RGMII.

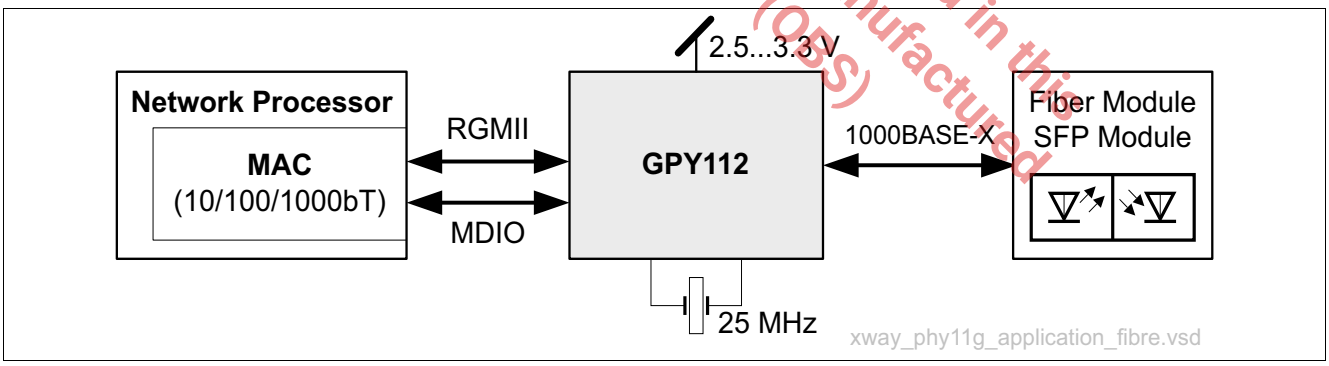

Figure 3 GPY112 Used in Fiber Applications

1.2.3.3 Media Converter Application

In media converter applications, the PHY is used to interface between fiber and copper media. The fiber medium can be connected using a fiber or SFP module, which is connected via a 1000BASE-X interface. The copper medium is connected via a twisted-pair interface (RJ45), using a transformer for galvanic de-coupling. Only one instance of the GPY112 device is required to address this application. Stand-alone operation is possible using the EEPROM (see **Chapter 3.4.2**) self-configuration capability.

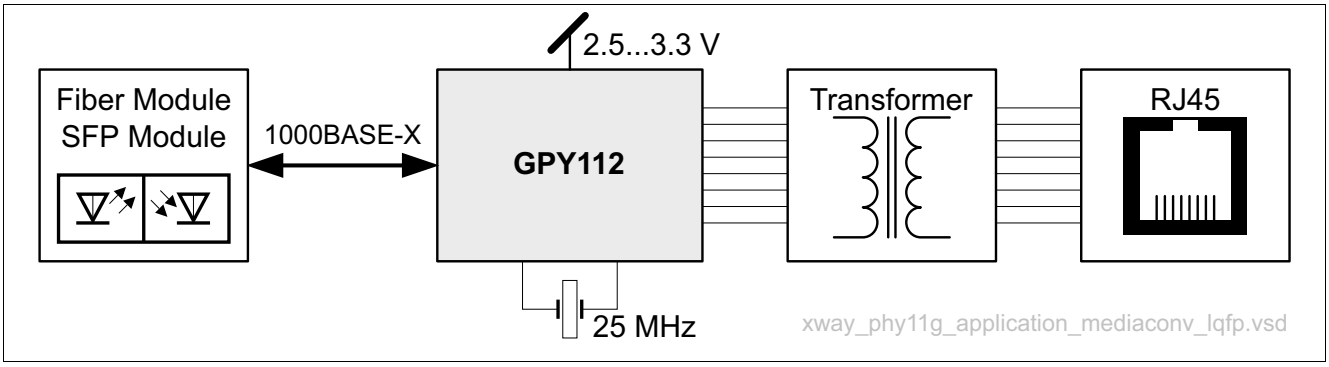

Figure 4 GPY112 Used in Media Converter Applications

1.2.3.4 Dual-Media Application

Dual-media applications are used to connect a MAC unit to either a twisted-pair or fiber link. The GPY112 device automatically detects which media is active, unless forced otherwise. Auto-negotiation is supported for both media types.

The product (or products) mentioned in this datasheet are no longer being manufactured and may not be ordered (OBS)

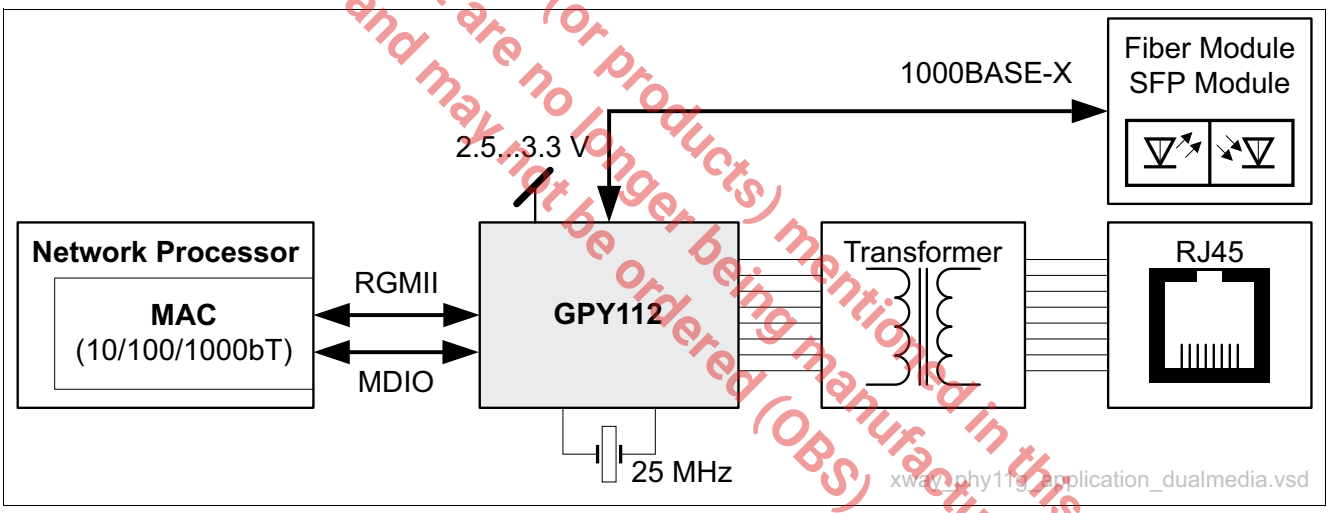

Figure 5 GPY112 Used in Dual-Media Application with a Fiber Module

1.2.3.5 Gigabit Interface Converter (GBIC) Application

The GBIC **[12]** application is used to support a 10/100/1000BASE-T GBIC module implementation, as illustrated in **Figure 4**. The MDIO interface of the GPY112 device is now not available, but an EEPROM can optionally be used to upload customer-specific configuration settings (see **Chapter 3.4.2**).

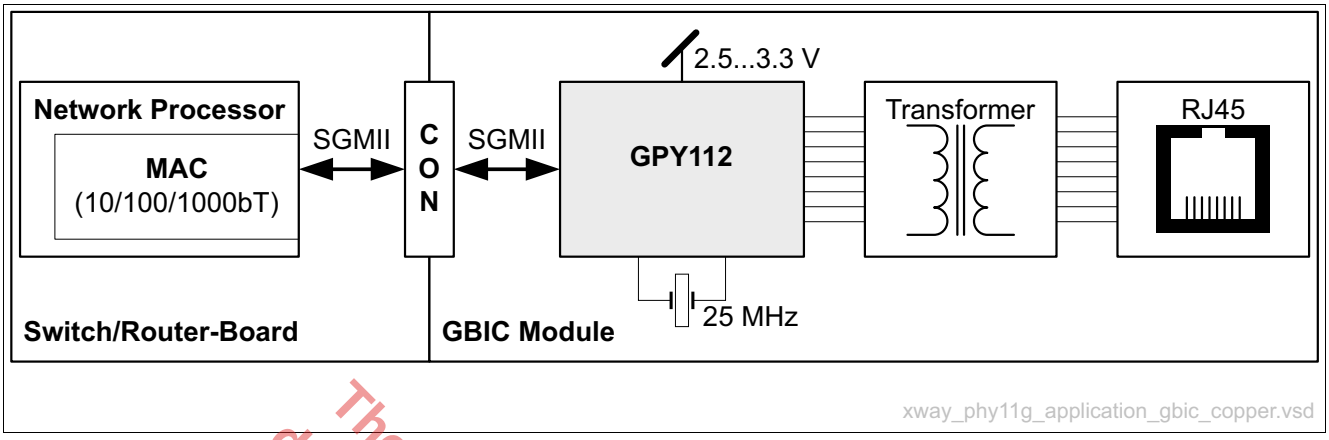

Figure 6 GPY112 Used in 10/100/1000BASE-T GBIC Application

The product(s) mentioned in this data sheet are no longer being manufactured and may not be ordered (OBS)

1.2.4 Terminology and Nomenclature

Throughout this document, the terms transmit (TX) and receive (RX) are used to specify the data and signal flow directions. Unless stated otherwise, the TX direction refers to the flow of data and signals from the MII to the MDI, that is from the MAC interface to the transmission medium. The transmission of data actually refers to the transport of data towards the next lower layer in the OSI reference model. The RX direction refers to the flow of data and signals in the opposite directions.

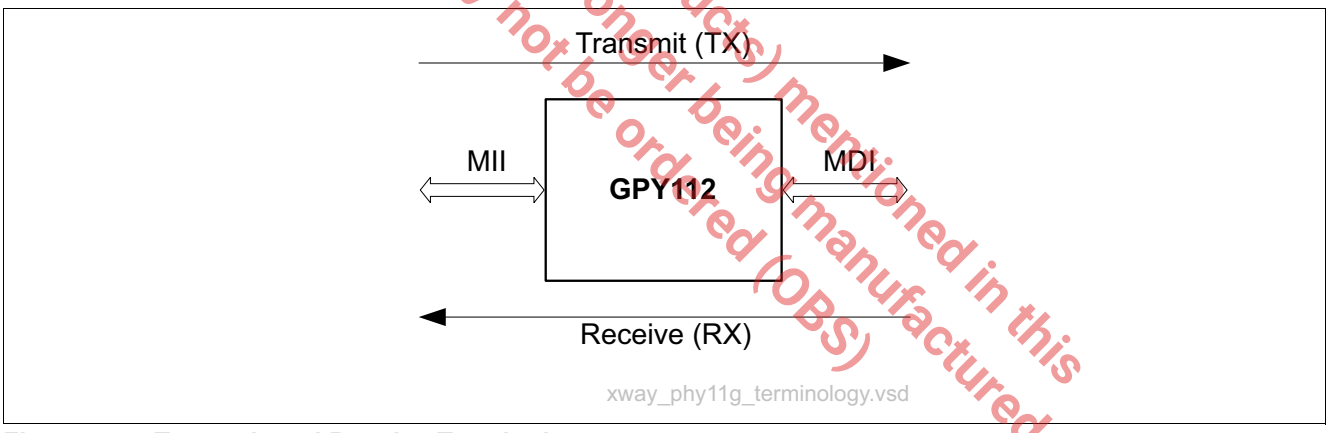

Figure 7 Transmit and Receive Terminology

Abbreviations are used throughout this document. Each abbreviation is explained once at its first appearance in the text, and is also included in a consolidated list of acronyms in **Terminology**.

When referring to registers, the document uses the following nomenclature:

`[Address-Space].[Sub-Space].[Register].[Register-Element]`

As an example,

`MDIO.STD.CTRL.PD`

refers to the PD bit inside the CTRL register, which is located inside the STD register's space of the MDIO address space (see also **Chapter 4**).

Alternatively, the text uses register references according to IEEE 802.3 **[1]**. These references are only applicable to the `MDIO.*` address space. Such references use the format:

`(Register-Number.Register-Bit-Number)`

As an example, the reference `(0.11)` refers to the same `MDIO.STD.CTRL.PD` bit.

2 External Signals

This chapter describes the external signals of the Intel® Ethernet Network Connection GPY112.

2.1 Pin Diagram

Figure 8 shows the pin diagram of the GPY112 when taking a top view of the PG-LQFP-64 package. The pins and the common ground pad (EPAD) are visible on the bottom side of the package. The latter is illustrated using dashed lines. The subsequent sections describe each of these pins in more detail.

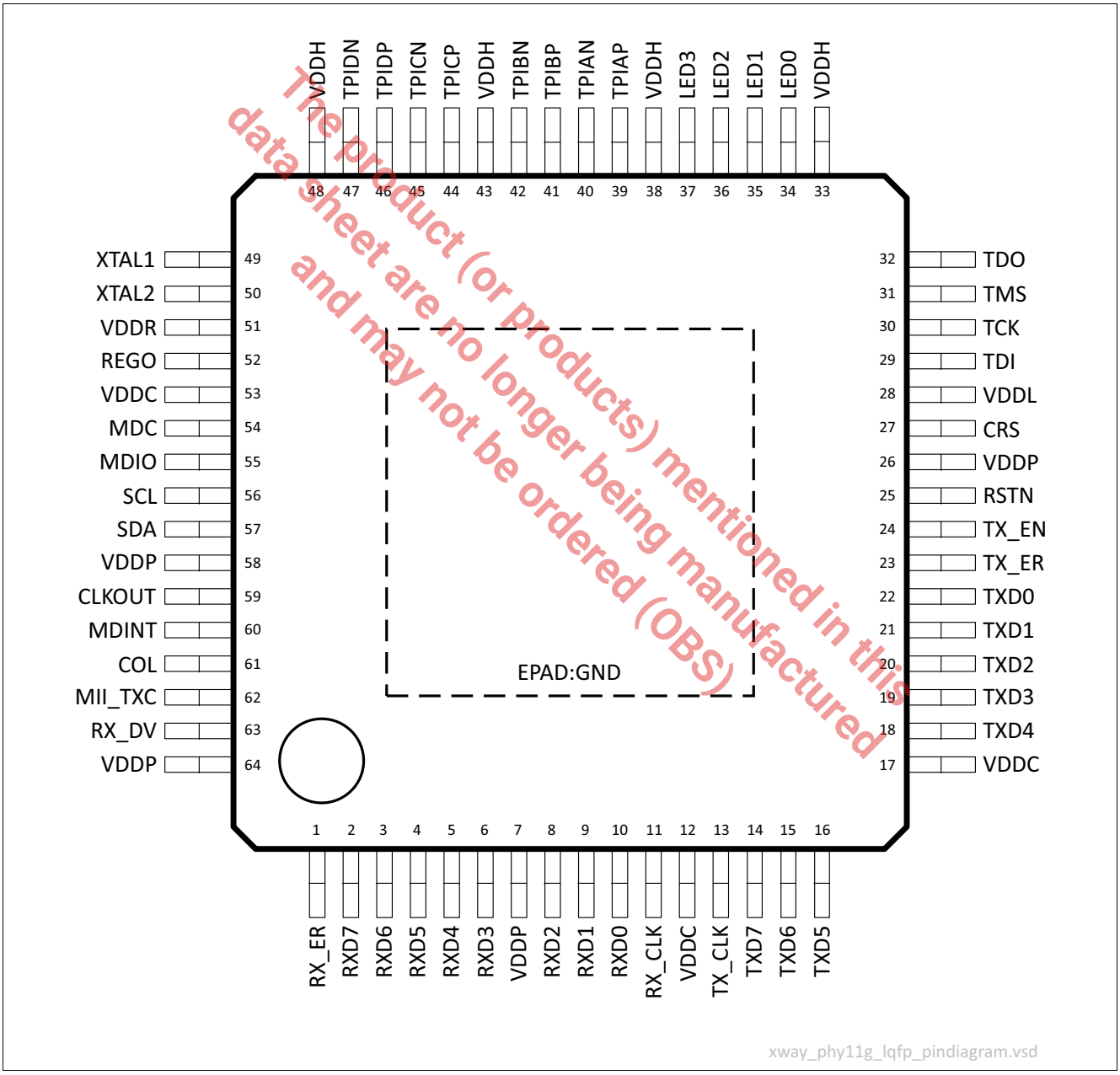

The product (or products) mentioned in this data sheet are no longer being manufactured and may not be ordered (OBS)

Figure 8 Pin Diagram of the GPY112 (Top View of PG-LQFP-64 Package)

2.2 Pin Description

In this section, all the GPY112 pins are grouped according to their functionality and described in detail in Chapter 2.2.2 through to Chapter 2.2.7 respectively. Chapter 2.2.1 explains the terminology used for the pin and buffer types.

2.2.1 Pin Identifications

The abbreviations used in the following sub-sections for the pin types and buffer types are explained in Table 1 and Table 2 respectively.

Table 1 Abbreviations for Pin Types

Type	Long Name	Remarks
I	Input pin	–
O	Output pin	–
I/O	Bi-directional pin	–
PWR	Power supply pin	–
GND	Ground pin	–

Table 2 Abbreviations for Buffer Types

Type	Long Name	Remarks
A	Analog levels	This buffer type is used for purely analog levels. The exact electrical characteristics are specified in the corresponding sections of Chapter 6.
HD	High-speed differential	This buffer type is used for SerDes pins, for example for SGMII or 1000BASE-X. These pins are properly terminated with a resistance of 50/75 Ω and must be AC-coupled. More details on the mandatory and optional external circuitry are given in Chapter 6.9.6.
PU	Internal pull-up resistor	This buffer type includes a weak internal pull-up resistor which pulls the signal to V_{DDP} (logic 1_B) when left unconnected or tristated (high-impedance).
PD	Internal pull-down resistor	This buffer type includes a weak internal pull-down resistor which pulls the signal to V_{SSP} (logic 0_B) when left unconnected or tristated (high-impedance).
LVTTL	Digital LVTTL levels	LVTTL buffer types according to JESD8-B. Note that this buffer is only supported when the pad supply V_{DDP} is nominally 3.3 V.
CMOS	Digital CMOS 2v5 levels	CMOS 2v5 buffer types according to JESD8-5. Note that this buffer is only supported when the pad supply V_{DDP} is nominally 2.5 V.

Note: Several pins are marked as having LVTTL/CMOS buffer type. This nomenclature defines that when V_{DDP} = 3.3 V, the pin operates in LVTTL buffer type mode, and when V_{DDP} = 2.5 V, the pin operates in CMOS2v5 buffer type mode.

Note: In CMOS mode, the input pins must not be driven with LVTTL levels!

The product (or products) mentioned in this data sheet are no longer being manufactured and may not be ordered (OBS).

2.2.2 General Pins

This section describes the group of general pins required for the correct operation of the GPY112, including the clock, reset and DC/DC converter interfaces.

Table 3 General Pins

Pin No.	Name	Pin Type	Buffer Type	Function
25	**RSTN**	I	LVTTL/ CMOS, PU	**Reset** Asynchronous low-active reset of the device to default.
49	**XTAL1**	I	A	**Crystal Mode: Crystal Oscillator Pin 1** A 25 MHz crystal must be connected between XTAL1 and XTAL2. Additional load capacitances must also be used to tie both pins to GND.
	REFCLK		LVTTL/ CMOS, PU	**Reference Mode: Clock Input** The clock input for the GPY112. This clock input can be either a 25 MHz or a 125 MHz clock. The reference clock must have a frequency accuracy of +/-50 ppm. The device automatically detects the frequency and adjusts its internal PLL accordingly.
50	**XTAL2**	O	A	**Crystal-Mode: Crystal Oscillator Pin 2** See XTAL1.
	XTAL2			**Reference-Mode: Not used** Must be left unconnected in this mode.
59	**CLKOUT**	O	LVTTL/ CMOS	**NORMAL: Clock Output** After de-assertion of the reset signal RSTN, this pin outputs a clock signal that can have a frequency of 25 MHz. The frequency is selected via the `CLKSEL` field in the **Physical Layer Control 2** MDIO register (default = 25 MHz).
52	**REGO**	O	A	**Integrated DC/DC Regulator Output** Provides a current output to self-supply the 1.0 V domains (V_{DDC}, V_{DDL}) of the GPY112 from the V_{DDR} supply.

The product(or products) mentioned in this data sheet are no longer going manufactured and may not be ordered (OBS)

2.2.3 Media-Dependent Interface (MDI) Pins

This section describes the twisted-pair Media-Dependent Interface (MDI), which directly connects to the transformer device. No external termination resistors are required.

Table 4 Twisted-Pair Interface Pins

Pin No.	Name	Pin Type	Buffer Type	Function
39	**TPIAP**	I/O	A	**Differential Tx/Rx Port for Twisted-Pair A** This is the twisted-pair port A that can be directly connected to the corresponding transformer pins. *Note: This port has a 100 Ω nominal impedance due to integrated termination resistors.*
40	**TPIAN**			
41	**TPIBP**	I/O	A	**Differential Tx/Rx Port for Twisted-Pair B** This is the twisted-pair port B that can be directly connected to the corresponding transformer pins. *Note: This port has a 100 Ω nominal impedance due to integrated termination resistors.*
42	**TPIBN**			
44	**TPICP**	I/O	A	**Differential Tx/Rx Port for Twisted-Pair C** This is the twisted-pair port C that can be directly connected to the corresponding transformer pins. *Note: This port has a 100 Ω nominal impedance due to integrated termination resistors.*
45	**TPICN**			
46	**TPIDP**	I/O	A	**Differential Tx/Rx Port for Twisted-Pair D** This is the twisted-pair port D that can be directly connected to the corresponding transformer pins. *Note: This port has 100 Ω nominal impedance due to integrated termination resistors.*
47	**TPIDN**			

The product(or products) mentioned in this data sheet are no longer being manufactured and may not be ordered (OBS)

2.2.4 Media-Independent Interface (MII) Pins

This section describes the Media-Independent Interface (MII), which connects the MAC to the GPY112. Multiplexed pins support several interface types, such as MII, RMII, GMII, RGMII and SGMII. Due to the pin limitations and the large number of supported interfaces, the multiplexing of pins between the different interfaces can be complex. This chapter gives a detailed view of each pin. **Table 5** gives an overview of MII pin multiplexing.

Table 5 Media-Independent Interface Pins

Pin No.	Name	Pin Type	Buffer Type	Function
62	–	O	LVTTL/ CMOS	**RGMII: Not Used** The GPY112 drives logic zero in this mode.
	MII_TXC			**MII: Transmit Clock** The TX_CLK signal is a continuous clock signal and provides the timing reference for the transfer of TX_EN, TX_ER and TXD[3:0]. The nominal frequency of this clock is 25 MHz for a 100 Mbit/s data rate, and 2.5 MHz for a 10 Mbit/s data rate.
	–			**GMII: Not Used** The GPY112 drives logic zero in this mode.
	–			**SGMII: Not Used** The GPY112 drives logic zero in this mode.
13	**TX_CLK**	I	LVTTL/ CMOS, PD	**RGMII: Transmit Clock** The TXC signal is a continuous clock signal and provides the timing reference for the transfer of TX_EN_CTL and TXD[3:0]. The nominal frequency of this clock is 125 MHz for 1000 Mbit/s, 25 MHz for 100 Mbit/s, and 2.5 MHz for 10 Mbit/s. Depending on the speed selection, this clock is assumed to be properly adjusted by the MAC. The frequency deviation is assumed to be smaller than +/- 50 ppm.
	REFCLK			**RMII: Reference Clock for the Transmit and Receive MAC I/F** The REFCLK signal is used by the MAC and the PHY MII for synchronous data transfers. The nominal frequency of this clock is 50 MHz. The GPY112 optionally provides a suitable free-running 50 MHz clock on RX_CLK.
	–			**MII: Not used** Should be connected to GND or driven with logic zero
	GTX_CLK			**GMII: Gigabit Transmit Clock** The GTX_CLK signal is a continuous clock and provides the timing reference for the transfer of TX_EN, TX_ER and TXD[7:0]. The nominal frequency of this clock is 125 MHz.
	SCP	O	HD	**SGMII: Serial Clock (Positive Pin)** This is the positive signal of the differential clock pair of the SGMII SerDes interface. In conjunction with SCN, it provides a 625 MHz differential clock that is source-synchronous with SOP/SON. If a MAC with CDR is used, this pin can be left open. The SCP pin must be AC-coupled. For more details, see **Chapter 6.9.6**.

The product (or Products) mentioned in this data sheet are no longer being manufactured and may not be ordered (OBS)

Table 5 Media-Independent Interface Pins (cont'd)

Pin No.	Name	Pin Type	Buffer Type	Function
11	**RX_CLK**	O	LVTTL/ CMOS	**RGMII: Receive Clock** The RXC signal is a continuous clock signal and provides the timing reference for the transfer of RX_EN_CTL and RXD[3:0]. The nominal frequency of this clock is 125 MHz for 1000 Mbit/s, 25 MHz for 100 Mbit/s and 2.5 MHz for 10 Mbit/s. The frequency deviation is smaller than +/-50 ppm.
	CLK50			**RMII: Optional 50 MHz Reference Clock for the RMII** This pin optionally provides a free-running reference clock for the RMII. This clock can be wired to the MAC and the TX_CLK of the GPY112 device. The nominal frequency of this clock is 50 MHz.
	RX_CLK			**MII: Receive Clock** The RX_CLK signal is a continuous clock signal and provides the timing reference for the transfer of RX_EN, RX_ER and RXD[3:0]. The nominal frequency of this clock is 25 MHz for a 100 Mbit/s data rate and 2.5 MHz for a 10 Mbit/s data rate.
	RX_CLK			**GMII: Gigabit Receive Clock** The RX_CLK signal carries a continuous clock signal driven by the PHY and provides a timing reference for the transfer of RX_DV, RX_ER and RXD[7:0] to the reconciliation sub-layer, that is the MAC unit. The nominal frequency of this clock is 125 MHz.
	–			**SGMII: Not Used** The GPY112 drives logic zero in this mode.
23	–	I	LVTTL/ CMOS, PD	**RGMII: Not used** Should be connected to GND or driven with logic zero.
	–			**RMII: Not used** Should be connected to GND or driven with logic zero.
	TX_ER			**MII: Transmit Error** This is the transmit error signal driven by the reconciliation sub-layer, that is by the MAC, which is synchronous with MII_TXC. This signal indicates error information to the PHY. The signal polarity is active high.
	TX_ER			**GMII: Transmit Error** This is the transmit error signal driven by the reconciliation sub-layer, that is by the MAC, which is synchronous with GTX_CLK. This signal indicates error information to the PHY. The signal polarity is active high.
	RDP2		HD	**1000BASE-X: Receive Data (Positive Pin)** This is the positive signal of the differential receive input pair of the 1000BASE-X SerDes interface. In conjunction with RDN2, it receives a 1.25 Gbit/s differential data signal driven by the fiber-optic module. This pin must be AC-coupled. For more details, see Chapter 6.9.7.

The product (or product) mentioned in this data sheet are no longer being manufactured and may not be ordered (OBS)

Table 5 Media-Independent Interface Pins (cont'd)

Pin No.	Name	Pin Type	Buffer Type	Function
24	–	I	LVTTL/ CMOS, PD	**RGMII: Not Used** Should be connected to GND or driven with logic zero
	–			**RMII: Not Used** Should be connected to GND or driven with logic zero
	TX_EN			**MII: Transmit Enable** This is the transmission-enable signal driven by the MAC, and is synchronous with MII_TXC. The signal indicates valid data frames on TXD[3:0] towards the PHY. The signal polarity is active high.
	TX_EN			**GMII: Transmit Enable** This is the transmission-enable signal driven by the reconciliation sub-layer, that is by the MAC, and is synchronous with GTX_CLK. This signal indicates valid data frames on TXD[7:0] towards the PHY. The signal polarity is active high.
	RDN2		HD	**1000BASE-X: Receive Data (Negative Pin)** This is the negative signal of the differential receive input pair of the 1000BASE-X SerDes interface. In conjunction with RDP2, it receives a 1.25 Gbit/s differential data signal driven by the fiber-optic module. This pin must be AC-coupled. For more details, see Chapter 6.9.7.
14	TXD3	I	LVTTL/ CMOS, PD	**RGMII: Transmit Data Bit 3** This pin carries bit 3 of the TXD[3:0] RGMII transmit data vector. It is synchronous with TXC.
	–			**RMII: Not Used** Should be connected to GND or driven with logic zero.
				MII: Not Used Should be connected to GND
	TXD7			**GMII: Transmit Data Bit 7** This pin carries bit 7 of the TXD[7:0] GMII transmit data vector. It is synchronous with GTX_CLK.
	SCN	O	HD	**SGMII: Serial Clock (Negative Pin)** This is the negative signal of the differential clock pair of the SGMII SerDes interface. In conjunction with SCP, it provides a 625 MHz differential clock that is source-synchronous with SOP/SON. If a MAC with CDR is used, this pin can be left open. The pin must be AC-coupled. For more details, see Chapter 6.9.6.

The product(or products) mentioned in this data sheet are no longer being manufactured and may not be ordered (OBS)

Table 5 Media-Independent Interface Pins (cont'd)

Pin No.	Name	Pin Type	Buffer Type	Function
15	TXD2	I	LVTTL/ CMOS, PD	**RGMII: Transmit Data Bit 2** This pin carries bit 2 of the TXD[3:0] RGMII transmit data vector. It is synchronous with TXC.
	–			**RMII: Not Used** Should be connected to GND or driven with logic zero.
				MII: Not Used Should be connected to GND
	TXD6			**GMII: Transmit Data Bit 6** This pin carries bit 6 of the TXD[7:0] GMII transmit data vector. It is synchronous with GTX_CLK.
	TDP1	O	HD	**1000BASE-X: Transmit Data (Positive Pin)** This is the positive signal of the differential transmit output pair of the 1000BASE-X SerDes interface. In conjunction with TDN1, it provides a 1.25 Gbit/s differential data signal to the fiber-optic module. This pin must be AC-coupled. For more details, see Chapter 6.9.7.
	SOP			**SGMII: Serial Output (positive pin)** This is the positive signal of the differential output (receive) pair of the SGMII SerDes interface. In conjunction with SON, it provides a 1.25 Gbit/s differential data signal that is source-synchronous with the differential 625 MHz clock SCP/SCN. This pin must be AC-coupled. For more details, see Chapter 6.9.6.
16	TXD1	I	LVTTL/ CMOS, PD	**RGMII: Transmit Data Bit 1** This pin carries bit 1 of the TXD[3:0] RGMII transmit data vector. It is synchronous with TXC.
	TXD1			**RMII: Transmit Data Bit 1** This pin carries bit 1 of the TXD[1:0] RMII transmit data vector. It is synchronous with REFCLK.
				MII: Not Used Should be connected to GND
	TXD5			**GMII: Transmit Data Bit 5** This pin carries bit 5 of the TXD[7:0] GMII transmit data vector. It is synchronous with GTX_CLK.
	TDN1	O	HD	**1000BASE-X: Transmit Data (Negative Pin)** This is the negative signal of the differential transmit output pair of the 1000BASE-X SerDes interface. In conjunction with TDP1, it provides a 1.25 Gbit/s differential data signal to the fiber-optic module. This pin must be AC-coupled. For more details, see Chapter 6.9.7.
	SON			**SGMII: Serial Output (Negative Pin)** This is the negative signal of the differential output (receive) pair of the SGMII SerDes interface. In conjunction with SOP, it provides a 1.25 Gbit/s differential data signal that is source-synchronous with the differential 625 MHz clock SCP/SCN. This pin must be AC-coupled. For more details, see Chapter 6.9.6.

The product(or products) mentioned in this data sheet are forecast, being manufactured and may not be ordered (Obs).

Table 5 Media-Independent Interface Pins (cont'd)

Pin No.	Name	Pin Type	Buffer Type	Function
18	TXD0	I	LVTTL/ CMOS, PD	**RGMII: Transmit Data Bit 0** This pin carries bit 0 of the TXD[3:0] RGMII transmit data vector. It is synchronous with TXC.
	TXD0			**RMII: Transmit Data Bit 0** This pin carries bit 0 of the TXD[1:0] RMII transmit data vector. It is synchronous with REFCLK.
	–			**MII: Not Used** Should be connected to GND
	TXD4			**GMII: Transmit Data Bit 4** This pin carries bit 4 of the TXD[7:0] GMII transmit data vector. It is synchronous with GTX_CLK.
	RDP1		HD	**1000BASE-X: Receive Data (Positive Pin)** This is the positive signal of the differential receive input pair of the 1000BASE-X SerDes interface. In conjunction with RDN1, it receives a 1.25 Gbit/s differential data signal driven by the fiber-optic module. This pin must be AC-coupled. For more details, see Chapter 6.9.7.
	SIP			**SGMII: Serial Input (Positive Pin)** This is the positive signal of the differential input (transmit) pair of the SGMII SerDes interface. In conjunction with SIN, it samples a 1.25 Gbit/s differential data signal. Due to the integrated CDR, no external MAC source-synchronous clock is required. This pin must be AC-coupled. For more details, see Chapter 6.9.6.

The product(or product) mentioned in this data sheet are no longer being manufactured and may not be ordered (OBS)

Table 5 Media-Independent Interface Pins (cont'd)

Pin No.	Name	Pin Type	Buffer Type	Function
19	TX_CTL	I	LVTTL/ CMOS, PD	**RGMII: Transmit Control** This pin is the transmit control signal for the TXD[3:0] RGMII transmit data vector. It is synchronous with TXC.
	TX_EN			**RMII: Transmit Enable** This is the transmission-enable signal driven by the MAC, and which is synchronous with REFCLK. The signal indicates valid data frames on TXD[1:0] to the PHY. The signal polarity is active high.
	TXD3			**MII: Transmit Data Bit 3** This pin carries bit 3 of the TXD[3:0] MII transmit data vector. It is synchronous with TX_CLK.
	TXD3			**GMII: Transmit Data Bit 3** This pin carries bit 3 of the TXD[7:0] GMII transmit data vector. It is synchronous with GTX_CLK.
	RDN1		HD	**1000BASE-X: Receive Data (Negative Pin)** This is the negative signal of the differential receive input pair of the 1000BASE-X SerDes interface. In conjunction with RDP1, it receives a 1.25 Gbit/s differential data signal driven by the fiber-optic module. This pin must be AC-coupled. For more details, see Chapter 6.9.7.
	SIN			**SGMII: Serial Input (Negative Pin)** This is the negative signal of the differential input (transmit) pair of the SGMII SerDes interface. In conjunction with SIP, it samples a 1.25 Gbit/s differential data signal. Due to the integrated CDR, no external MAC source-synchronous clock is required. This pin must be AC-coupled. For more details, see Chapter 6.9.6.
20	–	I	LVTTL/ CMOS, PD	**RGMII: Not Used** Should be connected to GND or driven with logic zero.
	–			**RMII: Not Used** Should be connected to GND or driven with logic zero.
	TXD2			**MII: Transmit Data Bit 2** This pin carries bit 2 of the TXD[3:0] MII transmit data vector. It is synchronous with MII_TXC.
	TXD2			**GMII: Transmit Data Bit 2** This pin carries bit 2 of the TXD[7:0] GMII transmit data vector. It is synchronous with GTX_CLK.
	TDP2	O	HD	**1000BASE-X: Transmit Data (Positive Pin)** This is the positive signal of the differential transmit output pair of the 1000BASE-X SerDes interface. In conjunction with TDN2, it provides a 1.25 Gbit/s differential data signal to the fiber-optic module. This pin must be AC-coupled. For more details, see Chapter 6.9.7.

The product(or products) mentioned in this data sheet are no longer being manufactured and may not be ordered (OBS)

Table 5 Media-Independent Interface Pins (cont'd)

Pin No.	Name	Pin Type	Buffer Type	Function
21	TXD1	I	LVTTL/ CMOS, PD	**RGMII: Not Used** Should be connected to GND or driven with logic zero.
	–			**RMII: Not Used** Should be connected to GND or driven with logic zero.
	TXD1			**MII: Transmit Data Bit 1** This pin carries bit 1 of the TXD[3:0] MII transmit data vector. It is synchronous with MII_TXC.
	TXD1			**GMII: Transmit Data Bit 1** This pin carries bit 1 of the TXD[7:0] GMII transmit data vector. It is synchronous with GTX_CLK.
	TDN2	O	HD	**1000BASE-X: Transmit Data (Negative Pin)** This is the negative signal of the differential transmit output pair of the 1000BASE-X SerDes interface. In conjunction with TDP2, it provides a 1.25 Gbit/s differential data signal to the fiber-optic module. This pin must be AC-coupled. For more details, see Chapter 6.9.7.
22	–	I	LVTTL/ CMOS, PD	**RGMII: Not Used** Should be connected to GND or driven with logic zero.
	–			**RMII: Not Used** Should be connected to GND or driven with logic zero.
	TXD0			**MII: Transmit Data Bit 0** This pin carries bit 0 of the TXD[3:0] MII transmit data vector. It is synchronous with MII_TXC.
	TXD0			**GMII: Transmit Data Bit 0** This pin carries bit 0 of the TXD[7:0] GMII transmit data vector. It is synchronous with GTX_CLK.
	SIGDET		LVTTL/ CMOS	**1000BASE-X: Signal Detect** The signal detect pin is used in dual-media applications to detect whether a valid signal is present from the FO module. The polarity of this pin can be programmed both via pin-strapping and via the SDETP field in the Physical Layer Control 2 register.

The product(or products) mentioned in this data sheet are no longer going manufactured and may not be ordered (OBS)

Table 5 Media-Independent Interface Pins (cont'd)

Pin No.	Name	Pin Type	Buffer Type	Function
1	–	O	LVTTL/ CMOS	**RGMII: Not Used** The GPY112 drives logic zero in this mode.
	RX_ER			**RMII: Receive Error** This is the receive error signal driven by the PHY, and which is synchronous with REFCLK. This signal indicates errors to the MAC. The signal polarity is active high.
	RX_ER			**MII: Receive Error** This is the receive error signal driven by the PHY, and which is synchronous with RX_CLK. This signal indicates errors to the MAC. The signal polarity is active high.
	RX_ER			**GMII: Receive Error** This is the receive error signal driven by the PHY, and which is synchronous with RX_CLK. This signal indicates errors to the MAC. The signal polarity is active high.
	–			**SGMII: Not Used** The GPY112 drives logic zero in this mode.
63	RX_CTL	O	LVTTL/ CMOS	**RGMII: Receive Control** This is the receive control signal driven by the PHY, and which is synchronous with RXC. The signal encodes the RX_DV and RX_ER signals of the GMII, according to the RGMII specification. The signal polarity is active high.
	CRS_DV			**RMII: Carrier Sense and Data Valid** This is the carrier sense/data valid signal driven by the PHY, and which is synchronous with REFCLK. The signal encodes the RX_DV and CRS signals of the RMII, according to the RMII specification. The signal polarity is active high.
	RX_DV			**MII: Receive Data Valid** This is the receive-data valid signal driven by the PHY, and which is synchronous with RX_CLK. The signal indicates valid data frames on RXD[3:0] to the reconciliation sub-layer. The signal polarity is active high.
	RX_DV			**GMII: Receive Data Valid** This is the receive-data valid signal driven by the PHY, and which is synchronous with RX_CLK. The signal indicates valid data frames on RXD[7:0] to the reconciliation sub-layer. The signal polarity is active high.
	–			**SGMII: Not Used** The GPY112 drives logic zero in this mode.

The product(or products) mentioned in this data sheet are no longer being manufactured and may not be ordered (OBS)

Table 5 Media-Independent Interface Pins (cont'd)

Pin No.	Name	Pin Type	Buffer Type	Function
2	–	O	LVTTL/ CMOS	**RGMII: Not Used** The GPY112 drives logic zero in this mode.
	–			**RMII: Not used** The GPY112 drives logic zero in this mode.
				MII: Not used The GPY112 drives logic zero in this mode.
	RXD7			**GMII: Receive Data Bit 7** This pin carries bit 7 of the RXD[7:0] GMII receive data vector. It is synchronous with RX_CLK.
	–			**SGMII: Not Used** The GPY112 drives logic zero in this mode.
3	–	O	LVTTL/ CMOS	**RGMII: Not Used** The GPY112 drives logic zero in this mode.
	–			**RMII: Not Used** The GPY112 drives logic zero in this mode.
	–			**MII: Not Used** The GPY112 drives logic zero in this mode.
	RXD6			**GMII: Receive Data Bit 6** This pin carries bit 6 of the RXD[7:0] GMII receive data vector. It is synchronous with RX_CLK.
	–			**SGMII: Not Used** The GPY112 drives logic zero in this mode.
4	–	O	LVTTL/ CMOS	**RGMII: Not Used** The GPY112 drives logic zero in this mode.
	–			**RMII: Not Used** The GPY112 drives logic zero in this mode.
	–			**MII: Not Used** The GPY112 drives logic zero in this mode.
	RXD5			**GMII: Receive Data Bit 5** This pin carries bit 5 of the RXD[7:0] GMII receive data vector. It is synchronous with RX_CLK.
	–			**SGMII: Not Used** The GPY112 drives logic zero in this mode.

The product(s) mentioned in this data sheet are no longer being manufactured and may not be ordered (OBS)

Table 5 Media-Independent Interface Pins (cont'd)

Pin No.	Name	Pin Type	Buffer Type	Function
5	–	O	LVTTL/ CMOS	**RGMII: Not Used** The GPY112 drives logic zero in this mode.
	–			**RMII: Not Used** The GPY112 drives logic zero in this mode.
	–			**MII: Not Used** The GPY112 drives logic zero in this mode.
	RXD4			**GMII: Receive Data Bit 4** This pin carries bit 4 of the RXD[7:0] GMII receive data vector. It is synchronous with GTX_CLK.
	–			**SGMII: Not Used** The GPY112 drives logic zero in this mode.
6	**RXD3**	O	LVTTL/ CMOS	**RGMII: Receive Data Bit 3** This pin carries bit 3 of the RXD[3:0] RGMII receive data vector. It is synchronous with RXC.
	–			**RMII: Not Used** The GPY112 drives logic zero in this mode.
	RXD3			**MII: Receive Data Bit 3** This pin carries bit 3 of the RXD[3:0] MII receive data vector. It is synchronous with RX_CLK.
	RXD3			**GMII: Receive Data Bit 3** This pin carries bit 3 of the RXD[7:0] GMII receive data vector. It is synchronous with RX_CLK.
	–			**SGMII: Not Used** The GPY112 drives logic zero in this mode.
8	**RXD2**	O	LVTTL/ CMOS	**RGMII: Receive Data Bit 2** This pin carries bit 2 of the RXD[3:0] RGMII receive data vector. It is synchronous with RXC.
	–			**RMII: Not Used** The GPY112 drives logic zero in this mode.
	RXD2			**MII: Receive Data Bit 2** This pin carries bit 2 of the RXD[3:0] MII receive data vector. It is synchronous with RX_CLK.
	RXD2			**GMII: Receive Data Bit 2** This pin carries bit 2 of the RXD[7:0] GMII receive data vector. It is synchronous with RX_CLK.
	–			**SGMII: Not Used** The GPY112 drives logic zero in this mode.

The product(s) mentioned in this data sheet are no longer being manufactured and may not be ordered (OBS)

Table 5 Media-Independent Interface Pins (cont'd)

Pin No.	Name	Pin Type	Buffer Type	Function
9	**RXD1**	O	LVTTL/ CMOS	**RGMII: Receive Data Bit 1** This pin carries bit 1 of the RXD[3:0] RGMII receive data vector. It is synchronous with RXC.
	RXD1			**RMII: Receive Data Bit 1** This pin carries bit 1 of the RXD[1:0] RMII receive data vector. It is synchronous with REFCLK.
	RXD1			**MII: Receive Data Bit 1** This pin carries bit 1 of the RXD[3:0] MII receive data vector. It is synchronous with RX_CLK.
	RXD1			**GMII: Receive Data Bit 1** This pin carries bit 1 of the RXD[7:0] GMII receive data vector. It is synchronous with RX_CLK.
	–			**SGMII: Not Used** The GPY112 drives logic zero in this mode.
10	**RXD0**	O	LVTTL/ CMOS	**RGMII: Receive Data Bit 0** This pin carries bit 0 of the RXD[3:0] RGMII receive data vector. It is synchronous with RXC.
	RXD0			**RMII: Receive Data Bit 0** This pin carries bit 0 of the RXD[1:0] RMII receive data vector. It is synchronous with REFCLK.
	RXD0			**MII: Receive Data Bit 0** This pin carries bit 0 of the RXD[3:0] MII receive data vector. It is synchronous with RX_CLK.
	RXD0			**GMII: Receive Data Bit 0** This pin carries bit 0 of the RXD[7:0] GMII receive data vector. It is synchronous with RX_CLK.
	–			**SGMII: Not Used** The GPY112 drives logic zero in this mode.

The product(or products) mentioned in this data sheet are no longer being manufactured and may not be ordered (OBS)

Table 5 Media-Independent Interface Pins (cont'd)

Pin No.	Name	Pin Type	Buffer Type	Function
61	–	O	LVTTL/ CMOS	**RGMII: Not Used** The GPY112 drives logic zero in this mode.
	–			**RMII: Not Used** The GPY112 drives logic zero in this mode.
	COL			**MII: Collision Detection** This signal indicates a collision detection in half-duplex mode to the MAC. Although the standard does not require this signal to be synchronous with either TX_CLK or RX_CLK, for the sake of simplicity the PHY drives this signal synchronously with the RX_CLK signal. The signal is active high. In full-duplex mode this signal is forced to logic zero.
	COL			**GMII: Collision Detection** This signal indicates a collision detection in half-duplex mode to the MAC. Although the standard does not require this signal to be synchronous with either GTX_CLK or RX_CLK, for the sake of simplicity the PHY drives this signal synchronously with the RX_CLK signal. The signal is active high. In full-duplex mode this signal is forced to logic zero.
	–			**SGMII: Not Used** The GPY112 drives logic zero in this mode.
27	–	O	LVTTL/ CMOS	**RGMII: Not Used** The GPY112 drives logic zero in this mode.
	–			**RMII: Not Used** The GPY112 drives logic zero in this mode.
	CRS			**MII: Carrier Sense** This signal indicates a non-idle media in half-duplex mode to the MAC. Although the standard does not require this signal to be synchronous with either TX_CLK or RX_CLK, for the sake of simplicity the PHY drives this signal synchronously with the RX_CLK signal. This signal is active high. In case of full-duplex mode this signal is forced to logic zero.
	CRS			**GMII: Carrier Sense** This signal indicates a non-idle medium in half-duplex mode to the MAC. Although the standard does not require this signal to be synchronous with either GTX_CLK or RX_CLK, for the sake of simplicity the PHY drives this signal synchronously with the RX_CLK signal. This signal is active high. In full-duplex mode this signal is forced to logic zero.
	–			**SGMII: Not Used** The GPY112 drives logic zero in this mode.

The product(s) mentioned in this data sheet are no longer being manufactured and may not be ordered (OBS).

2.2.5 Control Interface Pins

This section specifies the MDIO Interface according to clause 22 in [1]. The AC characteristics of this interface are defined in Chapter 6.6.5.

Table 6 Control Interface Pins

Pin No.	Name	Pin Type	Buffer Type	Function
54	**MDC**	I	LVTTL/ CMOS, PD	**MDIO: Management Data Clock** This is the MDIO data clock signal with which the serial management interface signals on MDIO are synchronized. All MDIO signals are subject to change at the rising edge of MDC.
55	**MDIO**	I/O	LVTTL/ CMOS, PU	**MDIO: Management Data Input/Output** The management data input/output pin carries control information written by the higher-level management entity to the PHY. This includes command, address and write information. The MDIO is registered on the rising edge of MDC. The pin is pulled up in input mode only.
60	**MDINT**	O	LVTTL/ CMOS	**MDIO: Management Interrupt** This pin can be used to drive an interrupt signal to the higher-level management entity. The event for which this interrupt should be issued is configurable via the MDIO registers. If no interrupt is active, then the pin is in a high-impedance state. The polarity of the pin can be set via an external pull-up (low-active MDINT) or pull-down (high-active MDINT) resistor. A value of 10 kΩ is recommended. In case multiple GPY112 devices are controlled by one higher-level management entity, these signals can be combined using a wired-or. After the GPY112 is reset, the signal becomes active to indicate that it is ready to accept MDIO inputs. The register MDIO.PHY.ISTAT needs to be read to deactivate this signal.
LED Interface				
34	**LED0**	I/O	A	**LED0** This is a freely configurable LED port that can be used to connect a preferably low-current LED. *Note: This pin reads in soft pin-strapping information during reset.*
35	**LED1**	I/O	A	**LED1** This is a freely configurable LED port that can be used to connect a preferably low-current LED. *Note: This pin reads in soft pin-strapping information during reset.*
36	**LED2**	I/O	A	**LED2** This is a freely configurable LED port that can be used to connect a preferably low-current LED. *Note: This pin reads in soft pin-strapping information during reset.*
37	**LED3**	I/O	A	**LED3** This is a freely configurable LED port that can be used to connect a preferably low-current LED. *Note: This pin reads in soft pin-strapping information during reset.*

The product(s) mentioned in this data sheet are no longer being manufactured and may not be ordered (OBS)

Table 6 Control Interface Pins (cont'd)

Pin No.	Name	Pin Type	Buffer Type	Function
EEPROM/I²C/Two-Wire Interface				
56	**SCL**	O	LVTTL/ CMOS, PU	**Serial Clock** This is the serial clock of the I²C interface. The maximum frequency of this interface is 1 MHz. The frequency is configurable via the soft pin-strapping pins. This clock is only active when an EEPROM is connected and during an access to the EEPROM. The duty cycle is 50%.
57	**SDA**	I/O	LVTTL/ CMOS, PU	**Serial Data/Address** This is the serial data/address of the I²C interface that shall (optionally) be connected to an external EEPROM supporting an I²C (or Two-Wire) interface. An operational mode using an external EEPROM is useful in systems without a higher-level management entity. The GPY112 automatically detects a connected EEPROM by monitoring the SDA pin after reset or power-up. This pin must be connected to GND to indicate that no EEPROM is present. If an EEPROM is present, the soft pin-strapping pins are used to define the speed and operational mode of the EEPROM interface.

The product(s) mentioned in this data sheet are no longer being manufactured and may not be ordered (OBS)

2.2.6 JTAG Interface

This section describes the JTAG test pins used for boundary scan testing[1)].

Table 7 JTAG Interface Pins

Pin No.	Name	Pin Type	Buffer Type	Function
32	**TDO**	O	LVTTL/ CMOS	**JTAG Serial Test Data Output**
29	**TDI**	I	LVTTL/ CMOS, PU	**JTAG Serial Test Data Input**
31	**TMS**	I		**JTAG Test Mode Select**
30	**TCK**	I		**JTAG Test Clock** The TDI, TDO and TMS signals are synchronized with this JTAG test clock. *Note: If the JTAG interface is not used, this pin must be tied to V_{DDP} using a pull-up resistor!*

1) JTAG reset is achieved by an internal power-on-reset module and therefore a TRST input is unnecessary. Reset of the JTAG can also be achieved using the Tap Controller Initialization Sequence as described in [8].

2.2.7 Power Supply Pins

This section specifies the power supply pins of the GPY112. The operating ranges of the power domains are specified in **Chapter 6.2**.

Table 8 Power Supply Pins

Pin No.	Name	Pin Type	Buffer Type	Function
33,38,43,48	**VDDH**	PWR		**High-Voltage Domain Supply** This is the group of supply pins for the high-voltage domain, which supplies the line driver in the PMA of the GPY112. This supply has to provide a nominal voltage of V_{DDH} = 2.5 V or 3.3 V, with a worst case tolerance of ±5% at the respective corners. *Note: For optimal power consumption, the lowest possible voltage is selected in the system.*
51	**VDDR**	PWR		**Regulator Voltage Domain Supply** This is the group of supply pins for the DC/DC switching regulator voltage domain, which supplies the integrated DC/DC converter of the GPY112. This supply has to provide a nominal voltage of V_{DDR} = 2.5 V or 3.3 V, with a worst case tolerance of ±5% at the respective corners. *Note: For optimal power consumption, the lowest possible voltage is selected in the system.*
7,26,58,64	**VDDP**	PWR		**Pad Voltage Domain Supply** This is the group of supply pins for the pad supply of the GPY112. This supply has to provide a nominal voltage of V_{DDP} = 2.5 V or 3.3 V, with a worst case tolerance of ±5% at the respective corners. *Note: For optimal power consumption, the lowest possible voltage is selected in the system.*
28	**VDDL**	PWR		**Low-Voltage Domain Supply** This is the group of supply pins for the low-voltage domain, which supplies mixed signal blocks in the PMA of the GPY112. The supply has to provide a nominal voltage of V_{DDL} = 1.0 V, with a worst case tolerance of ±5%.
12,17,53	**VDDC**	PWR		**Core Voltage Domain Supply** This is the group of supply pins for the core voltage domain. It supplies the digital core blocks of the GPY112. This supply has to provide a nominal voltage of V_{DDL} = 1.0 V with a worst case tolerance of ±5%.
EPAD[1)]	**VSS**	GND		**General Device Ground**

1) The EPAD is the exposed pad at the bottom of the package. This pad must be properly connected to the PCB ground plane.

The product (or Product) mentioned in this data sheet are no longer being manufactured and may not be ordered (OBS)

3 Functional Description

Figure 9 shows a block diagram of the GPY112 device. It also outlines the relationship of the device pins to the main functional blocks. The following sections introduce the functionality of these blocks in more detail.

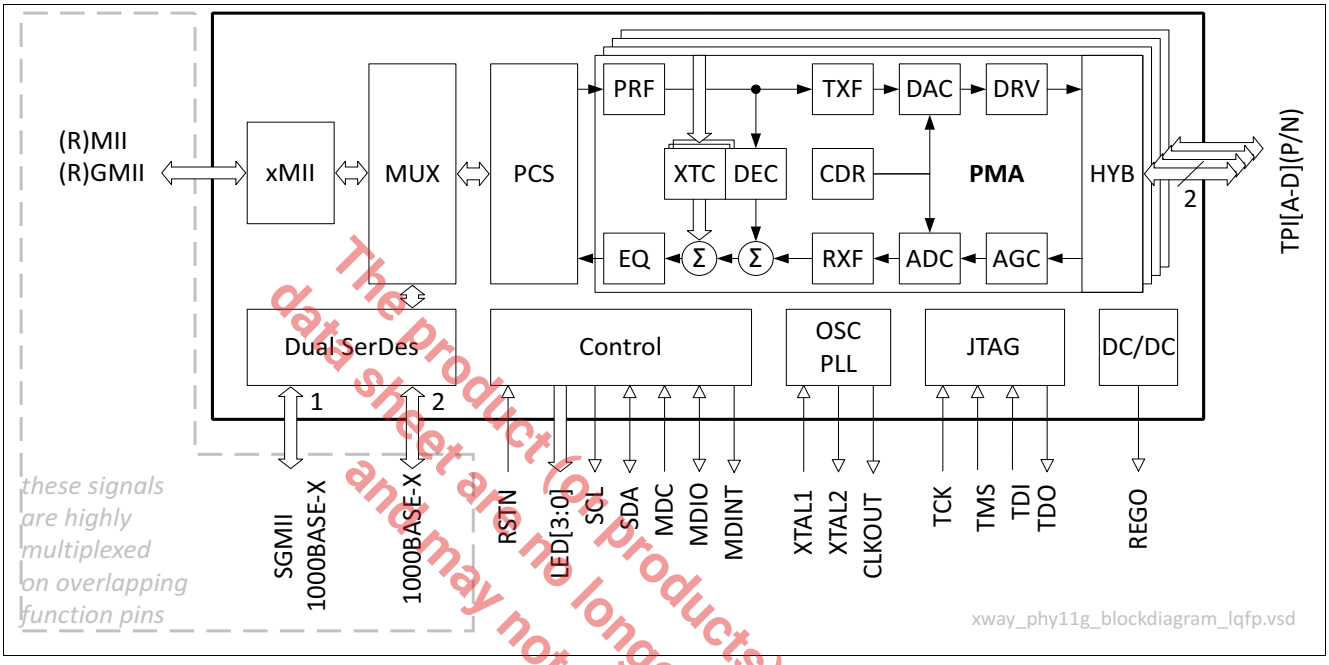

Figure 9 Functional High-Level Block Diagram of GPY112

The product (or products) mentioned in this data sheet are no longer being manufactured and may not be ordered (OBS)

3.1 Modes of Operation

The GPY112 supports various MII types, such as RMII, RGMII, (G)MII and SGMII. These can be combined with two MDI modes of operation, namely those based on copper or fiber (1000BASE-X). This section outlines the supported combinations of these interfaces, as illustrated in Table 9.

Table 9 MII and MDI Combinations Supported by GPY112

xMII Mode (Chapter 3.2.1)	MDI Mode (Chapter 3.3.1)			
	10BASE-T(e)	100BASE-TX	1000BASE-T	1000BASE-X
RMII	X	X		
(G)MII	X	X	X	
RGMII	X	X	X	X
SGMII	X	X	X	

In general, a particular combination of MIIs and MDIs defines one of 4 different data flows:

- Copper flow
- Fiber flow
- Media-converter flow
- Dual-media flow

The flows can be configured via pin-strapping (see Chapter 3.4.1) or after an EEPROM boot (see Chapter 3.4.2), and are controlled by means of the MDIO interface pins (see Chapter 3.4.3).

3.1.1 Copper Flow

In the copper flow, the GPY112 operates as a standard multi-speed twisted-pair copper PHY, according to the standards defining the 10BASE-T(e), 100BASE-TX and 1000BASE-T modes of operation on the MDI. All the xMII-supported MII interface types may be used to connect to a MAC-layer device. Note that the data rate of the MDI can be restricted by the MII type used. For example, the RMII does not support the higher rates of the 1000BASE-T mode. Refer to **Table 9** for details.

3.1.2 Fiber Flow

In the fiber flow, the GPY112 operates as a standard fiber PHY, according to the standards defined in 1000BASE-X and similar modes of operation on the MDI. Fiber interfaces are supported by means of the integrated SerDes operating at 1.25 Gbaud. Note that the SerDes pins are shared or multiplexed with the conventional MII interface pins. Not all supported MII interface types can be used in the fiber mode. In particular, only RGMII is supported.

3.1.3 Media Converter Flow

In this type of data-flow configuration, the GPY112 acts as an interface between a fiber-based MDI and a copper-based MDI. In this configuration, the device does not require a MAC connection. It can operate fully unmanaged, meaning that no management entity needs to be connected to the MDIO interface.

The media-converter flow only supports the 1000 Mbit/s data rate, converting the flow of data between 1000BASE-X and 1000BASE-T. The GPY112 uses auto-negotiation to resolve the proper conversion configuration. The copper MDI is forced into the correct speed mode by restricting the auto-negotiation feature to using only 1000BASE-T in full-duplex and half-duplex mode.

3.1.4 Dual-Media Flow

In this type of data-flow configuration, the GPY112 interfaces a copper MDI together with a second MDI that can be either copper-based or fiber-based. Only one of the two MDIs can be active at any one time. The GPY112 multiplexes the configured xMII1 to one of the two MDIs.

In the dual-media configuration, the GPY112 interfaces with both a copper MDI and a fiber MDI. Of these, only one can be active at any one time. The copper medium is accessed over the TPI. The fiber medium is accessed via SerDes-2 in 1000BASE-X mode, which can be connected to an FO module. Selection of the MDI can either be forced or automatic. In the latter case, the GPY112 permanently scans for activity on both MDIs. The next auto-selection only happens after a link-down event. Note that the same MII type restrictions apply as in the fiber-only flow, and therefore only RGMII is supported.

Attention: In this mode, there is no independent RX clock generated inside the device for the RGMII interface. The TX clock input to the device itself looped back as RX clock.

The product (or products) mentioned in this data sheet are no longer being manufactured and may not be ordered (OBS)

3.2 Media-Independent Interfaces (MII)

This section describes the supported MIIs of the GPY112. Each individual MII mode is investigated in detail and its particular requirements and properties are outlined.

3.2.1 X-speed Media-Independent Interface (xMII)

This section investigates all functional aspects of the xMII interface block.

3.2.1.1 xMII Signal Multiplexing

The GPY112 deals with the large variety of standard MAC interfaces (MIIs) by converting the different signaling schemes into native internal MII signals according to IEEE 802.3 **[1]**. This conversion is done by the xMII block on the GPY112, as illustrated in **Figure 9**.

Table 10 summarizes the assignment of xMII pins to standard MAC interface signals according to **Chapter 2.2.4**.

Table 10 xMII Signal Multiplexing (Physical Pin Names in Bold)

xMII				SerDes		
				1		2
MII	**RMII**	**GMII**	**RGMII**	**SGMII**	**1000BASE-X**	**1000 BASE-X**[1)]
MII_TXC	–	–	–	–	–	–
–	REFCLK	**TX_CLK**	TXC	SCP	–	–
–	–	**TXD7**	TXD3	SCN	–	–
–	–	**TXD6**	TXD2	SOP	TDP1	–
–	TXD1	**TXD5**	TXD1	SON	TDN1	–
–	TXD0	**TXD4**	TXD0	SIP	RDP1	–
TXD3	TX_EN	**TXD3**	TX_CTL	SIN	RDN1	–
TXD2	–	**TXD2**	–	–	–	TDP2
TXD1	–	**TXD1**	–	–	–	TDN2
TXD0	–	**TXD0**	–	–	SIGDET	SIGDET
TX_ER	–	**TX_ER**	–	–	–	RDP2
TX_EN	–	**TX_EN**	–	–	–	RDN2
RX_CLK	CLK50[2)]	**RX_CLK**	RXC	–	–	–
–	–	**RXD7**	–	–	–	–
–	–	**RXD6**	–	–	–	–
–	–	**RXD5**	–	–	–	–
–	–	**RXD4**	–	–	–	–
RXD3	–	**RXD3**	RXD3	–		–
RXD2	–	**RXD2**	RXD2	–	–	–
RXD1	RXD1	**RXD1**	RXD1	–	–	–
RXD0	RXD0	**RXD0**	RXD0	–	–	–
RX_ER	RX_ER	**RX_ER**		–	–	–
RX_DV	CRS_DV	**RX_DV**	RX_CTL	–	–	–
CRS	–	**CRS**	–	–	–	–
COL	–	**COL**	–	–	–	–

1) 1000BASE-X is not an xMII MAC interface, but is listed here to clarify the pin assignment.

2) By default, a free-running 50 MHz clock is sourced at RX_CLK in RMII mode and can be used as REFCLK.

The product(or products) mentioned in this data sheet are no longer being manufactured and may not be ordered (OBS)

Simultaneous use of the interfaces for the various settings of FLOW and MODE, as defined in **Media-Independent Interface Control** register and **Table 17**, is further illustrated in **Table 11**. In this table, dMII refer to the xMII interface of the GPY112, but excluding the analog SGMII and 1000BASE-X interfaces.

The ANEG column reflects the sequence of auto-negotiation when two interfaces, both of which incorporate auto-negotiation, are involved.

For example, “TPI/1000BASE-X → SGMII” means that auto-negotiation over either TPI or 1000BASE-X will happen first (depending on which interface is active), and the SGMII interface would then be set up to auto-negotiate according to the outcome of the first auto-negotiation.

Table 11 Operation of Various Interfaces for Different FLOW and MODE Settings

FLOW	MODE	dMII	SERDES1	SERDES2	TPI	ANEG	RATE (Mbit/s)
Copper	RGMII	RGMII	unused	unused	used	TPI	10/100/1000
Copper	SGMII	unused	SGMII	unused	used	TPI → SGMII	10/100/1000
Copper	RMII	RMII	unused	unused	used	TPI	10/100
Copper	GMII	GMII	unused	unused	used	TPI	1000
Copper	MII	MII	unused	unused	used	TPI	10/100
Copper	SGMII_NC	unused	SGMII_NC	unused	used	TPI → SGMII	10/100/1000
Fiber	FIBER_RGMII	RGMII	unused	1000BASE-X	unused	1000BASE-X	1000
Dual	DUAL_RGMII	RGMII	unused	c1: 1000BASE-X[1)]	c2: used	1000BASE-X or TPI	1000
Conv	CONV_X2T1000	unused	1000BASE-X_NA	unused	used	TPI	1000
Conv	CONV_X2T1000A	unused	1000BASE-X	unused	used	1000BASE-X → TPI	1000

1) c1 and c2 refer to the choices available in this mode.

3.2.1.2 xMII Signal Conditioning

To reduce the cost in materials and effort for the PCB layout, the GPY112 supports extended signal conditioning on the xMII, as depicted in **Figure 10**. The high-speed MAC interface signals are internally conditioned such that only a straight strip wire is required to connect a MAC device to the GPY112 in the receive direction. In particular, this means that configurable[1)] series termination resistors are integrated into the driving pad. Additionally, the RX_CLK and TX_CLK pins implement an adjustable delay line that allows for skewing of the clock with respect to the data. This guarantees correct data samplings in both the MAC and PHY devices.

For MAC devices that do not support internal signal conditioning, an appropriately dimensioned series resistance needs to be included on the PCB. Signal conditioning on the xMII is valid for all non-SerDes interfaces such as MII, GMII and RGMII. The integrated delay is only intended for use with the RGMII.

The product (or products) mentioned in this data sheet are no longer being manufactured and may not be ordered. (OPS)

1) Note that tuning of outputs are not required in standard designs using PCB traces with characteristic impedance of 50 Ω. Further, this tuning is not user-configurable.

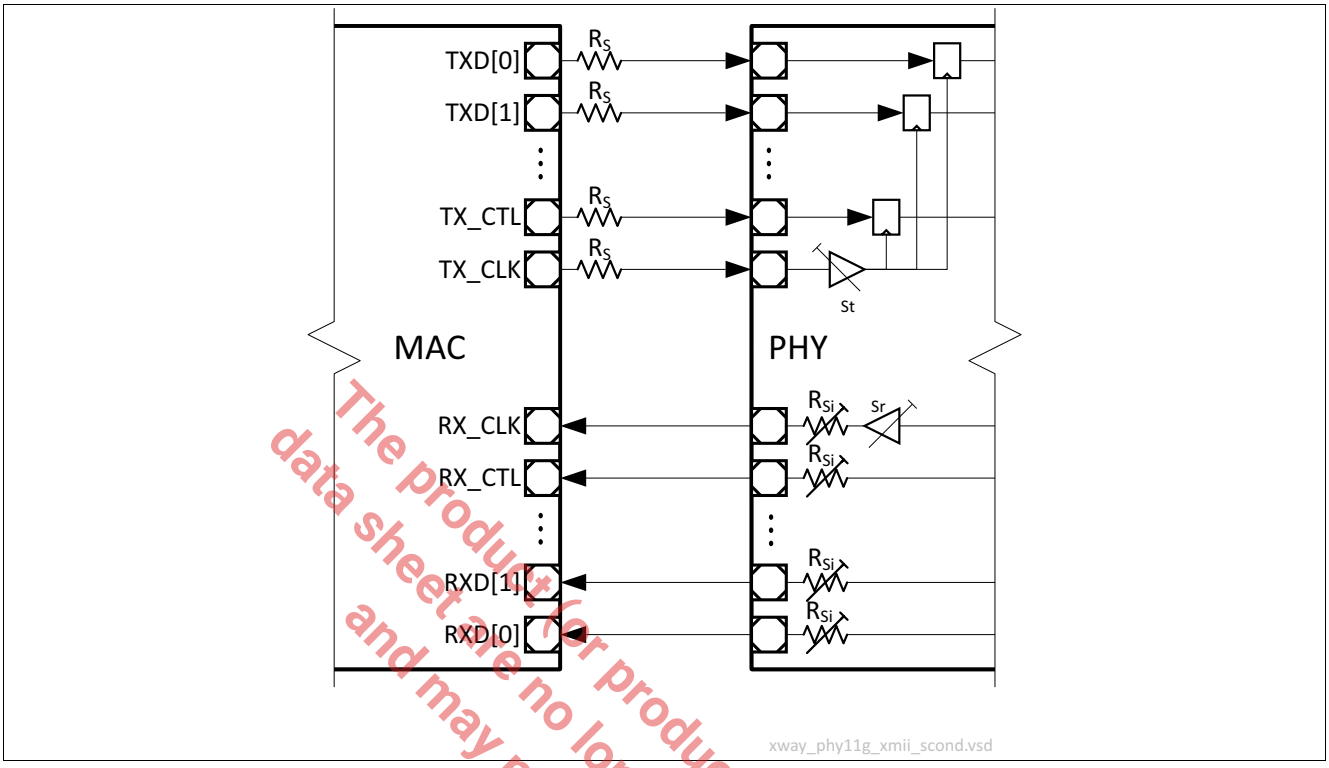

Figure 10 xMII Signal Conditioning between MAC and GPY112

The product(s) mentioned in this data sheet are no longer being manufactured and may not be ordered (OBS)

3.2.2 Reduced Media-Independent Interface (RMII)

The Reduced Media-Independent Interface (RMII) implements a MAC interface with a reduced pin count, but only supporting speeds of 10 Mbit/s and 100 Mbit/s. If the MAC interface is configured in RMII mode, then the GPY112 device does not negotiate 1000 Mbit/s functionality and therefore behaves like a fast Ethernet PHY.

The RMII is fully compliant with the specification of the RMII consortium **[11]**. The pin-to-signals mapping is defined in **Table 10**. As a special feature of the GPY112, the RX_CLK pin drives a continuous 50 MHz clock that can be used as the reference clock (CLK50). This clock is free-running and not locked to the receiver clock. The elastic buffering as required by **[11]** is performed in the PHY. The RX_CLK pin can be connected to the REFCLK pins of both the PHY and the MAC devices.

3.2.3 Gigabit Media-Independent Interface (GMII)

The Gigabit Media-Independent Interface (GMII) implements implements a MAC interface supporting all speed grades, that is at data rates of 10 Mbit/s, 100 Mbit/s and 1000 Mbit/s. For data rates below 1000 Mbit/s, the MII mode is selected, otherwise the GMII mode is selected. The pin-to-signal mapping for either interface is defined in **Table 10**. The MII and GMII are fully compliant with the specifications in IEEE 802.3 **[1]**, clause 22 and 35 respectively.

In the GMII mode, the frequency on the TX_CLK pin is assumed to be of 125 MHz. In MII mode, the signal on this pin is not used. Instead, an MII_TXC is driven at frequencies of 2.5 MHz and 25 MHz respectively, for speeds of 10 Mbit/s and 100 Mbit/s. This clock is not driven in GMII mode.

The receive clock is driven on pin RX_CLK in any of these modes, at clock frequencies of 2.5 MHz, 25 MHz and 125 MHz respectively, for speeds of 10 Mbit/s, 100 Mbit/s and 1000 Mbit/s.

When changing link speed, the clock frequency of the respective signals must also be changed. It is assumed that no glitches occur on TX_CLK (GTX_CLK). Correspondingly, no glitches occur on either MII_TXC or RX_CLK during link speed changes. When the link speed is changed, it is assumed that the MAC sets the TX_EN (TX_CTL) signal to logic zero in order to prevent corruption of data.

The AC characteristics of the MII and the GMII are investigated in **Chapter 6.6.6** and **Chapter 6.6.8**, respectively.

The supported test loops (see **Chapter 3.6.3**) can be activated at any time. The speed at which a test loop operates depends on the state of the transceiver. Activating a test loop during an active link implies that the currently selected link speed, for example after auto-negotiation (**Chapter 3.3.2**) or auto-downspeed (**Chapter 3.3.3**) is used. Otherwise, the test loop is operated at the link speed grade specified by the registers (0.13) and (0.6).

3.2.4 Reduced Gigabit Media-Independent Interface (RGMII)

The RGMII implements a MAC interface that can be used for all supported speeds, that is at 10 Mbit/s, 100 Mbit/s and 1000 Mbit/s, but with a reduced pin count when compared to a GMII. This interface is implemented according to the RGMIIv1.2 **[9]** and RGMIIv2.0[1] **[10]** specification, and is therefore referred to as RGMII-ID. The mapping of standardized signals to device pins is defined in **Table 10**.

The transfer of data between the MAC and PHY devices is handled via a clock signal, a control signal and a four-bit data vector in both the transmit and receive directions. The clock signal is always driven by the signal source, that is the MAC in the transmit direction and PHY in the receive direction. The control and data signals change with both the rising and falling edges of the driving clock.

The nominal driving clock frequency at data speeds in gigabits is of 125 MHz. Lower speeds of 10 Mbit/s and 100 Mbit/s can be achieved by reducing the clock frequency to 2.5 MHz and 25 MHz respectively. At these speed grades, the higher half of the data octet has no content. Instead, the GPY112 device accepts a replicated version of TXD[3:0] on the falling clock edge, thus reducing power consumption. This is not possible for the TX_CTL and RX_CTL control signals, as these still need to multiplex the GMII_TX_EN/GMII_TX_ER and the GMII_RX_EN/GMII_RX_DV signals.

In order to reduce the power consumption on this interface, the RGMII specification defines a special coding of these control signals such that:

```
TX_EN = GMII_TX_EN
TX_ER = GMII_TX_EN XOR GMII_TX_ER
RX_EN = GMII_RX_EN
RX_ER = GMII_RX_DV XOR GMII_RX_ER
```

The TX_CTL signal transports the TX_EN subject to the rising edge, whereas TX_ER is driven by the falling edge of the TX_CLK. The RX_CTL signal is defined in the same way as TX_CTL. The exact encoding for TX_CTL and RX_CTL is depicted in **Table 12** and **Table 13**, respectively. As can be seen in **Table 13**, the GPY112 supports in-band status via RGMII.

The AC characteristics of the RGMII are specified in **Chapter 6.6.9**. In order to simplify PCB design, the GPY112 supports XMII signal conditioning between MAC and PHY, as described in **Chapter 3.2.1.2**. The clock signals can be delayed using a programmable skew value, in order to obtain a robust setup and hold the time relationships between the clock and the data/control signals at the receiving pins. The programmability of the skew value addresses the particularities of the given PCB environment in which the GPY112 device is embedded.

Supported test loops (**Chapter 3.6.3**) can be activated at any time. The speed at which the test loop operates depends on the state of the transceiver. Activating a test loop during an active link implies that the currently selected link speed, for example after auto-negotiation (**Chapter 3.3.2**) or auto-downspeed (**Chapter 3.3.3**) is used. Otherwise the test loop is operated at the speed grade specified by the registers (0.13) and (0.6).

The product (or products) mentioned in this data sheet are no longer being manufactured and may not be ordered (OBS)

1) HSTL logic drivers are not supported. Instead standard LVTTL drivers are used.

Table 12 Transmit Control Encoding

TX_CTL	GMII_TX_EN	GMII_TX_ER	TXD[7:0]	Description
↑0↓0	0	0	00_H...FF_H	Normal inter-frame
↑0↓1	0	1	00_H	Reserved
↑0↓1	0	1	01_H	Low-power IDLE assert
↑0↓1	0	1	02_H...$0E_H$	Reserved
↑0↓1	0	1	$0F_H$	Carrier extend
↑0↓1	0	1	10_H...FE_H	Reserved
↑0↓1	0	1	$1F_H$	Carrier-extend error
↑0↓1	0	1	20_H...FF_H	Reserved
↑1↓1	1	0	00_H...FF_H	Transmit data frame
↑1↓0	1	1	00_H...FF_H	Transmit error propagation

Table 13 Receive Control Encoding

RX_CTL	GMII_RX_DV	GMII_RX_ER	RXD[7:0]	Description	PHY Status
↑0↓0	0	0	$xxx0xxx0_B$	Normal inter-frame	Link down
			$xxx1xxx1_B$		Link up
↑0↓0	0	0	$x00xx00x_B$	Normal inter-frame	RX_CLK = 2.5 MHz
			$x01xx01x_B$		RX_CLK = 25 MHz
			$x10xx10x_B$		RX_CLK = 125 MHz
			$x11xx11x_B$		Reserved
↑0↓0	0	0	$0xxx0xxx_B$	Normal inter-frame	Half-duplex mode
			$1xxx1xxx_B$		Full-duplex mode
↑0↓1	0	1	00_H	Reserved	
↑0↓1	0	1	01_H	Low-power IDLE assert	
↑0↓1	0	1	02_H...$0D_H$	Reserved	
↑0↓1	0	1	$0E_H$	False carrier indication	False carrier present
↑0↓1	0	1	$0F_H$	Carrier extend	EXTEND
↑0↓1	0	1	10_H...FE_H	Reserved	
↑0↓1	0	1	$1F_H$	Carrier-extend error	ZERO, ONE
↑0↓1	0	1	20_H...FE_H	Reserved	
↑0↓1	0	1	FF_H	Carrier sense	PLS_Carrier.Indicate
↑1↓1	1	0	00_H...FF_H	Receive data frame	ZERO, ONE
↑1↓0	1	1	00_H...FF_H	Receive data error	ZERO, ONE

The product (or Product(s) mentioned in this data sheet) are no longer being manufactured and may not be ordered (OBS)

3.2.5 Serial Gigabit Media-Independent Interface (SGMII)

The Serial Gigabit Media-Independent Interface (SGMII) implements a MAC interface that can be used for all supported speeds, namely 10 Mbit/s, 100 Mbit/s and 1000 Mbit/s. This interface is implemented according to the SGMII **[13]** specification.

The mapping of the standardized signals to the device pins is shown in **Table 10**. Note that the integrated SGMII uses Clock and Data Recovery (CDR) to extract the TXCLK clock from the TX data. This significantly reduces cost and power.

The RXCLK is driven as specified by the standard, but can be switched off via MDIO to reduce power, in case the MAC also supports CDR.

The AC characteristics of the SGMII are described in **Chapter 6.6.10**.

Supported test loops (**Chapter 3.6.3**) can be activated at any time.

The external circuitry required to connect the GPY112 properly via SGMII is described in **Chapter 6.9.6**.

The product (or products) mentioned in this data sheet are no longer being manufactured and may not be ordered (OBS)

3.3 Media Functions

This chapter describes the media functions supported by the GPY112.

3.3.1 Media-Dependent Interfaces (MDI)

This section describes the Media-Dependent Interfaces (MDIs) that are supported by the GPY112.

3.3.1.1 Copper Interface

The Twisted-Pair Interface (TPI) of the GPY112 is fully compliant with IEEE 802.3 [1]. To facilitate low-power implementation and reduce PCB costs, the series resistors that are required to terminate the twisted-pair link to nominally 100 Ω are integrated into the device. As a consequence, the TPI pins (see Chapter 2.2.3) can be directly connected via the transformer to the RJ45 plug. Additional external circuitry is only required for proper common-mode termination and rejection.

The electrical characteristics of the transformer and the plug are outlined in Chapter 6.9.3 and Chapter 6.9.4, respectively. A high-level schematic of the TPI circuitry is shown in Figure 11, taking these components into account.

The twisted-pair wires are connected to the RJ45 plug pins according to the specification in [5]. The common-mode external circuitry is described in Chapter 6.9.5.

Note that the twisted-pair port C is terminated with high-precision, high-ohmic resistors R_{CAL}, which are in turn connected to the common-mode ground. This configuration is only required for the port C and is used to auto-calibrate the IC after reset.

The product(s) mentioned in this datasheet are no longer being manufactured and may not be ordered (OBS)

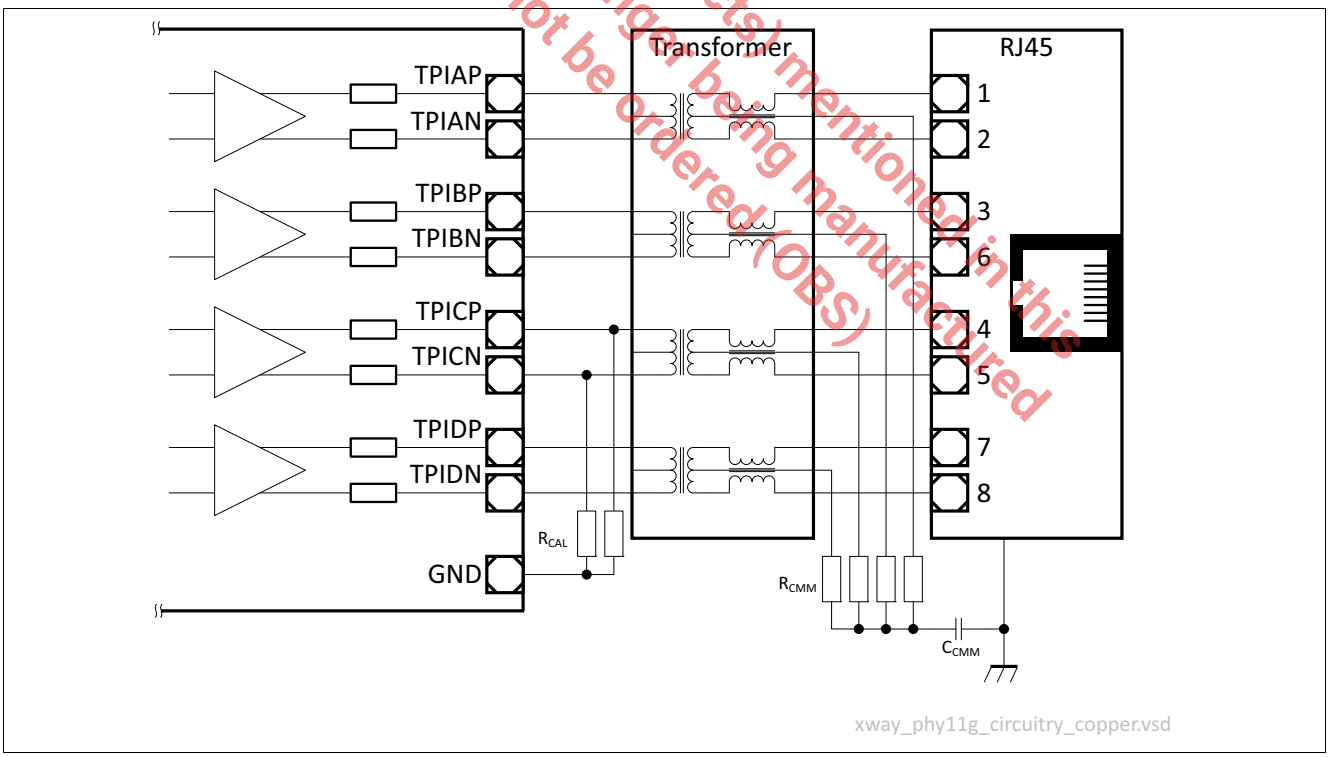

Figure 11 Twisted-Pair Interface of GPY112 Including Transformer and RJ45 Plug

3.3.1.2 Fiber Interface

Using the integrated SerDes module, the GPY112 supports fiber-based PHY Ethernet applications compliant with IEEE 802.3, clause 36 [1] (1000BASE-X). 1000BASE-X-specific auto-negotiation, according to IEEE 802.3 clause 37 [1], is also supported. A signal-detect input is optionally available to indicate the signal status from the optics module to the GPY112. This input is used in the particular case of dual-media applications, for auto-selection of the active interface. The external circuitry and wiring connection to the optics module is specified in Chapter 6.9.7. Accordingly, Chapter 6.6.11 specifies the timing characteristics of this interface.

Note that the integrated SerDes is compatible with both 1000BASE-X and the SGMII standard, which in turn means that the differential high-speed pins can operate in both modes, depending on the configuration.

The fiber interface supports only speeds of 1000 Mbit/s; it is only compatible with gigabit-speed MIIs.

3.3.2 Auto-Negotiation

The GPY112 supports self-contained Auto-Negotiation (ANEG) as a startup procedure to exchange capability information with the link partner. Unless ANEG is manually disabled using the `MDIO.STD.CTRL.ANEN` register, the GPY112 will initiate each link-up using an ANEG procedure. This is recommended by the IEEE and essentially required for the 1000BASE-T mode.

ANEG is done after the following events:

- Power up
- Software power up (`MDIO.STD.CTRL.PD` = $\downarrow 0_B$)
- Hardware reset
- Software reset (`MDIO.STD.CTRL.RST` = $\downarrow 0_B$)
- Command to restart ANEG (`MDIO.STD.CTRL.ANRS` = $\uparrow 1_B$)
- Link-down

Unless otherwise configured, the GPY112 carries out an auto-crossover detect/enable procedure prior to the start of the ANEG process. This ensures optimal interoperability even in inadequate cable infrastructure environments. However, if ANEG is disabled, the auto-crossover procedure is still done during link-up. More details are given in Chapter 3.3.4.

The implementation of the ANEG procedure is compliant with the standards given in IEEE 802.3, clause 28 ([1]). If the link partner does not support ANEG, the GPY112 extracts the link-speed configuration using parallel detection. Once this is detected, the PHY links up at the speed of the link partner. Since the duplex mode cannot be extracted during parallel detection, the duplex mode is set to half-duplex, which also works in case the link partner operates in full-duplex mode. Since ANEG is a mandatory feature for 1000BASE-T transceivers, the GPY112 only does parallel detection for 10BASE-T and 100BASE-TX.

The default advertisements during ANEG are according to standard. Chapter 3.4 specifies how these settings can be overwritten with other values.

The GPY112 supports Next Page (NP) exchange, since this is mandatory for advertising 1000BASE-T capabilities. By default, NPs are exchanged autonomously and do not require interaction with any management device. If no NPs are intended to be transmitted by the management device, the `MDIO.STD.AN_NPTX.NP` register bit should be set to logic 1_B.

If the GPY112 is configured in a particular MAC interface mode which does not support all PHY speeds, the ANEG-capability registers are automatically restricted to the MAC speeds possible. More details about the MAC interfaces and the supported speed modes are listed in Table 9.

When the GPY112 is configured to operate with a MAC via the SGMII, the SGMII also incorporates auto-negotiation on the MAC-to-PHY interface. This auto-negotiation is automatically initiated by the GPY112 whenever there are link-speed changes on the TPI. This means that, after ANEG is completed on the TPI-side, the link speed is advertised to the MAC via the SGMII ANEG capability.

The product (or product(s)) mentioned in this datasheet are no longer being manufactured and may not be ordered (OBS).

3.3.3 Auto-Downspeed

The Auto-Downspeed (ADS) feature ensures maximum interoperability even in harsh or inadequate cable infrastructure environments. In particular, ADS is applied during 1000BASE-T training. This is necessary because the information available about the cabling during ANEG is insufficient. It is possible to advertise 1000BASE-T during ANEG, even though it might happen that both link partners are connected via a CAT-3 cable, which does not support the 4-pair Gigabit Ethernet mode. In order to avoid continuous link-up failures in such a situation, the GPY112 operates a detection algorithm to identify this situation. As a consequence, Gigabit-capability indication is cleared from the ANEG registers. After the resulting link-down, the next ANEG process does not advertise 1000BASE-T anymore, such that even when the link partner does not implement this kind of ADS algorithm, the next link-up will be done at the next advertised speed below 1000 Mbit/s.

It can also happen that the existing cable infrastructure is adequate, but that the integrity of received signals is not suitable for a 1000BASE-T link-up, for example due to increased alien noise, or over-length cables. If such a condition is detected, the GPY112 also does an ADS procedure.

Finally, it can also happen that, even though the GPY112 is able to link up properly, for example in slave mode, the link partner is not able to. In this situation, ADS criterion described previously does not become active, but the link also never comes up. In order to address this corner situation, the GPY112 counts the number of attempts to link up to 1000BASE-T. If this number is greater than 3, the ADS procedure is carried out. This number is reset internally after each successful 1000BASE-T link-up.

In all flow and mode settings that support only speeds of 1000 Mbit/s, the ADS feature is automatically disabled.

3.3.4 Auto-Crossover and Polarity-Reversal Correction

In order to maximize interoperability even in inadequate wiring environments, the GPY112 supports auto-crossover[1)] and polarity-reversal detection and correction. Both features are enabled by default.

Auto-crossover detection and correction operates at all supported twisted-pair speeds. The supported pair-mappings detectable and correctable by the device are listed in Table 14. However, in 10BASE-T and 100BASE-TX, pairs C and D are not used. Consequently, mode 2 and 3 as well as 1 and 4 are identical. However, in 1000BASE-T all modes are applicable.

The auto-crossover functionality is fully compliant with IEEE 802.3 [1], clause 40.4.4, in 1000BASE-T mode. In the 10BASE-T and 100BASE-TX modes, this functionality depends on the detection of valid link pulses.

The Product (or products) mentioned in this data sheet are no longer being manufactured and may not be ordered (OBS)

Table 14 Supported Twisted-Pair Mappings

Crossover Modes on a RJ45[1)]		RJ45 Pinning							
#	**Description**	**1**	**2**	**3**	**4**	**5**	**6**	**7**	**8**
1	Normal, straight CAT5 cable	TPIAP **(A+)**	TPIAN **(A-)**	TPIBP **(B+)**	TPICP **(C+)**	TPICN **(C-)**	TPIBN **(B-)**	TPIDP **(D+)**	TPIDN **(D-)**
2	Fast Ethernet-only MDI-X	TPIBP **(B+)**	TPIBN **(B-)**	TPIAP **(A+)**	TPICP **(C+)**	TPICN **(C-)**	TPIAN **(A-)**	TPIDP **(D+)**	TPIDN **(D-)**
3	Full Gigabit Ethernet MDI-X	TPIBP **(B+)**	TPIBN **(B-)**	TPIAP **(A+)**	TPIDP **(D+)**	TPIDN **(D-)**	TPIAN **(A-)**	TPICP **(C+)**	TPICN **(C-)**
4	Normal, straight CAT5 cable with C/D pair-swap	TPIAP **(A+)**	TPIAN **(A-)**	TPIBP **(B+)**	TPIDP **(D+)**	TPIDN **(D-)**	TPIBN **(B-)**	TPICP **(C+)**	TPICN **(C-)**

1) Pin assignment according to TIA/EIA-568-A/B

Polarity-reversal errors caused by improper wiring are automatically corrected by the GPY112. This correction is done on all pairs in the receive direction for all supported twisted-pair media modes. In 10BASE-T mode, the

1) A subset of this feature is also known as MDI/MDI-X from 10BASE-T and 100BASE-TX.

polarity correction is based on the detection of valid link pulses. In 100BASE-TX, the polarity of the receive signal is inherently corrected by the negation invariance of line code. In the 1000BASE-T mode, polarity detection is part of the training sequence. In all the modes, the detected polarity is frozen once the link has been established, and remains unchanged until the link is dropped.

The status of the polarity detection is indicated in `MDIO.PHY.PHYSTAT1` (**PHY_PHYSTAT1**). Polarity can also be controlled using `MDIO.PHY.PHYCTL1` (**PHY_PHYCTL1**).

3.4 Configuration, Control and Status Functions

This chapter investigates control and configuration of the GPY112. It distinguishes between control and configuration operations. Configuration of the device can be done either via pin-strappings (**Chapter 3.4.1**) or via configuration content on an external EEPROM (**Chapter 3.4.2**). Configuration and control can be done using the MDIO interface (**Chapter 3.4.3.1**), according to IEEE 802.3 **[1]**. Furthermore, the chapter outlines how status information can be extracted from the GPY112, either using the LED pins (**Chapter 3.4.4**), or by using a higher-level management entity on the MDIO interface together with an external interrupt (**Chapter 3.4.3.3**).

Figure 12 illustrates the configuration flow in the form of a flow chart. Note that configuration is only performed once after hardware reset or power-up. A simple software reset does not restart the configuration sequence. MDIO configuration and control access can only start after the configuration sequence has finished. The GPY112 indicates the time at which this is possible by clearing the MDIO reset register (`MDIO.STD.CTRL.RST` = 0_B).

The product (or products) mentioned in this data sheet are no longer being manufactured and may not be ordered (OBS)

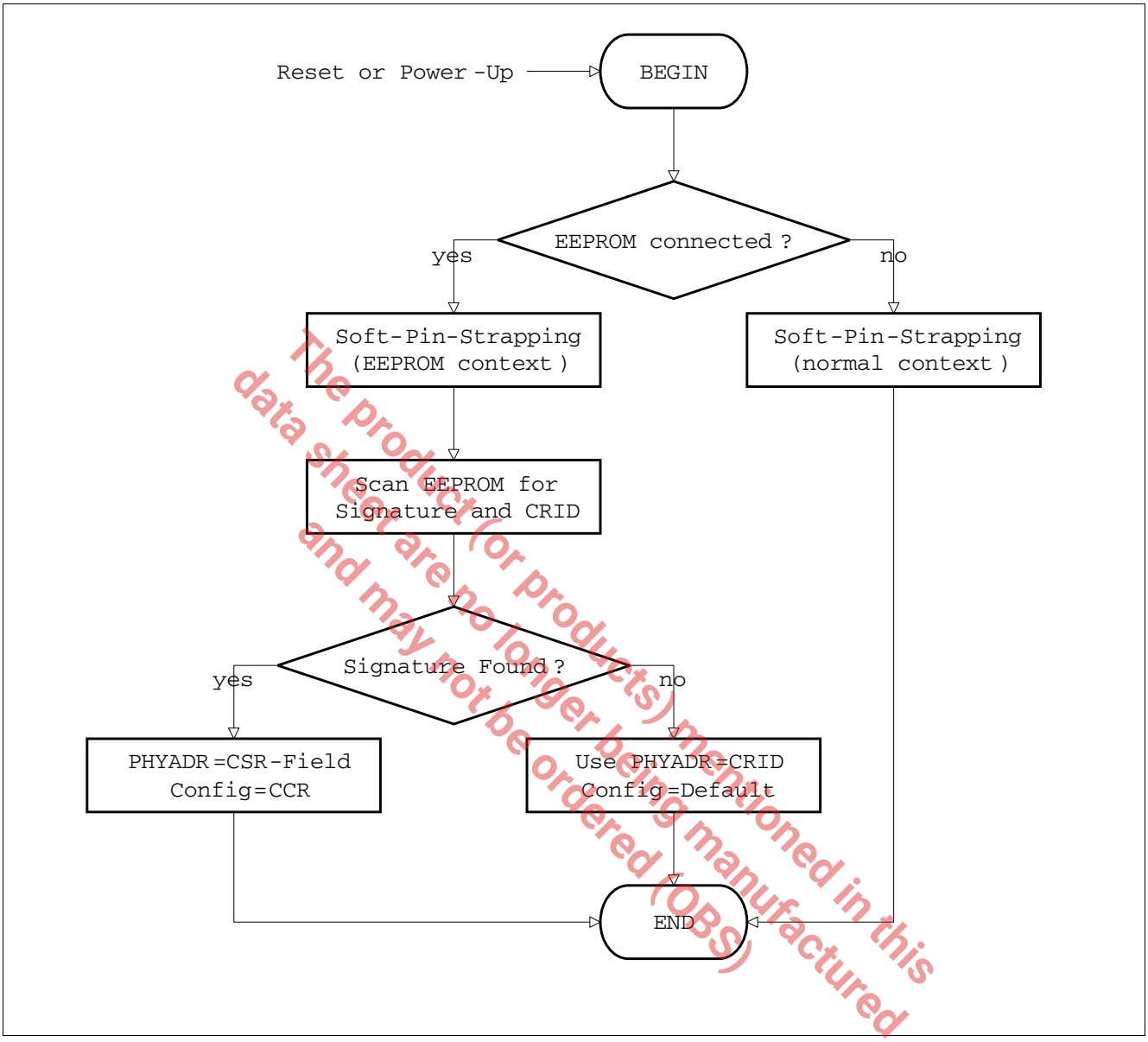

The product (or products) mentioned in this data sheet are no longer being manufactured and may not be ordered (OBS)

Figure 12 Overview of the Configuration Flow

3.4.1 Configuration of GPY112 via Pin-Strapping

This section describes the configuration of the GPY112 by means of pin-strapping. The limited pin count of the device means that reserving enough pins to encode all the configuration bits (by simply pulling these pins to V_{DDP} or V_{SS} in order to encode a logic one or zero respectively) is not a feasible option. Instead, the device supports soft pin-strapping using external resistors and capacitors[1)].

Using this technology, an entire bit vector can be read on one pin, instead of just a single configuration bit. The content of the bit vector is determined by the component value of the pull-down resistor or capacitance used. The component value of this resistor is measured by the GPY112 shortly after reset.

A schematic of the required external circuitry is shown in **Figure 13**.

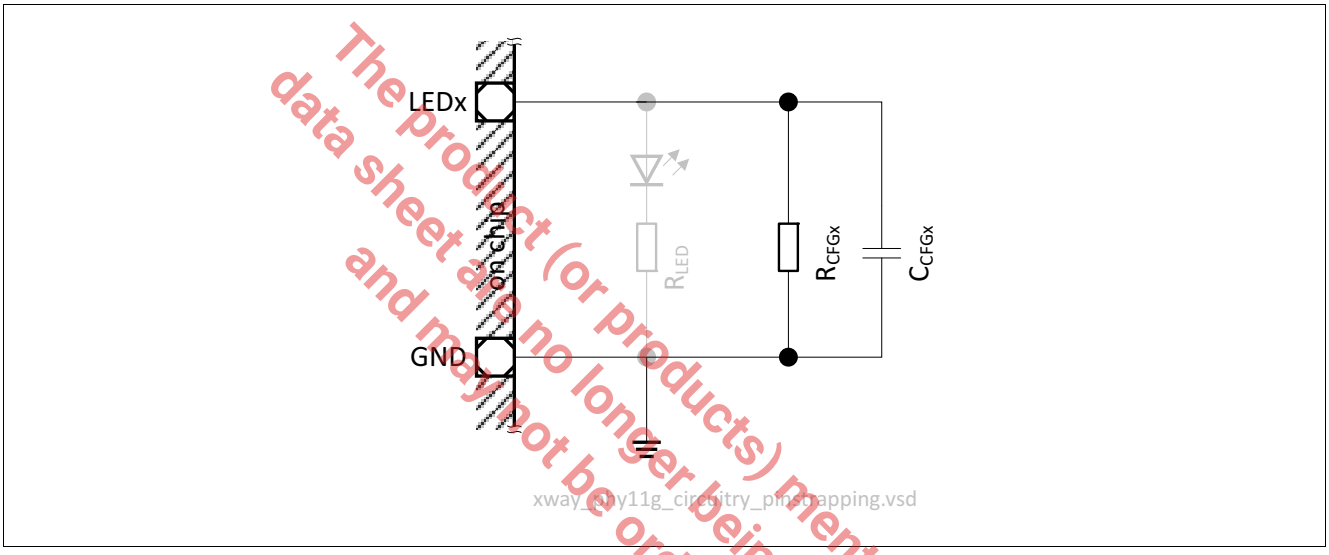

Figure 13 Soft Pin-Strapping External Circuitry

The product (or products) mentioned in this data sheet are no longer being manufactured and may not be ordered (OBS)

As shown in the figure, a further saving in pin count is achieved by sharing the pins used to drive LEDs (LEDx) with the pin-strapping configuration. The choice of soft pin-strapping configuration component values is such that normal LED operation is left unaffected. The LED components are shown in gray in **Figure 13**. Note that the pin-strapping passive components weakly tie the LEDx pin to the chip's ground. More details on the external circuitry for using LEDs can be found in **Chapter 3.4.4**.

A 4-bit vector is encoded by the appropriate choice of component values. The relationship between component values and the soft pin-strapping bit vector is shown in **Table 15**.

1) The encoding of soft pin-strappings is such that the use of external capacitors is rarely needed.

Table 15 Soft Pin-Strapping: Mapping of Pull-Down Capacitance/Resistor Values to Configuration Bits

Capacitance Value[1]	Resistor Value[2]	Soft Pin-Strapping Configuration Bit Vector CBV[3:0]			
		CBV[3]	CBV[2]	CBV[1]	CBV[0]
Not mounted, 0 nF	11.00 kΩ	0_B	0_B	0_B	0_B
	8.66 kΩ	0_B	0_B	0_B	1_B
	6.81 kΩ	0_B	0_B	1_B	0_B
	5.23 kΩ	0_B	0_B	1_B	1_B
	3.92 kΩ	0_B	1_B	0_B	0_B
	2.74 kΩ	0_B	1_B	0_B	1_B
	1.78 kΩ	0_B	1_B	1_B	0_B
	0.91 kΩ	0_B	1_B	1_B	1_B
Mounted, 100 nF	11.00 kΩ	1_B	0_B	0_B	0_B
	8.66 kΩ	1_B	0_B	0_B	1_B
	6.81 kΩ	1_B	0_B	1_B	0_B
	5.23 kΩ	1_B	0_B	1_B	1_B
	3.92 kΩ	1_B	1_B	0_B	0_B
	2.74 kΩ	1_B	1_B	0_B	1_B
	1.78 kΩ	1_B	1_B	1_B	0_B
	0.91 kΩ	1_B	1_B	1_B	1_B

1) A maximum tolerance of 10% on temperature and aging must be guaranteed. Ceramic-type capacitors are suggested.
2) A maximum tolerance of 1% on temperature and aging must be guaranteed. Resistances are taken from the E96 series.

The product (or products) mentioned in this data sheet are no longer being manufactured and may not be ordered (OBS)

The soft pin-strapping configuration is read from all four LED pins after device reset. It is possible to encode a total of 16 information bits. **Table 16** outlines the mapping of bits to the supported pin-strapping device parameters. In this table, each row represents a bit vector read from one of the configuration pins. Each column corresponds to a bit position in the configuration bit vector. Note that this table is only valid in the case that no EEPROM is connected to the GPY112. If a configuration EEPROM is connected, the soft pin-strapping device parameters are mapped to different functions, as described in **Table 18**. **Chapter 3.4.2** gives more details on EEPROM-based device configuration.

Table 16 Mapping of Configuration Pins/Bits to Device Parameters (No EEPROM Connected)

Configuration Pin	CBV[3:0] associated by resistor value according to Table 15			
	CBV[3]	CBV[2]	CBV[1]	CBV[0]
LED0	MDIOADR[3]	MDIOADR[2]	MDIOADR[1]	MDIOADR[0]
LED1	MDIOADR[4]	MODE[1]	MODE[0]	FLOW[0]
LED2	CONF[1]	CONF[0]	ANEG[1]	ANEG[0]
LED3	SIGDET_POL	CONF[2]	MODE[2]	FLOW[1]

The functions of the device parameters mapped in **Table 16** are described in **Table 17**.

Table 17 Functions of Device Parameters Controlled by Soft Pin-Strapping (No EEPROM Connected)

Device Parameter	Function
MDIOADR[4:0]	Sets the MDIO PHY address to which the GPY112 responds during MDIO transactions.
FLOW[1:0]	Specifies the signal flow of the GPY112. 00_B **Copper** - MAC interface to twisted-pair signal flow 01_B **Fiber** - MAC interface to fiber (1000BASE-X, SerDes) signal flow 10_B **Dual-Media** - MAC interface to twisted-pair or fiber signal flow (auto-select) 11_B **Converter** - converts fiber (1000BASE-X, SerDes) to twisted pair *Note: The specific mode for each FLOW is configured by the MODE pin*
MODE[2:0]	Configures the functional mode of the GPY112. The meaning of these bits depends on the FLOW setting. **FLOW = Copper:** 000_B **RGMII** - RGMII to copper 001_B **SGMII** - SGMII to copper 010_B **RMII** - RMII to copper (speed is forced to 10/100 Mbit/s) 100_B **GMII** - GMII to copper (10/100/1000 Mbit/s, MII-mode with10/100 Mbit/s) 110_B **SGMII-NC** - SGMII without clock to copper 111_B **reserved** **FLOW = Fiber:** 000_B **RGMII** - RGMII to 1000BASE-X (SerDes 2) 001 - 111_B **reserved** **FLOW = Dual-Media:** 000_B **RGMII** - RGMII to copper or fiber (1000BASE-X, SerDes 2) 001 - 111_B **reserved** **FLOW = Converter (SerDes 1):** 000_B **X2T1000** - convert 1000BASE-X (without ANEG) to 1000BASE-T 001_B **X2T1000A** - convert 1000BASE-X (with ANEG) to 1000BASE-T 010 - 111_B **reserved**
CONF[2:0]	Used to specify the transmit and receive timing skew in the RGMII mode using the integrated delay generation on TX_CLK/RX_CLK. The meaning of these bits depends on the FLOW setting.[1)] In the case of the RGMII-RGMII dual-media mode, the CONF parameter is used to determine the transmit and receive timing skew on MII1. **FLOW = Copper:** $XX0_B$ **RGMII_TXSKEW_1N5** - Transmit timing skew is 1.5 ns $XX1_B$ **RGMII_TXSKEW_0N0** - Transmit timing skew is 0.0 ns $X0X_B$ **RGMII_RXSKEW_1N5** - Receive timing skew is 1.5 ns $X1X_B$ **RGMII_RXSKEW_0N0** - Receive timing skew is 0.0 ns **FLOW = Dual-Media:** $XX0_B$ **RGMII_TXSKEW_1N5** - Transmit timing skew is 1.5 ns $XX1_B$ **RGMII_TXSKEW_0N0** - Transmit timing skew is 0.0 ns $X0X_B$ **RGMII_RXSKEW_1N5** - Receive timing skew is 1.5 ns $X1X_B$ **RGMII_RXSKEW_0N0** - Receive timing skew is 0.0 ns

The product (or products) mentioned in this data sheet are no longer being manufactured and may not be ordered (OBS).

Table 17 Functions of Device Parameters Controlled by Soft Pin-Strapping (No EEPROM Connected)

Device Parameter	Function
ANEG[1:0]	Configures the auto-negotiation behavior of the GPY112. The meaning of these bits depends on the FLOW setting. **FLOW = Copper:** 00_B **DEFAULT** - advertise 10/100/1000 Mbit/s in both full and half duplex 01_B **FASTHDX** - advertise 10/100 Mbit/s in half duplex and 1000 Mbit/s in both full and half duplex 10_B **GIGAONLY** - advertise only 1000 Mbit/s in both full and half duplex 11_B **FASTONLY** - advertise only 10/100 Mbit/s in both full and half duplex **FLOW = Fiber:** $X0_B$ **FDX** - advertise full duplex $X1_B$ **HDX** - advertise half duplex $0X_B$ **ENABLED** - ANEG enabled $1X_B$ **DISABLED** - ANEG disabled **FLOW = Dual-Media:** 00_B **DEFAULT** - advertise 10BASE-T/100BASE-TX/1000BASE-T/1000BASE-X in both full and half duplex 01_B **FASTHDX** - advertise 10BASE-T/100BASE-TX in half duplex and 1000BASE-T/1000BASE-X in both full and half duplex 10_B **FDXONLY** - advertise only 1000BASE-T/1000BASE-X in full duplex 11_B **HDXONLY** - advertise only 1000BASE-T/1000BASE-X in half duplex **FLOW = Converter:** 00_B **reserved** 01_B **reserved** 10_B **reserved** 11_B **reserved**
SIGDET_POL	Configures the polarity of the signal-detect pin. 0_B **Active Low** 1_B **Active High**

1) The initial duplex mode is determined by the default value of `MDIO.STD.CTRL.DPLX`.

The product (or products) mentioned in this data sheet are no longer being manufactured and may not be ordered (OBS)

Table 18 Mapping of Configuration Pins/Bits to Device Parameters (EEPROM is Connected)

Configuration Pin	CBV[3:0] associated by resistor value according to Table 15			
	BV[3]	BV[2]	BV[1]	BV[0]
LED0	0_B	SPEED[1]	SPEED[0]	ADRMODE
LED1	SIZE[1]	DEVADR[2]	DEVADR[1]	DEVADR[0]
LED2	SIZE[0]	CRID[2]	CRID[1]	CRID[0]
LED3	SCAN[3]	SCAN[2]	SCAN[1]	SCAN[0]

The functions of the device parameters mapped in Table 18 are defined in Table 19.

Table 19 Functions of Device Parameters controlled by Soft Pin-Strapping (EEPROM is Connected)

Device Parameter	Function
ADRMODE	**Specifies the EEPROM Addressing Mode** 0_B **11-bit** EEPROM addressing mode (see also Chapter 3.4.2.4.1) 1_B **16-bit** EEPROM Addressing Mode (see also Chapter 3.4.2.4.2)
DEVADR[2:0]	**Specifies the EEPROM Device Address** The device address can be specified in case multiple EEPROM devices are connected to the same I^2C bus. The valid mapping of device address bits into the frame is specific to the ADRMODE (see Chapter 3.4.2.4 for more details). In general, the DEVADR bits are mapped MSB-aligned into bits 3:1 of the I^2C instruction field. Note that some larger devices in 11-bit mode also use these bits for internal addressing. The GPY112 supports this feature, meaning that the DEVADR is OR-combined with the corresponding memory address bits. It is important to apply logic zeros wherever this overlap is present. In 11-bit addressing mode there are overlays for EEPROMs with a capacity larger than 4 kb.
CRID[2:0]	**Specifies the Configuration Record ID** The configuration record ID can be specified in case multiple PHYs source information from an EEPROM device, in which case this contains multiple configuration record ID entries. The CRID is part of the configuration record ID header, allowing for storage of one distinct record for each PHY accessing the EEPROM (see Chapter 3.4.2.4 for more details). Note that in case the CRID is not found in the EEPROM, the GPY112 uses the specified CRID as the MDIO address, with the two MSBs set to zero.
SPEED[1:0]	**Specifies the EEPROM Access Speed** 00_B **STANDARD** - EEPROM is accessed at F_{SCL} = 100 kHz serial clock speed 10_B **FASTMODE** - EEPROM is accessed at F_{SCL} = 400 kHz serial clock speed 01_B **MEGASPEED** - EEPROM is accessed at F_{SCL} = 1 MHz serial clock speed 11_B **HIGHSPEED** - EEPROM is accessed at F_{SCL} = 3.4 MHz serial clock speed

The product (s / products) mentioned in this data sheet are no longer being manufactured and may not be ordered (OBS)

Table 19 Functions of Device Parameters controlled by Soft Pin-Strapping (EEPROM is Connected)

Device Parameter	Function
SIZE[1:0]	**Specifies the EEPROM Scan Size** This parameter defines the EEPROM scan size, which is the address range of the EEPROM in which the configuration record (more details in Chapter 3.4.2.3) is searched for during boot-up or after reset of the GPY112. The physical size of the EEPROM is less important. The configuration signature record may contain pointer addresses to an address beyond the limit specified here. The scan starts at EEPROM address 0000_H. In order to yield a constant worst-case scan time over all supported EEPROM scan sizes, the address increment for the EEPROM configuration record scan is adjusted automatically, depending on the scan size, as follows: **ADRMODE = 0_B:** SIZE[1:0] = 00_B**<2 kb** - scan up to 256 byte-addresses in steps of 32 SIZE[1:0] = 01_B**4 kb** - scan up to 512 byte-addresses in steps of 64 SIZE[1:0] = 10_B**8 kb** - scan up to 1024 byte-addresses in steps of 128 SIZE[1:0] = 11_B**16 kb** - scan up to 2048 byte-addresses in steps of 256 **ADRMODE = 1_B:** SIZE[1:0] = 00_B**32 kb** - scan up to 4096 byte-addresses in steps of 512 SIZE[1:0] = 01_B**64 kb** - scan up to 8192 byte-addresses in steps of 1024 SIZE[1:0] = 10_B**128 kb** - scan up to 16384 byte-addresses in steps of 2048 SIZE[1:0] = 11_B**>256 kb** - scan up to 32768 byte-addresses in steps of 4096
SCAN[3:0]	**Specifies the EEPROM Scan Step Size** The scan step size is the address increment used to scan through the address range of the EEPROM to detect the header of the configuration signature record (more details in Chapter 3.4.2.3). See also the definition of SIZE[1:0] above. A value of SCAN = 0000_B or SCAN = 1111_B defines the automatic mode as defined for the SIZE[1:0] parameter . In this mode, the scan step size is related to the EEPROM scan size, thus yielding a constant worst-case scan time during startup. The SCAN[3:0] parameter can be used to influence the address increment during the scan process to make it faster (larger address increment) or slower (smaller address increment), but with higher accuracy. In particular, SCAN is a parameter that modifies the automatically selected value by means of the SIZE parameter. **SCAN[3] = 0_B:** SCAN[2:0] = 001_B**<<1** - scan address increment is AUTO_INCREMENT*2 SCAN[2:0] = 010_B**<<2** - scan address increment is AUTO_INCREMENT*4 SCAN[2:0] = 011_B**<<3** - scan address increment is AUTO_INCREMENT*8 SCAN[2:0] = 100_B**<<4** - scan address increment is AUTO_INCREMENT*16 SCAN[2:0] = 101_B**<<5** - scan address increment is AUTO_INCREMENT*32 SCAN[2:0] = 110_B**<<6** - scan address increment is AUTO_INCREMENT*64 SCAN[2:0] = 111_B**<<7** - scan address increment is AUTO_INCREMENT*128 **SCAN[3] = 1_B:** SCAN[2:0] = 001_B**>>1** - scan address increment is AUTO_INCREMENT/2 SCAN[2:0] = 010_B**>>2** - scan address increment is AUTO_INCREMENT/4 SCAN[2:0] = 011_B**>>3** - scan address increment is AUTO_INCREMENT/8 SCAN[2:0] = 100_B**>>4** - scan address increment is AUTO_INCREMENT/16 SCAN[2:0] = 101_B**>>5** - scan address increment is AUTO_INCREMENT/32 SCAN[2:0] = 110_B**>>6** - scan address increment is AUTO_INCREMENT/64 SCAN[2:0] = 111_B**>>7** - scan address increment is AUTO_INCREMENT/128

The product (or products) mentioned in this datasheet are no longer being manufactured and may not be ordered (OPS)

3.4.2 Configuration of GPY112 via External EEPROM

This chapter describes the operation of the GPY112 with an externally connected EEPROM.

3.4.2.1 EEPROM Applications

Connection of an external EEPROM is used to enable the implementation of systems without any higher-level management entity to drive the control and configuration information on the MDIO interface (see **Chapter 3.4.3**). In addition, it is not possible to completely configure GPY112 functionality using only the soft pin-strapping interface (see **Chapter 3.4.1**). In such applications, the external EEPROM provides a cheap and efficient solution for storing all the configuration information that needs to be loaded by the GPY112 during startup.

The GPY112 supports various EEPROM devices by means of its I^2C interface (see **Chapter 2.2.5**, pins SDA and SCL). The devices supported are listed in **Table 20**. Devices from other silicon vendors that are not listed in **Table 20** and which support I^2C may also be supported, but are not tested by Intel.

The product(s) mentioned in this data sheet are no longer being manufactured and may not be ordered (OBS).

Table 20 Supported EEPROM Devices

Vendor	Device	Remark
AMTEL	AT24Cxx	Proper size selection by customers
CATALYST	CAT24Cxx	Proper size selection by customers
STM	M24Cxx	Proper size selection by customers

In the simplest application, the EEPROM is only used to store configuration information of the GPY112. In particular, this contains the defaults for the internal MDIO registers. This configuration is loaded by the GPY112 directly after reset or power-up if an EEPROM has been detected. In order to support the sharing of a larger EEPROM device by several master devices, for example if an additional microcontroller also loads its configuration from the same device, the GPY112 scans the EEPROM content for a particular signature that corresponds to its configuration record. The GPY112 loads this configuration record and overrides its internal defaults. A detailed description of the configuration record is given in **Chapter 3.4.2.3**.

A more sophisticated type of application is used to enhance the functionality of the GPY112 by loading embedded firmware from the external EEPROM. The integrated device controller on the GPY112 is able to execute code from the external EEPROM. In order to reduce the load on the I^2C interface, this code is loaded into the GPY112 before execution. It is possible to change the existing functionality by modifying parts of the integrated firmware, as well as to extend its functionality by adding new firmware blocks. Dedicated support from system vendor is required for this type of feature. The externally embedded firmware is also stored within the configuration record. Further details are specified in **Chapter 3.4.2.3**.

3.4.2.2 EEPROM Detection

The GPY112 automatically detects whether or not an external EEPROM is connected, by sensing the SDA pin during startup. Since the SDA pin is equipped with an internal pull-up resistor to comply with the I^2C specification, it is assumed that an EEPROM is connected when this pin is sensed as being at logic 1_B after reset. In case no external EEPROM is connected, it is required that this pin be pulled to ground, and thus sensed internally as being at 0_B after reset.

Attention: The SDA pin must not be left floating!

In case an EEPROM has been detected, the soft pin-strapping pins are used to properly configure the EEPROM. This includes information about speed, address mode, and slave device address. Refer to **Chapter 3.4.1** for more information.

If the GPY112 evaluates the SDA pin and detects an EEPROM device, it tries to access the EEPROM device by initiating a single byte read. If the device is present and understands the I^2C format, it will acknowledge the read instruction after a certain amount of time. The GPY112 waits for this acknowledgment, and if none is received

before a time-out, the attempt to access the EEPROM is aborted and no compatible device is assumed to be connected to the I^2C interface.

However, if the acknowledgment is successfully received, the GPY112 starts scanning the EEPROM content for a specific signature at the beginning of the Configuration Signature Record (CSR). The setup of the CSR is specified in **Table 21**. The signature is a sequence of predefined bytes: EE_H,$C0_H$,DE_H,$1F_H$. The GPY112 scans the entire EEPROM at address locations of k * STEP within the range of the predefined EEPROM size (see SIZE[3:0] in **Chapter 3.4.1**, **Table 18**). The STEP size is equal to SIZE / 64, so that for a 1 kb EEPROM the STEP size is STEP = 8 bytes. The STEP size can be modified from this default using the soft pin-strappings as defined in STEP[3:0] in **Chapter 3.4.1**, **Table 18**. If no signature is found, the GPY112 aborts the search and skips any further EEPROM read operations. If a signature is detected, the GPY112 reads the CSR. Note that the CSR contains the PHYADR that is used for MDIO communication (see **Chapter 3.4.3.1**). The MDIO address is used only after the CSR has been successfully read by the GPY112. Before this, the MDIO address is by default at logic 00000_B.

3.4.2.3 EEPROM Content

Table 21 depicts the Configuration Signature Record (CSR), containing the signature as well as several addresses. The signature is used to identify a part of the EEPROM content to be dedicated to the GPY112, in case several different devices share the same memory. The subsequent byte contains the CRID that is dedicated to a single GPY112 in case multiple GPY112 devices retrieve configuration data from the same EEPROM. The subsequent fields are only evaluated if the CSR and the configuration record ID match. The CRID must match the value specified by the pin-strapping configuration (see also **Chapter 3.4.1**). The first address contained in the CSR is the PHYADR used to address the MDIO messages to the correct device, in case the MDIO is shared. More details can be found in **Chapter 3.4.3.1**. If no CSR is found during the scan process, the MDIO address is set internally to PHYADR[4:3] = 00_B, PHYADR[2:0] = CRID[2:0]. The subsequent field contains the Configuration Content Record (CCR) base address (CCR_ADR), which is a 16-bit pointer address pointing to the start address location of the CCR on the same EEPROM, as defined in **Table 22**. In case no CCR exists, the CCR_ADR must be set to $FFFF_H$. The 2 bytes following the CCR_ADR field are reserved for internal use and must be set to $FFFF_H$.

The product (or products) mentioned in this datasheet are no longer being manufactured and may not be ordered (OBS)

Table 21 Configuration Signature Record (CSR)

Address[1]	Content								Comment
	7	**6**	**5**	**4**	**3**	**2**	**1**	**0**	
k * STEP + 0	1	1	1	0	1	1	1	0	**Configuration Record Signature**: EE_H,$C0_H$,DE_H,$1F_H$
k * STEP + 1	1	1	0	0	0	0	0	0	
k * STEP + 2	1	1	0	1	1	1	1	0	
k * STEP + 3	0	0	0	1	1	1	1	1	
k * STEP + 4	0	0	0	0	0	CRID[2:0]			Configuration record ID
k * STEP + 5	0	0	0	PHYADR[4:0]					PHY MDIO address
k * STEP + 6	CCR_ADR[15:8]								Configuration Content Record (CCR) base address. This vector must be set to CCR_ADR = $FFFF_H$ if no CCR exists.
k * STEP + 7	CCR_ADR[7:0]								
k * STEP + 8	1	1	1	1	1	1	1	1	Reserved for future use.
k * STEP + 9	1	1	1	1	1	1	1	1	Reserved for future use.

1) This is the byte-wise EEPROM address. The scheme is independent of the address mode used (11/16)

Table 22 Configuration Content Record

Address[1)]	Content								Comment
	7	6	5	4	3	2	1	0	
CCR_ADR + 0	NOCE[7:0]								Number of configuration entries. A value of 00_H corresponds to 1 entry. A value of FF_H corresponds to 256 entries.
CCR_ADR + 1	ADDR(1)[7:0]								Address (MDIO address) and configuration data word (MDIO data) for entry 1
CCR_ADR + 2	DATA(1)[15:8]								
CCR_ADR + 3	DATA(1)[7:0]								
CCR_ADR + 4	ADDR(2)[7:0]								Address (MDIO address) and configuration data word (MDIO data) for entry 2
CCR_ADR + 5	DATA(2)[15:8]								
CCR_ADR + 6	DATA(2)[7:0]								
CCR_ADR + ...	...								...
CCR_ADR + 3 * NOCE + 1	ADDR(NOCE)[7:0]								Address (MDIO address) and configuration data word (MDIO data) for entry #NOCE
CCR_ADR + 3 * NOCE + 2	DATA(NOCE)[15:8]								
CCR_ADR + 3 * NOCE + 3	DATA(NOCE)[7:0]								

1) This is the byte-wise EEPROM address. The scheme is independent of the address mode used (11/16)

The product (or products) mentioned in this data sheet are no longer being manufactured and may not be ordered (OPN).

3.4.2.4 EEPROM Frame Formats

This chapter specifies the EEPROM frame formats supported. In particular, a subset of the I^2C protocol is represented which is supported by most of the EEPROM devices on the market. In order to comply with almost all EEPROM devices currently available on the market, and in particular with larger sizes, two addressing modes are supported: 11-bit addressing and 16-bit addressing. Note that this addressing relates to the EEPROM internal data addressing and not to the I^2C device address mode. For the latter, the GPY112 only supports the standard 7-bit device address mode. In compliance with most of the available EEPROM devices, the default value of the device address is DADR[7:1] = $1010XXX_B$. The last three bits are configurable using the soft pin-strappings (see **Chapter 3.4.1**), which also contain a configuration bit for the addressing mode. The following sections specify the frame formats for both addressing modes. Mixed addressing mode operation is not supported by the GPY112.

3.4.2.4.1 Frame Formats in 11-Bit Addressing Mode

This addressing mode is used for the smallest available EEPROM devices. These devices are usually available in sizes ranging from 1 kb to 16 kb. Since the EEPROM devices are organized in 8-bit words, this requires between 7 and 11 address bits. However, only one address byte is defined following the I^2C instruction. Therefore, for larger EEPROM configurations, it is common practice to use up to 3 LSBs of the device address within the I^2C instruction to map these missing 3 bits. This is also illustrated in the frame structures specified in this chapter. In order to clarify this further, **Table 23** lists the address mappings for all supported EEPROM sizes.

Table 23 Address Bit Mapping in 11-Bit Addressing Mode

EEPROM Size	I²C Instruction Bit							Memory Content Address Byte							
	7	6	5	4	3	2	1	7	6	5	4	3	2	1	0
1 kb	1	0	1	0	DADR[2:0]			0	ADR[6:0]						
2 kb					DADR[2:0]			ADR[7:0]							
4 kb					DADR[2:1]			ADR[8:0]							
8 kb					[2]1)			ADR[9:0]							
16 kb					ADR[10:0]										

1) DADR[2]

The product (or products) mentioned in this data sheet are no longer being manufactured and may not be ordered (OBS)

Figure 14 shows the 3-byte frame format for a single-byte write operation to a random address on the EEPROM. For maximum compatibility, this is the only write frame format supported. Following a start bit (a falling edge on SDA while SCL is active high), the I²C instruction is sent, containing the default device address DADR[7:1] = $1010XXX_B$ that is applicable to almost all EEPROM devices available. The last bit in the instruction is a read/write bit which is set to low to indicate a write transaction.

The instruction byte is followed by an acknowledgment driven by the EEPROM. Following this acknowledgment, the GPY112 drives the memory address byte ADR[7:0], which also needs to be acknowledged by the EEPROM.

The last of the three bytes in the write operation frame contains the data byte to be written, DATA[7:0]. After a successful write operation, this byte is acknowledged by the EEPROM and the GPY112 ends the write operation frame with a stop bit.

In accordance with I²C, this stop bit is a rising edge on SDA while SCL is active high.

Table 23 showed how some devices exceed the address byte and therefore have to use parts of the device address. This is indicated in **Figure 14** by showing the assignment of the ADR[10:8] bits.

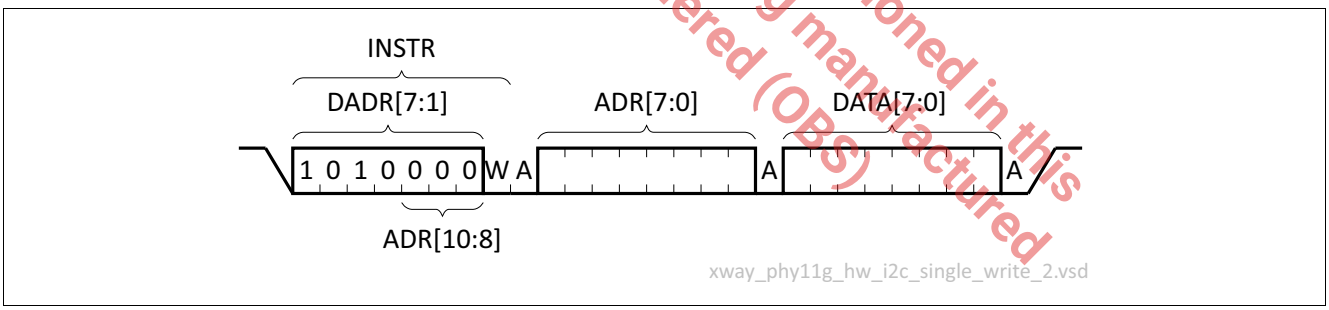

Figure 14 Timing Diagram for a Random Address Single Byte Write

Figure 15 shows a read frame similar to the write frame operation illustrated in **Figure 14**. In general, a read frame starts with a dummy write frame which lasts up to the write address. This is required to set the current address on the EEPROM. After acknowledgment of the address byte ADR[7:0], the GPY112 terminates the current dummy write by setting a new start bit. The instruction byte is repeated, except that the read/write bit is now set to active high to indicate that this instruction corresponds to a read access. Following acknowledgment of the read request, the EEPROM drives the desired read data byte DATA[7:0]. For a single read operation, the GPY112 does not acknowledge this byte, indicating that no further read is required. The read access is completed by the GPY112 driving the stop bit to SDA.

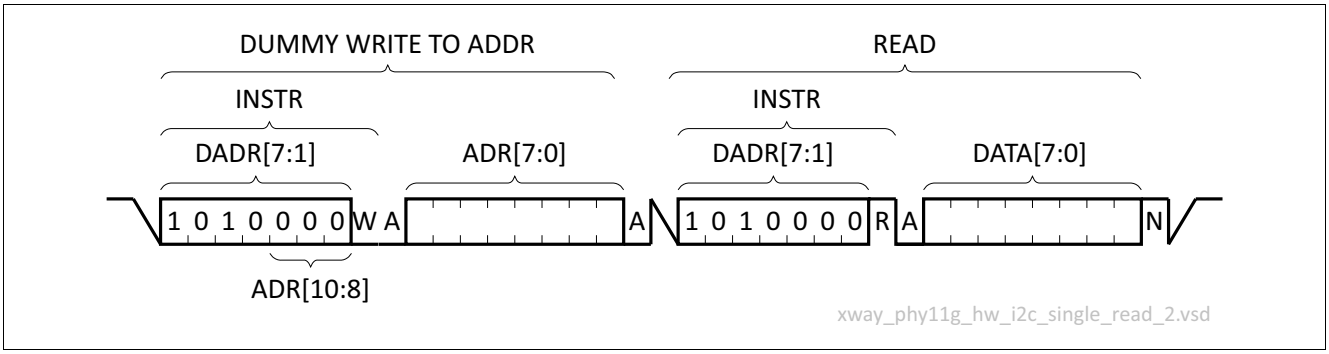

Figure 15 Timing Diagram for a Random Address Single Byte Read

A single-byte random read as depicted in **Figure 15** can easily be extended to a burst read. **Figure 16** shows the supported burst read frame structure. Note that the initialization of a burst-read access is the same as for a single-byte read. Therefore, the figure only shows the protocol sequence starting from the read instruction. Subsequent bytes are read from incrementing address locations, for as long as the GPY112 keeps acknowledging the read bytes driven by the EEPROM. The burst read access stops when the GPY112 does not acknowledge a read byte and instead issues the stop bit. The GPY112 uses the burst read operation only for the external firmware load feature. Normal configuration EEPROM-access operations are done using single-byte read/write operations.

The product (or products) mentioned in this data sheet are no longer being manufactured and may not be ordered (OBS).

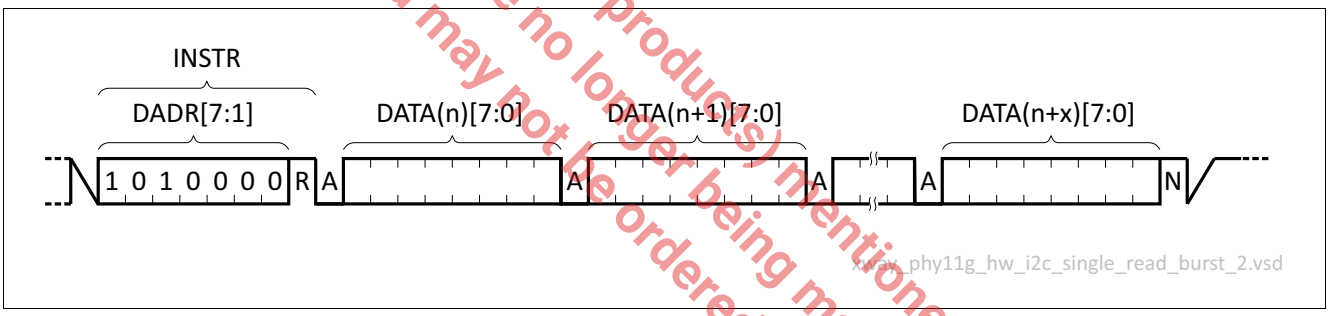

Figure 16 Timing Diagram for a Burst Read

3.4.2.4.2 Frame Formats in 16-Bit Addressing Mode

This addressing mode is used for the larger available EEPROM devices. These devices are usually available in sizes ranging from 32 kb up to 512 kb. Since the EEPROM devices are organized in 8-bit words, this requires 12 to 16 address bits. The larger storage space can be used for customized firmware code or for sharing among several devices by using I^2C functionality. In contrast to the 11-bit addressing mode, the 16-bit addressing mode uses two bytes following the I^2C instruction to encode the memory address. The three LSBs of the device address are available for selecting one out of eight EEPROM devices attached to the same I^2C serial bus. This device address is configurable using the soft pin-strappings as described in **Chapter 3.4.1**. In order to clarify this further, **Table 24** lists the address mappings for all supported EEPROM sizes.

Table 24 Address Bit Mapping in 16-Bit Addressing Mode

EEPROM Size	I²C Instruction Bit							1st Memory Content Address Byte								2nd Memory Content Address Byte							
	7	6	5	4	3	2	1	7	6	5	4	3	2	1	0	7	6	5	4	3	2	1	0
32 kb	1	0	1	0	X	X	X	0	0	0	0	ADR[11:0]											
64 kb					X	X	X	0	0	0	ADR[12:0]												
128 kb					X	X	X	0	0	ADR[13:0]													
256 kb					X	X	X	0	ADR[14:0]														
512 kb					X	X	X	ADR[15:0]															

Figure 17 shows the 4-byte frame format for a single-byte write operation to a random address on the EEPROM. For maximum compatibility, this is the only write frame format supported. Following a start bit (a falling edge on SDA while SCL is active high), the I²C instruction is sent, containing the default device address DADR[7:1] = $1010XXX_B$ that is applicable to almost all EEPROM devices available.

The last bit in the instruction is a read/write bit which is set to low to indicate a write transaction.

The instruction byte is followed by an acknowledgment driven by the EEPROM. Following this acknowledgment, the GPY112 drives the memory address bytes ADR[15:8] and ADR[7:0], both of which are also separately acknowledged by the EEPROM.

The last of the four bytes in the write operation frame contains the data byte to be written, DATA[7:0]. After a successful write operation, this byte is acknowledged by the EEPROM, and the GPY112 ends the write frame with a stop bit (a rising edge on SDA while SCL is active high).

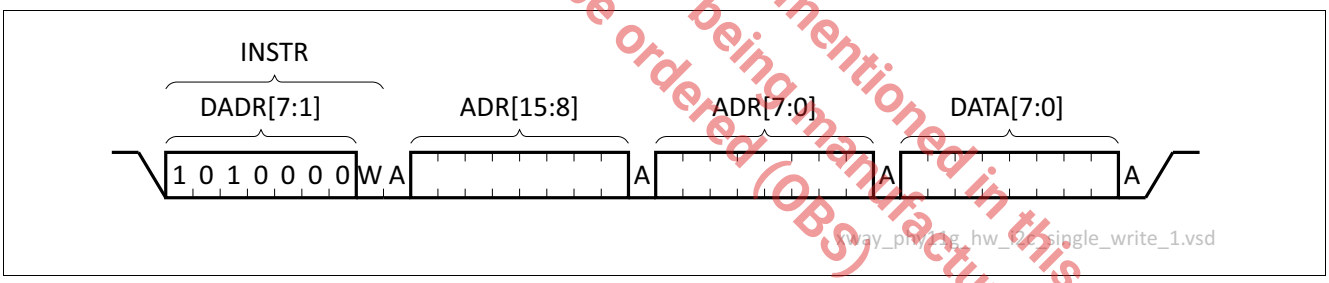

Figure 17 Timing Diagram for a Random Address Single Byte Write

Figure 18 shows a read frame similar to the write frame protocol illustrated in **Figure 17**. In general a read frame starts with a dummy write frame which lasts up to the write address. This is required to set the current address on the EEPROM. After acknowledgment of the address byte ADR[7:0], the GPY112 terminates the current dummy write by setting a new start bit. The instruction byte is repeated, except that the read/write bit is now set to active high to indicate that this instruction corresponds to a read access. Following acknowledgment of the read request, the EEPROM drives the desired read data byte DATA[7:0]. For a single read operation, the GPY112 does not acknowledge this byte, indicating that no further read is required. The read access is completed by the GPY112 driving the stop bit to SDA.

The product (or products) mentioned in this data sheet are no longer being manufactured and may not be ordered (OBS)

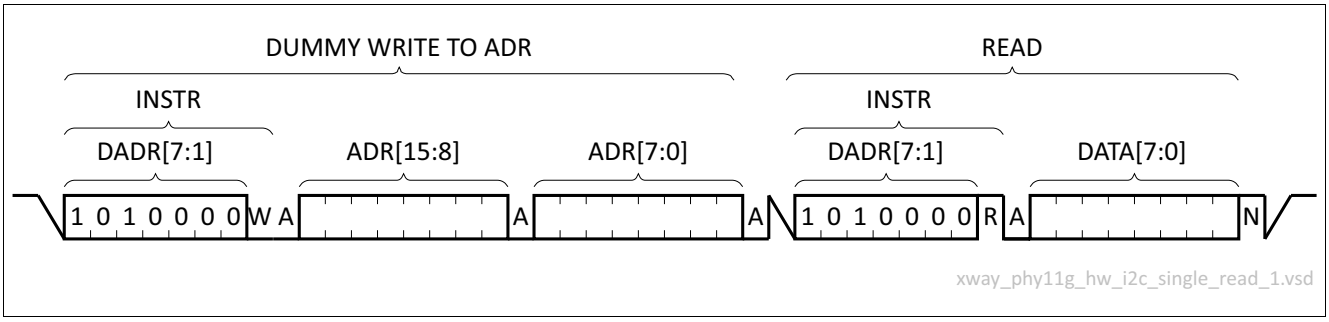

Figure 18 Timing Diagram for a Random Address Single Byte Read

A single-byte random read as depicted in **Figure 18** can easily be extended to a burst read. **Figure 19** shows the supported burst read frame structure. Note that the initialization of a burst-read access is the same as for a single-byte read. Therefore, the figure only shows the protocol sequence starting from the read instruction. Subsequent bytes are read from incrementing address locations, for as long as the GPY112 keeps acknowledging the read bytes driven by the EEPROM. The burst read access stops when the GPY112 does not acknowledge a read byte and instead issues the stop bit. The GPY112 uses the burst read operation only for the external firmware load feature. Normal configuration EEPROM-access operations are done using single-byte read/write operations.

The product (or products) mentioned in this data sheet are no longer being manufactured and may not be ordered (OBS)

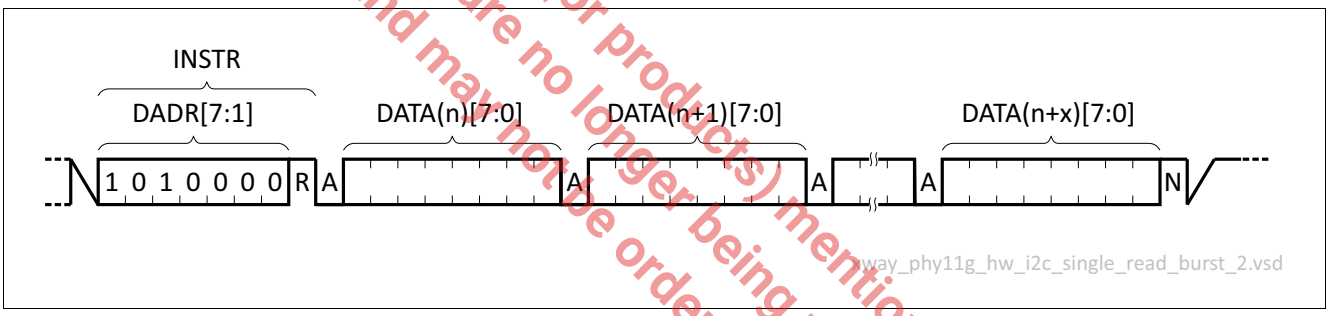

Figure 19 Timing Diagram for a Burst Read

3.4.2.4.3 EEPROM Access via MDIO

The GPY112 supports indirect access to the EEPROM via the MDIO interface. A special type of handshaking between the higher-level management entity and PHY is required for proper cycle-time arbitration. The flow charts in **Figure 20** and **Figure 21** illustrate this handshake mechanism for a write and a read cycle respectively. Note that only single-byte accesses are supported, as opposed to EEPROM burst-mode options, for better compatibility and simplicity. As can be seen from the flow charts, the first action before any operation is to check whether the EEPROM is busy or ready to use. This is done using the `PHY.EECTRL.EXEC` bit. This bit could still be set from a past write cycle or other internal means, preventing a current EEPROM access. Any access to the EEPROM is performed via MMD on device $1E_H$. The entire EEPROM is mapped onto this indirect MDIO addressable space (see also **Chapter 3.4.3.2**).

A write cycle is simply executed by setting address and write data in conjunction with the control bits. Once this is done, the GPY112 takes care of storing the byte into the EEPROM. A read cycle is similar, but after issuing a read access the higher-level management entity needs to wait until the data is read from the EEPROM. This is done by observing the `PHY.EECTRL.EXEC` (**PHY_EECTRL**) bit. After this, the read byte can be loaded from `STD.MMDDATA` (**STD_MMDDATA**).

Note that it would make sense to check on the availability of an external EEPROM using the `PHY.EECTRL.EEDET` bit. This is set to active when an external EEPROM has been detected by the GPY112.

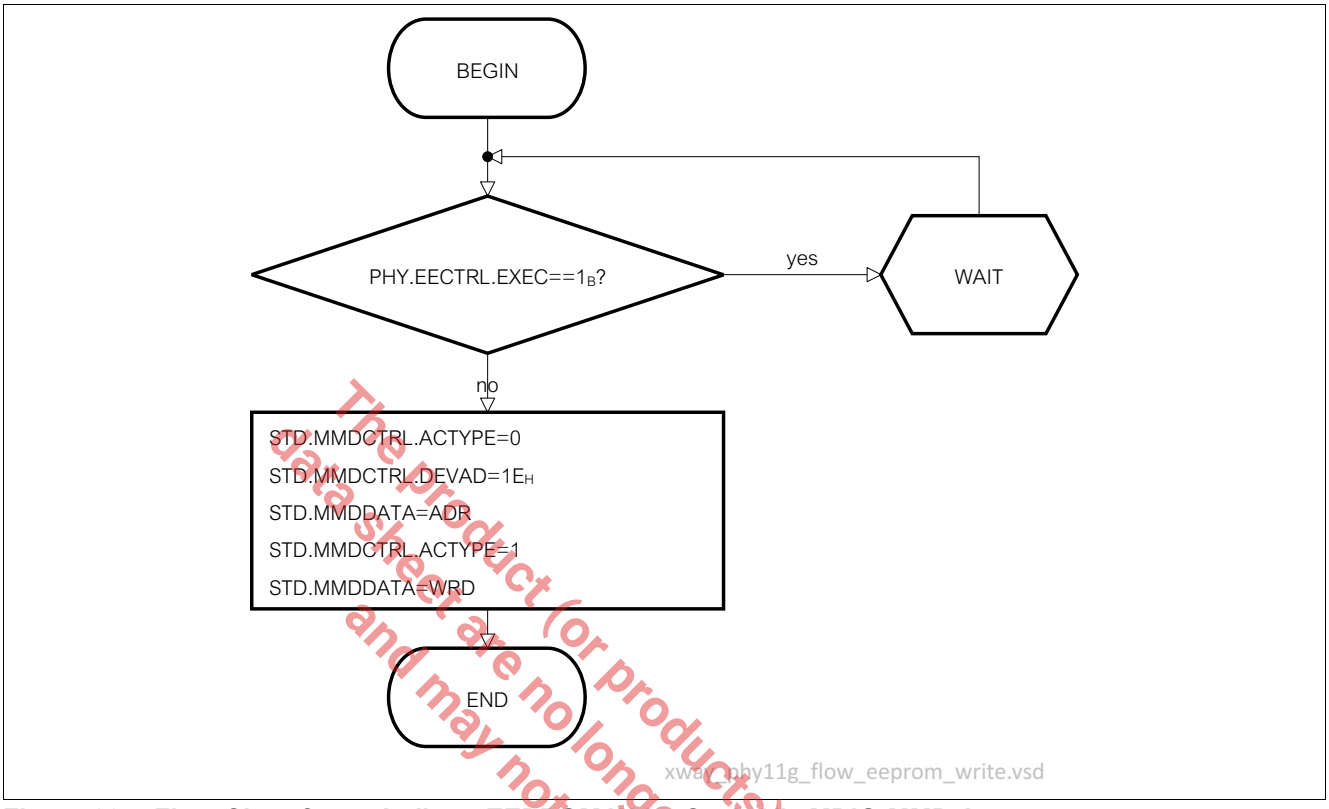

Figure 20 Flow-Chart for an Indirect EEPROM Write Cycle Via MDIO-MMD Access

The product (or products) mentioned in this data sheet are no longer being manufactured and may not be ordered (OBS)

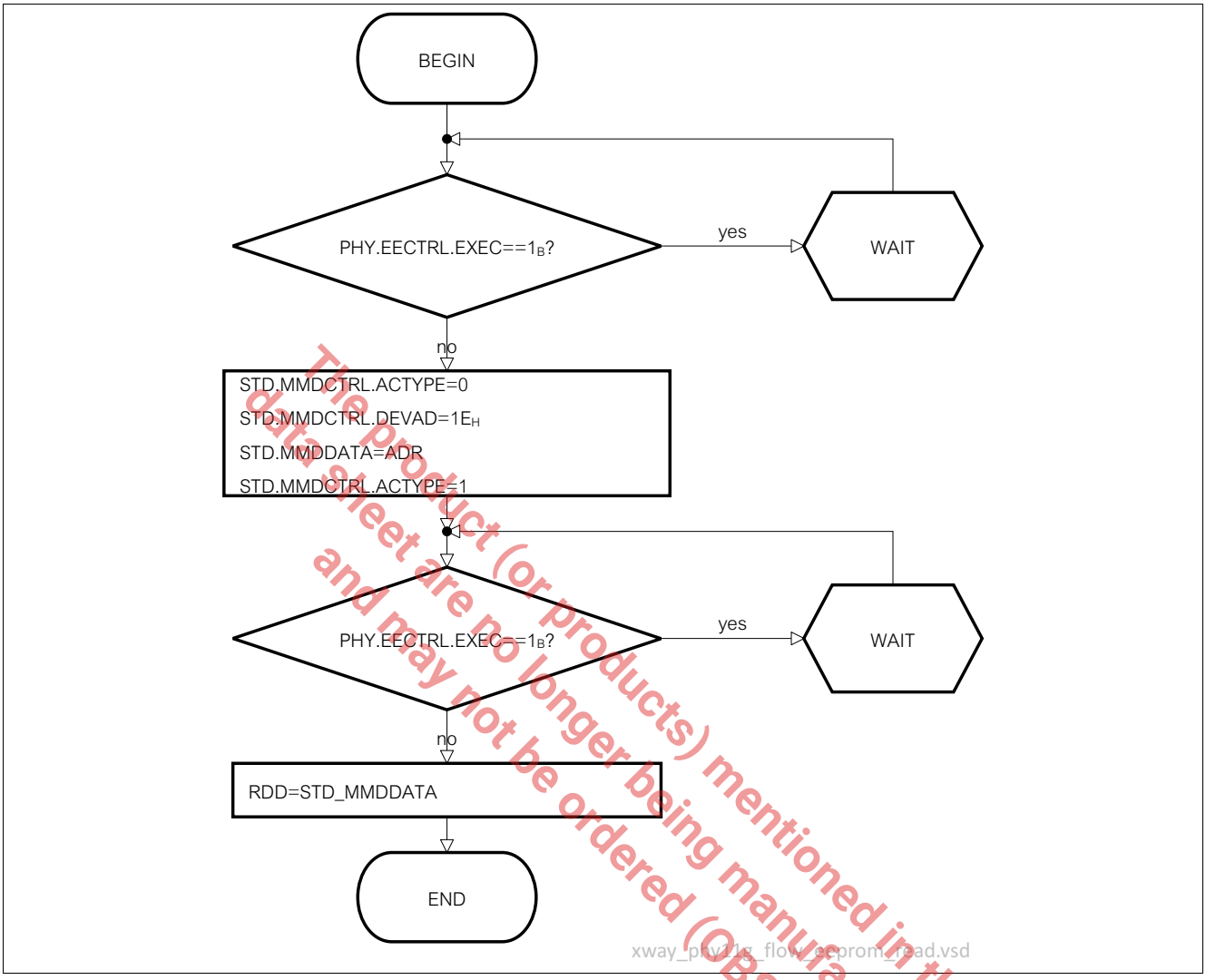

Figure 21 Flow-Chart for an Indirect EEPROM Read Cycle Via MDIO-MMD Access

The product (or products) mentioned in this data sheet are no longer being manufactured and may not be ordered (OBS)

3.4.3 Configuration and Control Via MDIO

If a higher-level management entity exists in the system, this can configure and control the GPY112 completely by means of the MDIO interface, according to IEEE 802.3 [1].

3.4.3.1 MDIO Interface

The GPY112 supports an MDIO interface according to IEEE 802.3 [1], giving a higher-level management entity control over internal functions. This control is provided by means of MDIO registers. The GPY112 provides the set of IEEE standard registers according to [1]. Additionally, extended register pages are supported. All registers are described in Chapter 4.

The MDIO interface is a serial interface using only 2 pins, which are named MDC and MDIO. See Chapter 2.2.5 for more information. The clock pin (MDC) is always driven by the higher-level management entity. The bi-directional signal (MDIO) carries the control information and is driven by both the higher-level management entity and the PHY, depending on whether a write or a read operation is being executed.

The MDIO communication between the higher-level management entity and PHY is organized in frames that are defined by IEEE 802.3 [1]. Figure 22 and Figure 23 illustrate the write and read frames respectively.

Chapter 6.6.5 defines the AC characteristics of this interface.

The product (or products) mentioned in this data sheet are no longer being manufactured and may not be ordered (OBS)

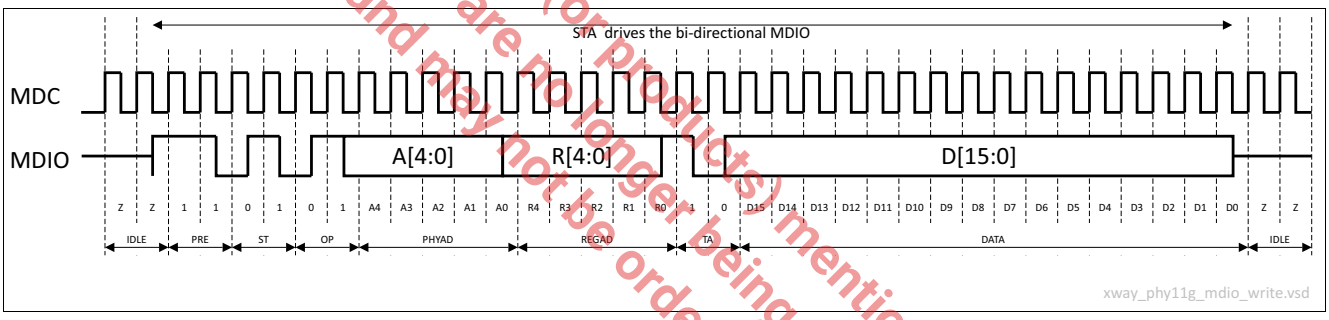

Figure 22 MDIO Write Frame

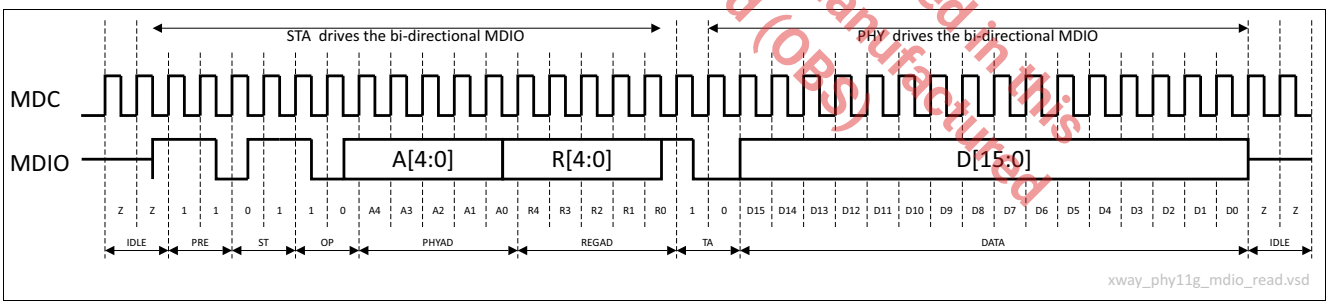

Figure 23 MDIO Read Frame

Note that the read operation requires the PHY to return the read data to the higher-level management entity. This implies that the driver of the MDIO signal is changed from being the higher-level management entity to being the PHY. In order to take this driving condition transition into account, a turn-around time is defined. The only period of time over which the PHY drives the MDIO signal is when returning the 16-bit read data value to the higher-level management entity.

Both frames consist of several fields which are explained in more detail in Table 25.

Table 25 Definition of MDIO Frame Components

Field	Field Long Name	Definition
IDLE	Idle Time	This state is entered by both the higher-level management entity and PHY when no transaction happens. In this state, all tristate drivers are inactive. The internal pull-up resistor of the MDIO pin on the GPY112 pulls the MDIO signal to logic one.
PRE	Preamble	The preamble is defined as a sequence of logic ones. Since this field of the frame is optional, the GPY112 does not require a preamble to be inserted. If inserted it can be of arbitrary length.
ST	Start of Frame	The ST field is required to determine a new frame start by means of a two-bit logic $<01_B>$ pattern.
OP	Operation Code	The operation code field indicates a read or write operation to the PHY by means of a two-bit logic $<10_B>$ or $<01_B>$ pattern respectively.
PHYAD	Physical Layer Address	The physical layer address field is used by the higher-level management entity to select one out of a maximum of 32 PHY devices. Each PHY needs to have a priori knowledge about its address. **Chapter 3.4.1** describes how this address can be configured to an GPY112 device.
REGAD	Register Address	This field represents a vector of five bits which define the register address for one out of 32 registers in the MDIO address space. In the GPY112, this address space covers the standard IEEE 802.3 **[1]** registers plus extended and custom registers. **Chapter 4** describes all register configurations.
TA	Turnaround	The turnaround is a two-bit time field that separates the DATA field from the others to avoid contention during read operations. During read transactions, the time duration of the first bit is used to ensure that both the higher-level management entity and the PHY disable their tristate drivers and that MDIO is in high impedance. The time duration of the second bit is used by the GPY112 to drive a logic zero.
DATA	Read/Write Data	The data field is 16 bits wide. The MSB is sent first and the LSB is sent last in both read and write transactions.

Attention: Consecutive MDIO accesses, especially if automated, are required to be spaced out in time to ensure that proper operation is maintained. It is recommended that the maximum rate of MDIO does not exceed 100 kHz.

The product(s) mentioned in this data sheet are no longer being manufactured and may not be ordered (OBS)

3.4.3.2 MDIO Address Space

Configuration and control operations, as well as extraction of status information, can be handled via the MDIO interface. This interface allows for registers located in the MDIO address space to be read from and written to. The MDIO interface can only address up to 32 addresses. The first 16 addresses (from 00_H to $0F_H$) are mostly defined by the IEEE 802.3 standard **[1]**, and cannot be used for device-specific configuration. Only the last 16 addresses (from 10_H to $1F_H$) are to be used. Since a range of 16 addresses is not sufficient to manage the GPY112, an indirect addressing scheme is used.

This scheme is depicted in **Figure 24**, which shows the layout of the MDIO address space looking from the higher-level management entity via the MDIO interface towards the PHY. As shown in the figure, the direct address region from 00_H to $0F_H$ holds all IEEE 802.3 standard **[1]** registers. The address range from 10_H to $1F_H$ spans an address range for PHY-specific registers that can be accessed directly via MDIO as well. The GPY112 address space is extended by means of an indirect memory access based on MMD registers. Note that this method is defined in

the IEEE 802.3 standard [1], in clause 22 and Annex 22D. It is used to access EEE registers as well as provide seamless access to a potentially externally-connected EEPROM and to all GPY112 internal registers. Note that access to internal registers is prohibited, except for the special addresses defined in Chapter 5.

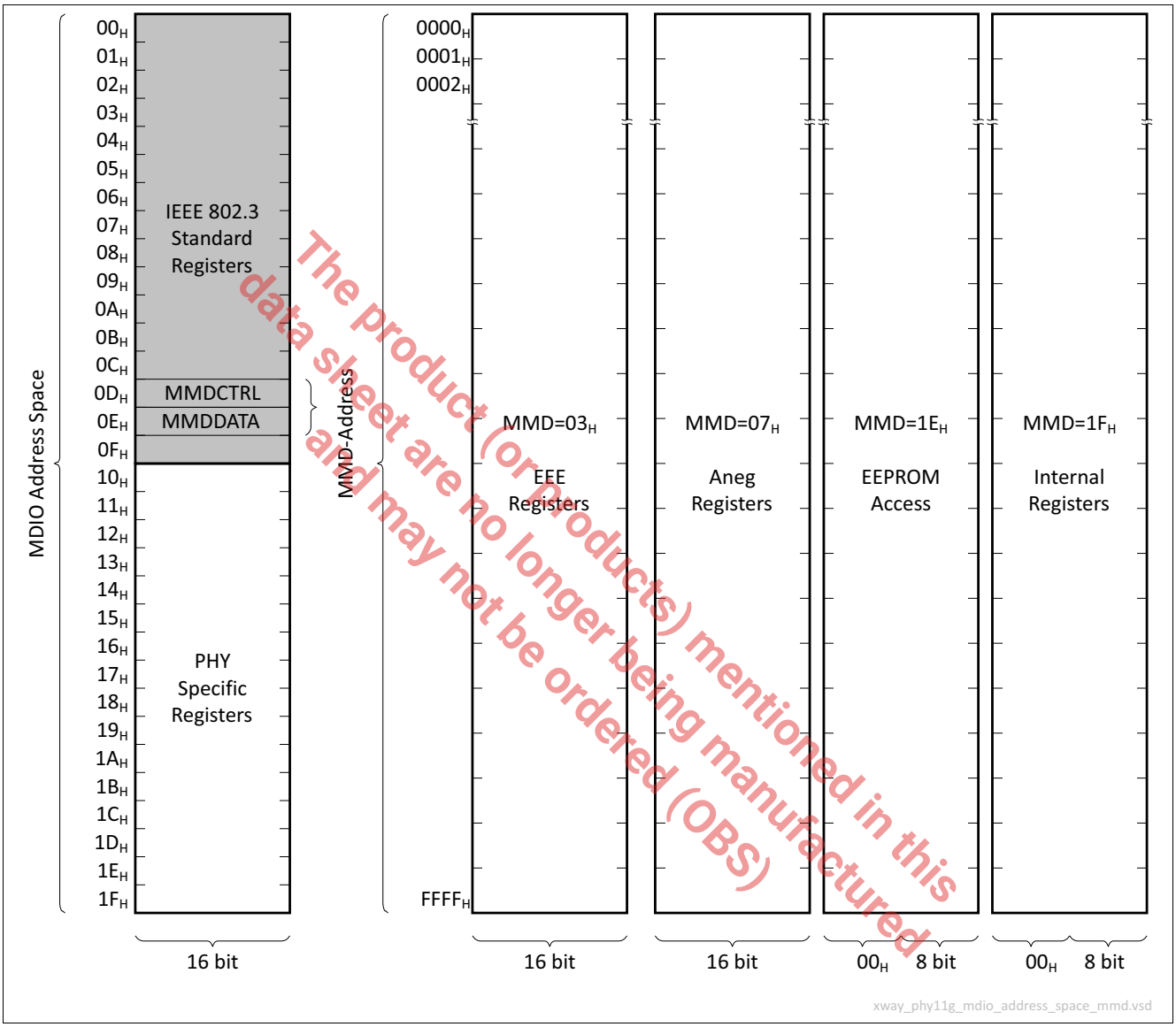

The product (or Products) mentioned in this data sheet are no longer being manufactured and may not be ordered (OBS)

Figure 24 Layout of the MDIO Address Space

In order to simplify the software design, the most frequently used status and control registers are placed directly in the MDIO address range using the PHY-specific registers. Part of the functionality, for example EEE, is located in the MMD address range by standard definition. Some PHY-specific registers are located in the user-defined MMD addresses $1E_H$ and $1F_H$. An overview of all pages is listed in Table 26.

Table 26 MDIO Indirect MMD Device Address Overview

MMD	MMD Name	Description
00_H-02_H	Unused	
03_H	**EEE**	Contains some standard registers required for EEE operation
04_H-06_H	Unused	
07_H	**ANEG**	Contains some standard registers required for EEE auto-negotiation operation
04_H-06_H	Unused	
$1E_H$	**EEPROM**	Allows seamless indirect access to externally connected (if present) EEPROM
$1F_H$	**Internal**	Allows seamless indirect access to PHY internal registers

3.4.3.3 MDIO Interrupt

The GPY112 allows for an interrupt to be driven to the management device. This interrupt is named MDINT, and can be used by the management device to get notification of pre-configured events. These events can be configured in the MDIO register `MDIO.PHY.IMASK` (**PHY_IMASK**), which allows for a mask to be set onto the event vector that can cause the MDIO interrupt to be asserted. The actual interrupt status is reported in the MDIO register `MDIO.PHY.ISTAT` (**PHY_ISTAT**). Note that, without any active mask bit in `MDIO.PHY.IMASK` (**PHY_IMASK**), the PHY will issue an interrupt after reset when it is ready to receive MDIO transfers.

Since there are many types of management devices, the interrupt polarity is not standardized. In order to be flexible and inter-operable with all types of management device IC, the MDINT pin of the GPY112 is in tristate when inactive. The active level of the MDINT pin can be customized by means of an external pull-up or pull-down resistor. If the MDINT polarity is active high, an external pull-down resistor must be connected to ground. Otherwise, if the MDINT polarity is active low, an external pull-up resistor must be connected to VDDP. After reset of the GPY112, the MDINT is tristated by default. During this time period, the GPY112 detects the target polarity of the MDINT by reading out the pull-up/down resistor. The external circuitry for the MDINT pin in an active-high and active-low state is depicted in **Figure 25** and **Figure 26** respectively.

The product(s) mentioned in this data sheet are no longer being manufactured and may not be ordered (OBS)

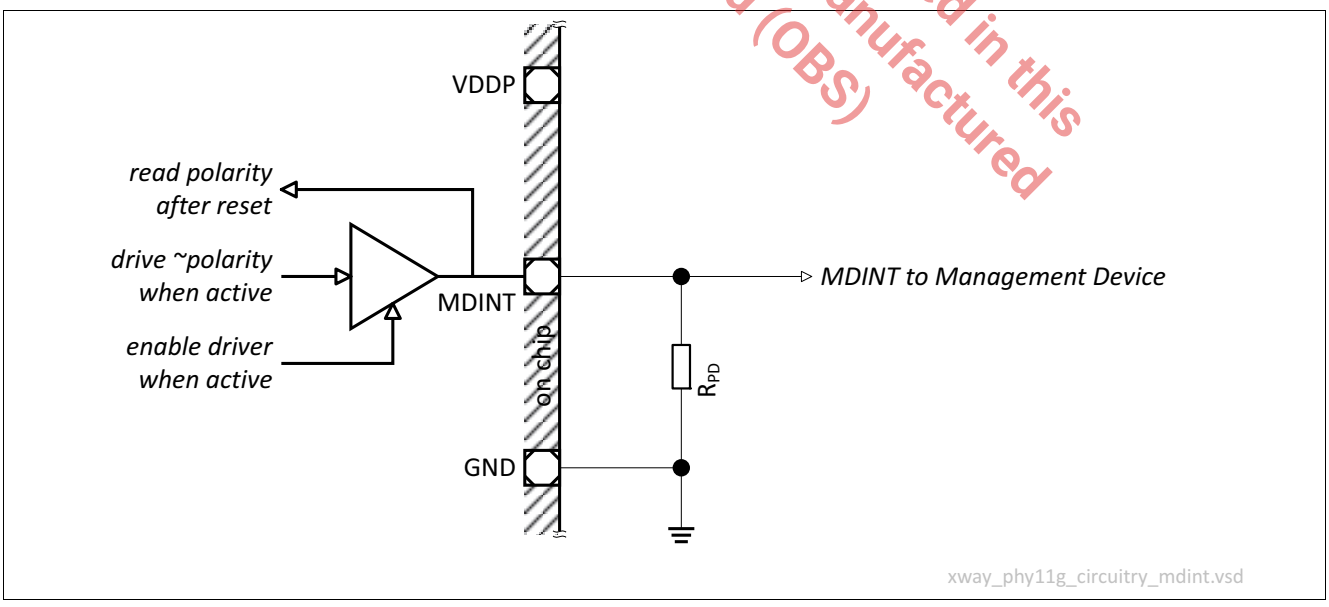

Figure 25 External Circuitry for an Active-High MDINT

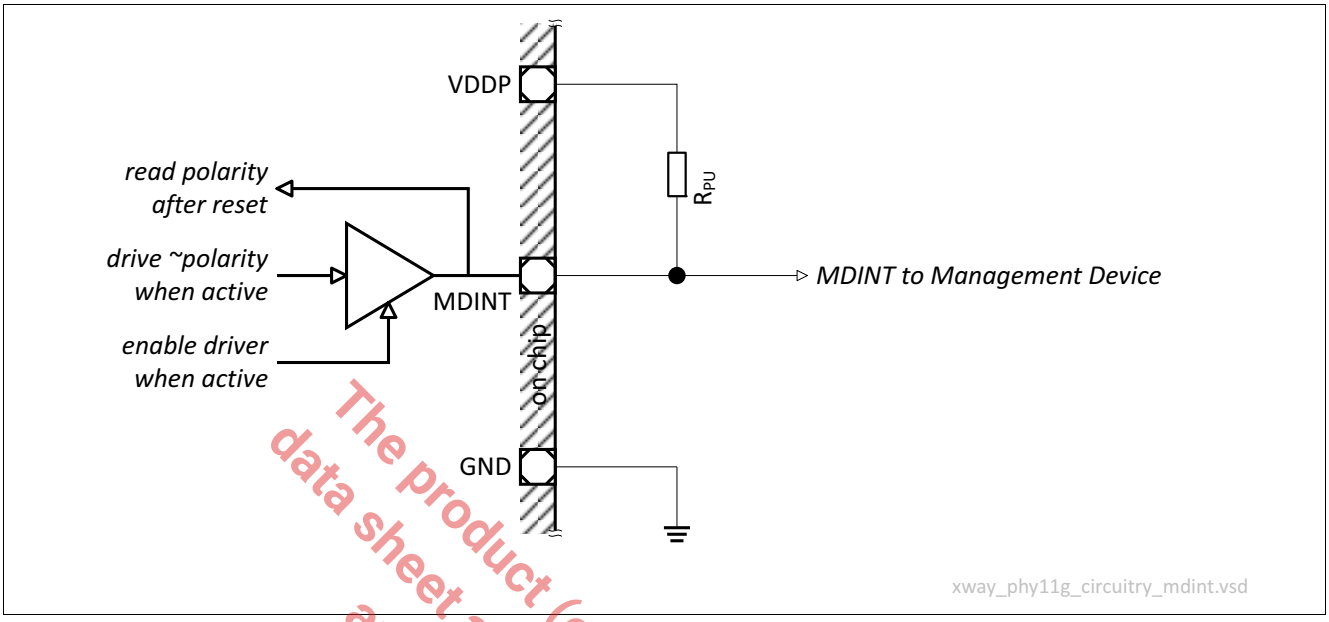

Figure 26 External Circuitry for an Active-Low MDINT

The product (or products) mentioned in this data sheet are no longer being manufactured and may not be ordered (OBS)

3.4.4 LED Interface

The GPY112 supports up to four LED outputs. These outputs are active high and drive LEDs directly with V_{DDP} = 2.5 V...3.3 V (see **Chapter 6.2**). It is possible to connect one single-color LED per interface pin, as well as bi-color LEDs. The latter is achieved by combining two LED interface pins. Both modes of operation are introduced in **Chapter 3.4.4.1** and **Chapter 3.4.4.2** respectively. The behavior and event-sensitivity of each LED can be configured individually, as described in **Chapter 3.4.4.3**. The individual MDIO registers referred to in **Chapter 3.4.4.3** are described in more detail in **Chapter 4**.

3.4.4.1 Single Color LED Mode

The external circuitry for a single-color LED is depicted in **Figure 27**. The LEDx pin represents one of the available LED interface pins at the device. The GND signal represents the common ground EPAD. The LED pins are designed to source a certain amount of current out of the pad-supply V_{DDP} when becoming active high. Besides the LED, two individual resistors are depicted in the figure. R_{LED} denotes an optional series resistor which could be used depending on the selected LED type and PAD supply voltage V_{DDP}. R_{CFGx} and C_{CFGx} denote external passive components required for the soft pin-strapping configuration of the device. The component values are selected such that the brightness of the LED is not affected. More details on this type of pin-strapping configuration can be found in **Chapter 3.4.1**.

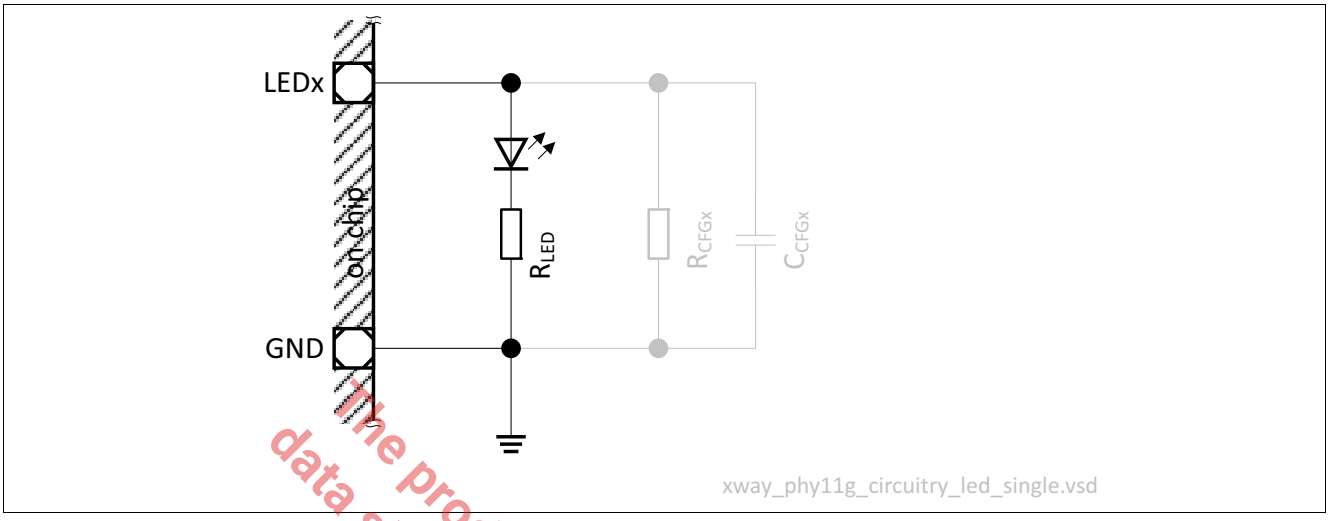

Figure 27 Single Color LED External Circuitry

3.4.4.2 Bi-Color LED Mode

The external circuitry for a bi-color LED is depicted in **Figure 28**. The LEDx and LEDy pins represent any two of the available LED interface pins at the device. The GND signal represents the common ground EPAD. The LEDx and LEDy pins are designed to source a certain amount of current out of the pad-supply V_{DDP} when becoming active high. Besides the LEDs[1)], three individual resistors are depicted in the figure. R_{LED} denotes an optional series resistor which might be used, depending on the selected LED type and PAD supply voltage V_{DDP}. R_{CFGx}/R_{CFGy} and C_{CFGx}/C_{CFGy} denote external passive components required for the soft pin-strapping configuration of the device. The component values are selected such that the brightness of the LED is not affected. More details on this type of pin-strapping configuration can be found in **Chapter 3.4.1**.

The product (or products) mentioned in this data sheet are no longer being manufactured and may not be ordered (OBS)

1) Bi-color LEDs are also available as monolithic 2-pin devices as indicated in **Figure 28**.

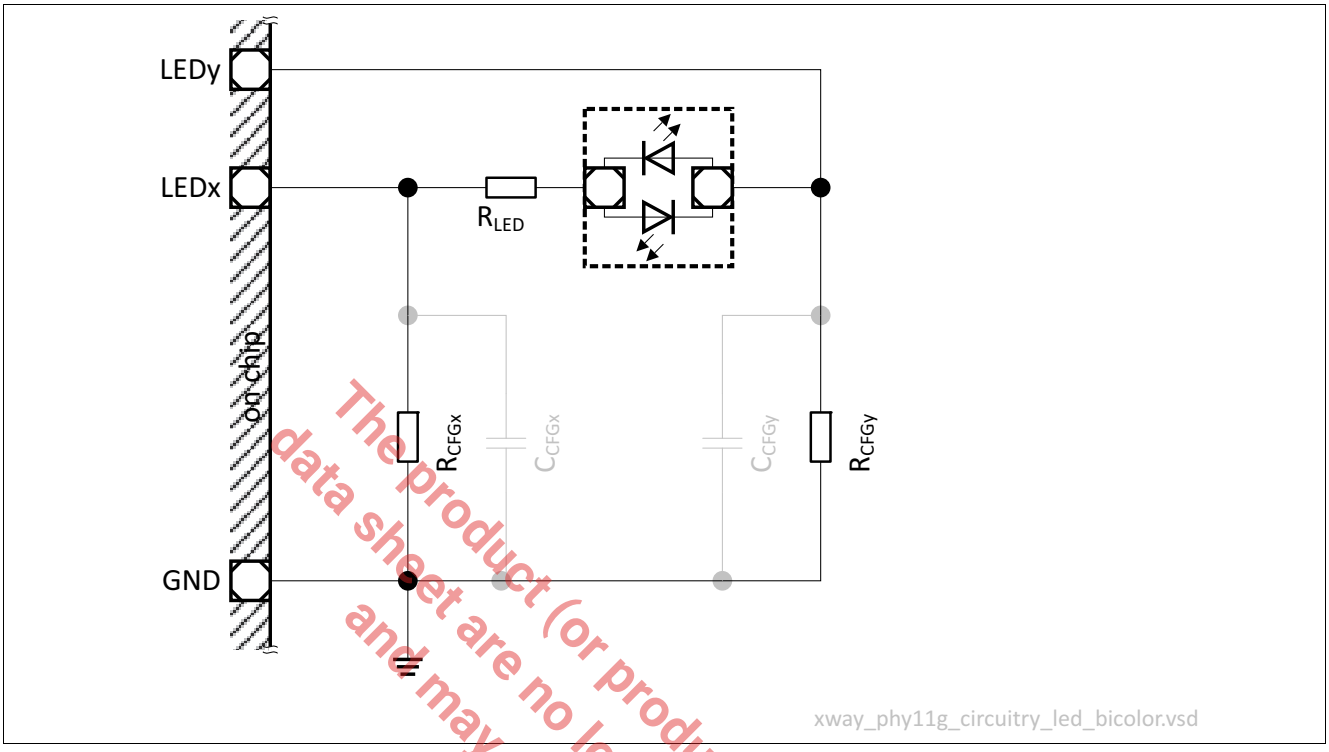

Figure 28 Bi-Color LED External Circuitry

The product (or products) mentioned in this data sheet are no longer being manufactured and may not be ordered (OBS)

3.4.4.3 LED Operations

Irrespective of the LED type used (single-color or bi-color), the LED pins can be operated in various modes. Basically, two major modes can be distinguished: Internally Controlled Mode (ICM) and Externally Controlled Mode (ECM). In ECM, the higher-level management entity is able to control the LEDs via register access in the MDIO register space. In ICM, the GPY112 itself controls the functions of the LEDs. These functions are introduced in **Chapter 3.4.4.3.2**, and can be configured by the higher-level management entity via MDIO configuration registers as described in **Chapter 3.4.4.3.3**. The configuration scheme is defined such that combined and direct-drive LED functionality can be set up.

3.4.4.3.1 LED Externally Controlled Mode (ECM)

In ECM, the LEDs can be directly driven by register bits mapped onto the MDIO address space. The higher-level management entity is able to directly change the LED outputs. This feature enables the higher-level management entity to control the LED pins itself, and the GPY112 only acts as the LED driver. This mode also acts as a simple testing feature for the LEDs. Note that ECM is not enabled by default, and needs to be enabled in advance. To enable the ECM, the higher-level management entity needs to set the register `MDIO.PHY.LED.LED[3:0]EN` = 0_B.

The LED can be illuminated by setting `MDIO.PHY.LED.LED[3:0]DA` = 1_B.

3.4.4.3.2 LED Functions in Internally Controlled Mode (ICM)

LED functions are activities to be applied to the LED pins according to a given configuration. These activities are applied in a given priority. It is possible to map multiple activities to the same LED pin, in order to be able to multiplex different types information. The configuration of these LED functions is described in **Chapter 3.4.4.3.3**. There are two types of LED function: direct and complex LED functions. Direct LED functions can be applied to a single LED, whereas complex LED functions use the context of all LEDs. **Table 27** lists all the supported direct LED functions and their associated priorities when compared with each other. **Table 28** lists all the supported

complex LED functions and their priorities when compared to each other. The complex LED functions have a higher priority than that of the direct LED functions.

Table 27 Direct LED Functions

Function	Priority	Description
PULSE	1 (high)	The LED is switched on/off shortly in reaction to a certain event or state transition. The corresponding ON and OFF time is determined by the pulse-stretching[1)] configuration. Note that each new event will cause an ON-OFF sequence unless if this event happens during a running PULSE function. The ON-OFF sequence is necessary to make the PULSE function visible on LEDs which already indicate another function, e.g. ON or BLINK slow. The length of the pulse stretching depends on the global setting used for the fast-blinking frequency.
BLINKF	2	LED blinks with a globally configured fast frequency.
BLINKS	3	LED blinks with a globally configured slow frequency.
CON	4	LED is constantly ON; can be configured to indicate link speed, EEE mode, ANEG, analog self-test / cable diagnostics, or the currently active interface (copper, fiber or other)
NONE	5 (low)	No direct function is applied to the LED; the LED is OFF (might be over-ruled by a concurrently running complex function).

1) Pulse-stretching is used to make short events visible by extending the lighting time of the LED following this event.

Table 28 Complex LED Functions

Function	Priority	Description
CBLINK	1 (high)	All LEDs blink simultaneously with the globally configured fast frequency. In particular, in order to distinguish this mode properly from concurrently running direct functions, all even-numbered LEDs have their blinking phase shifted by 180° with respect to the odd-numbered LEDs.
SCAN	2	Scan sequence; this is a walking light running fast between LED0 to LED3 backwards and forwards. The speed is selected for the fast-blink frequency.
NACS	3	Reversed scan sequence; similar to the SCAN function but all LED outputs are inverted.
NONE	4 (low)	No complex function is applied to the LEDs.

The speed or frequency of any of the BLINK or SCAN/ISCAN LED functions can be selected by means of a global setting in the `MMD.INTERNAL.LEDCH.FBF` register (fast-blinking frequency) as well as in the `MMD.INTERNAL.LEDCH.SBF` register (slow-blinking frequency). Refer to **LED Configuration** for more information.

3.4.4.3.3 LED Configuration in ICM

The configuration of LEDs for ICM can be managed with the LED configuration registers. Apart from the complex function registers `MMD.INTERNAL.LEDCH` and `MMD.INTERNAL.LEDCL`, there is one such register for each LED port: registers `MMD.INTERNAL.LED0H` / `MMD.INTERNAL.LED0L` through `MMD.INTERNAL.LED3H` / `MMD.INTERNAL.LED3L`. The layout of this type of configuration register is defined in **Chapter 4**. Each supported direct function owns a field in these LED-specific configuration registers. The setup of the direct functions is independent for each LED. The fields of the `MMD.INTERNAL.LEDxx` register allow several states/events of the GPY112 to be mapped to the supported direct functions. If a direct function is not desired, a NONE must be

The Product (or products) mentioned in this data sheet are no longer being manufactured and may not be ordered (OBS)

mapped. Note that multiple events/states can occur simultaneously. The direct functions apply according to the priority as specified in **Table 27**. Also note that a direct function always has a lower priority than any supported complex function.

As an example the following mapping can be configured for LED0, LED1 and LED2:

- LED0:
  - PULSE = NONE
  - BLINKS = LINK10
  - BLINKF = LINK100
  - CON = LINK1000
- LED1
  - PULSE = ACTIVITY (TXACT | RXACT)
  - BLINKS = NONE
  - BLINKF = NONE
  - CON = NONE
- LED2
  - PULSE = COL
  - BLINKS = NONE
  - BLINKF = NONE
  - CON = NONE

In this example, the LED0 indicates the speed of the PHY, whereas LED1 indicates the transmit and receive activity. LED2 reflects any collision in case of half-duplex mode settings.

If any supported complex function (CBLINK, SCAN, NACS) is desired in cable diagnostics mode, this can be set up using the registers `MMD.INTERNAL.LEDCL.{CBLINK, SCAN}` and `MMD.INTERNAL.LEDCH.{NACS}`.

The product (or product(s) mentioned in this data sheet are no longer being manufactured and may not be ordered (OBS)

3.5 Power Management

This chapter introduces the power management and power supply functions of the GPY112.

3.5.1 Power Supply

Because of its integrated DC/DC switching regulator, the GPY112 can be powered using a single power supply, as described in **Chapter 3.5.1.1**. However, the device can also be powered without the integrated DC/DC switching regulator, as described in **Chapter 3.5.1.2**.

If the integrated DC/DC switching regulator is used, then a clock signal is required at XTAL1 during both normal mode and boundary scan mode.

3.5.1.1 Power Supply Using Integrated Switching Regulator

By using the integrated DC/DC switching regulator, the GPY112 can be powered using a single power supply. This power supply can range from 2.5 V to 3.3 V. As long as the applied nominal voltage remains in this range, the device operates automatically and without the need for additional settings to be applied. Only minor external circuitry is required to enable this feature. An example schematic is shown in **Figure 29**. The electrical characteristics of the power supply are defined in **Chapter 6.2**.

The product (or products) mentioned in this data sheet are no longer being manufactured and may not be ordered (OBS)

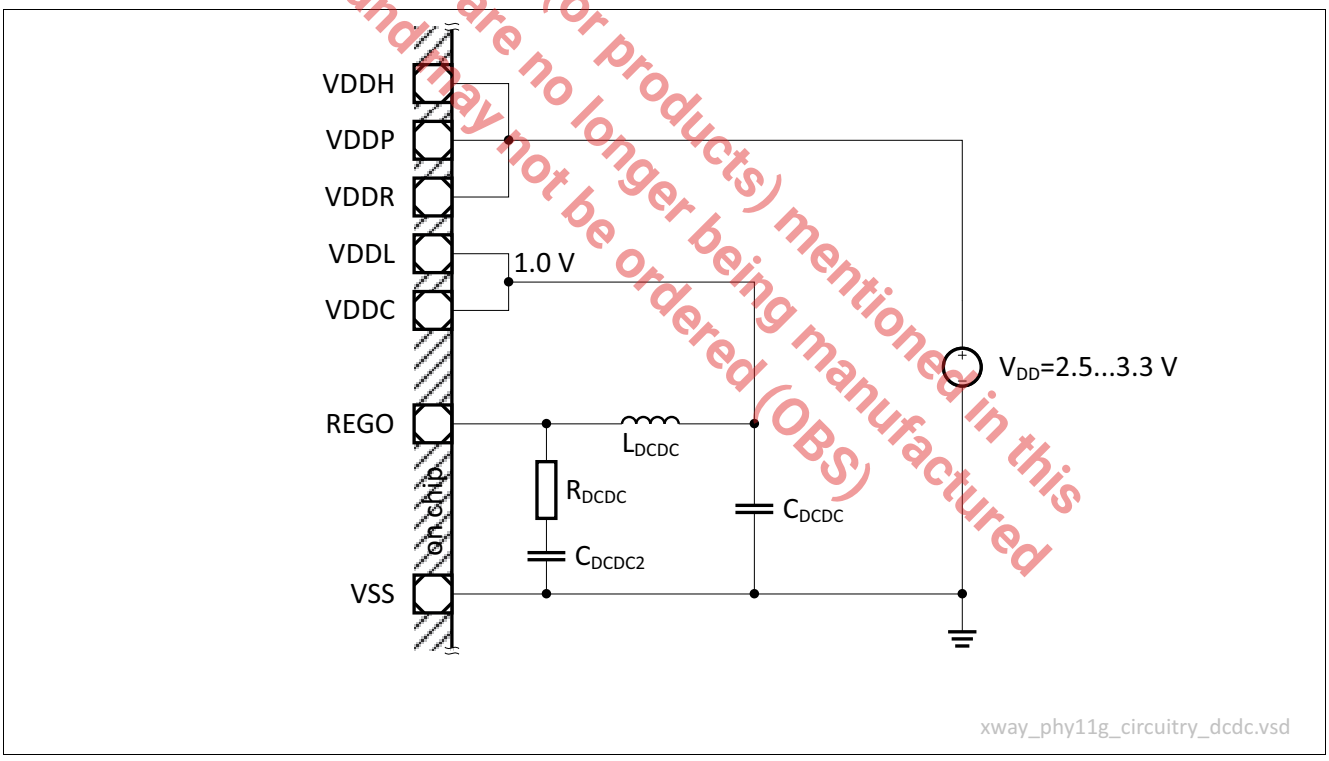

Figure 29 External Circuitry using the Integrated Switching Regulator

The required values for external components are listed in **Table 29**.

Table 29 Switching Regulator External Component Values

Parameter	Symbol	Values			Unit	Note / Test Condition
		Min.	Typ.	Max.		
DC/DC buck inductance	L_{DCDC}		4.7		µH	I_{max} = 450 mA
DC/DC smoothing capacitance	C_{DCDC}		22.0		µF	
DC/DC spike filter resistance	R_{DCDC}		5.0		Ω	
DC/DC spike filter capacitance	C_{DCDC2}		333.0		pF	

3.5.1.2 Power Supply Without Using Integrated Switching Regulator

When the integrated DC/DC switching regulator is not used, for example when both power supply voltages are already available in the system, the GPY112 can be powered by a dual power supply, as shown in **Figure 30**. The electrical characteristics of the power supply are defined in **Chapter 6.2**.

The Product (or products) mentioned in this data sheet are no longer being manufactured and may not be ordered (OBS)

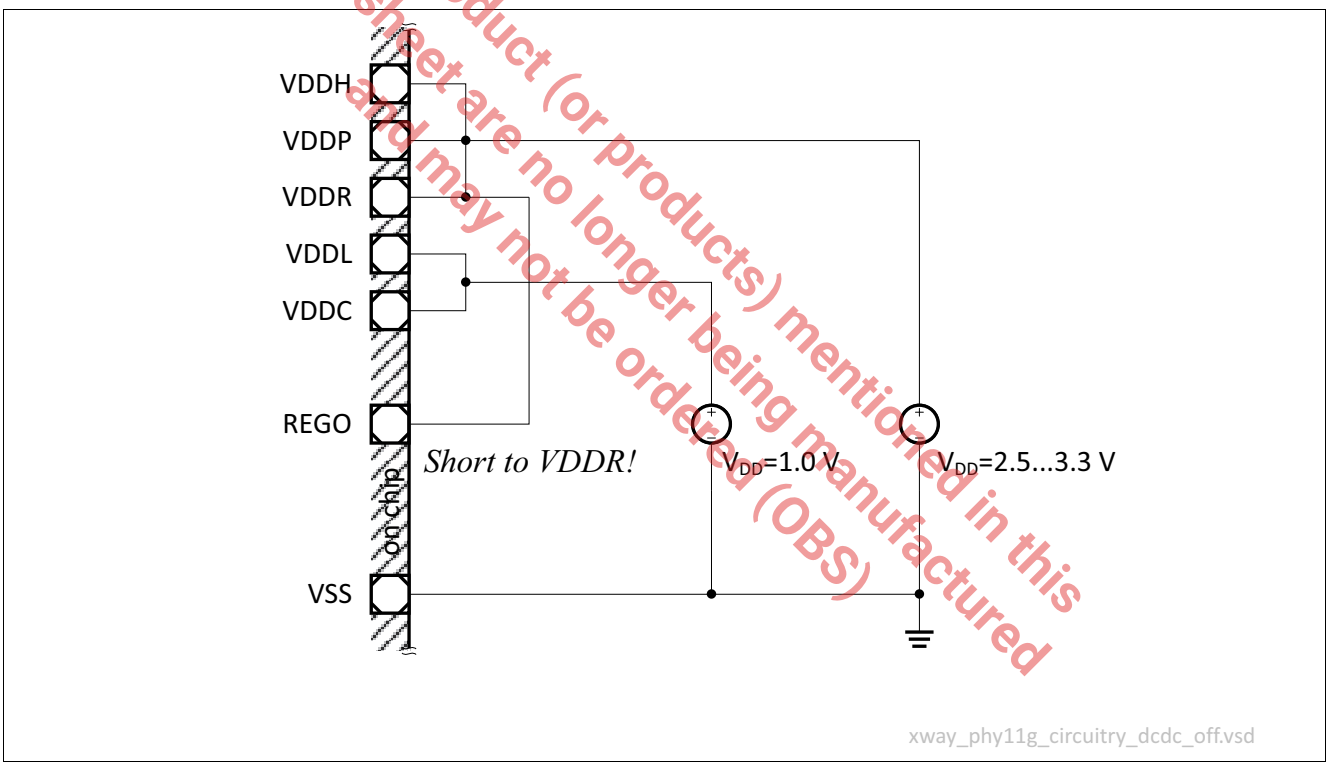

Figure 30 External Circuitry without using the Integrated Switching Regulator

In external supply mode, the integrated DC/DC is internally switched off, as the GPY112 automatically detects whenever the switching regulator output pin is shorted to VDDR. In this case, neither additional pin-strappings nor register settings are required. Note that **Figure 30** is only a generic schematic, and does not show power supply blocking for reasons of simplicity.

3.5.2 Power Over Ethernet (PoE)

Power Over Ethernet (PoE) is a standardized method (described in IEEE 802.3af, and in particular in IEEE 802.3, clause 33 [1]) for remotely powering devices via the MDI. The remotely powered device does not require a power supply, thereby mainly saving on installation costs, since only the Ethernet connection (CAT5 cable or better) needs to be equipped. One example of such an application is for Wi-Fi routers or NAS devices. According to the standard, such devices can be remotely powered if they consume less than 15.4 W. As there is a strong demand for higher-power applications, an enhancement of the PoE standard is being developed (IEEE 802.3at, [3]) that is able to provide up to 50 W via remote powering. The increase in power level is practically the only difference between the two standard versions.

The IEEE 802.3af standard defines two kinds of devices, the Powered Device (PD) and the Power-Sourcing Equipment (PSE). The former extracts electrical power from the common mode of some of the twisted pairs inside the CAT5 (or better) cable, whereas the latter acts as a source of electrical power. The two types of devices and their application together with the GPY112 are illustrated in Chapter 3.5.2.1 and Chapter 3.5.2.2, respectively.

The product(or products) mentioned in this datasheet are no longer being manufactured and may not be ordered (OBS)

3.5.2.1 Powered Device (PD)

Additional external circuitry is required to extract power from the twisted pair. This includes a PD circuit and a DC/DC converter, together with various external components that are usually not integrated. The PD and DC/DC devices could be integrated on one IC.

According to IEEE 802.3, clause 33 [1], there are two alternative methods for supplying a PD. The first involves supplying power via the common mode of the pairs (1, 2) and (3, 6), whereas the second involves the pairs (4, 5) and (6, 7). The PD is required to accept power from both alternatives, but only one in parallel. The polarity of the power injection is not specified. Accordingly, each PD must have a diode-bridge rectifier to extract the power from both twisted-pair combinations alternatively but independent of the driver polarity.

In turn, the PD must signal to the PSE which type of power is required, as several power classes are defined. More details can be found in IEEE 802.3, clause 33. This signaling is done by means of a resistive value which is sensed by the PSE. Each PD IC provides a pin to which this classification resistor can be connected. After the initial classification, done by the PSE with low voltages to prevent damage of non PoE-compliant PDs, the PSE drives the required power to the line. The PD indicates the availability of power to the DC/DC converter by means of the Pgood (power good) signal. The DC/DC converter is required to transform the line voltage (>20 V) to the chip power supply voltages required by the system. Since the DC/DC can only start once the power is stable, the Pgood indication is usually a necessary requirement. Note that the DC/DC converter must implement soft-start functionality to prevent the start current from becoming exhaustively large. Once the DC/DC provides the nominal voltage to the system, the remotely powered devices (ICs) power up just as they would if a power source is applied in normal operating conditions.

The board voltage provided by the DC/DC of the PD is fed to the GPY112 to supply the 2.5 V/3.3 V voltage domain, and in particular VDDP, VDDH and VDDR. All these domains must be properly blocked with adequate capacitance and filtering techniques. The integrated DC/DC switching regulator (see also Chapter 3.5.1.1) of the GPY112 can in turn be used to supply the 1.0 V voltage domains, for example VDDL, VDDC and VDDL. Note that the integrated DC/DC switching regulator supports soft-starting such that PoE is enabled.

The power class advertised by the PD to the PSE depends largely on the power consumption of the whole system. The GPY112 itself must also be taken into account. Regardless of the current power consumption of the GPY112, it is recommended that a figure of 1 W is assigned to the PHY.

3.5.2.2 Power Sourcing Equipment (PSE)

The generic PSE circuit is similar to that of the PD, except that the PSE must only inject the supply into one of the two twisted-pair alternatives: pairs (1, 2) and (3, 6) or (4, 5) and (6, 7). The PSE also does not require polarity invariance measures, since it defines the supply polarity. However, the PSE must be supplied properly to guarantee proper operation, regardless of which type of PD is connected. Otherwise, the PSE has to switch itself off if it detects a PD of too high a power class.

There are 2 types of PSE system: EndPoint and Mid-Span. The GPY112 can be used in either type of system.

Note that the PSE adds complexity to the design, because of the high-voltage supply of the PoE. Typically, 48 V are used to supply the remote PD. It is recommended to avoid cross-connecting any of the PSE signals with any of the GPY112 signals, unless these are galvanically de-coupled. This applies to the common-mode supply injection at the center taps of the transformers, which is only done on the line side of the transformer. Some PSE devices support an I^2C interface for management interaction. This interface can only be connected to the GPY112 when using an opto-coupler.

3.5.3 Energy-Efficient Ethernet

The IEEE 802.3az standard ([2]), describing Energy-Efficient Ethernet (EEE) operation, is also implemented in the GPY112. Since the method used for saving energy depends on the PHY speed, this section is divided into 3 subsections corresponding to the various speeds of 10BASE-Te, 100BASE-TX and 1000BASE-T. Except for 10BASE-Te, the general idea of EEE is to save power during periods of low link utilization. Instead of sending an active idle, the transmitters are switched off for a short period of time (20 ms). The link is kept active by means of a frequent refresh cycle initiated by the PHY itself during low power mode. This sequence is repeated until a wake request is generated by one of the link-partners MACs. An EEE-compliant MAC must grant the PHY a time budget of wake time before the first packet is transmitted. The basic principle is shown in Figure 31.

The product (or products) mentioned in this data sheet are no longer being manufactured and may not be ordered (OBS)

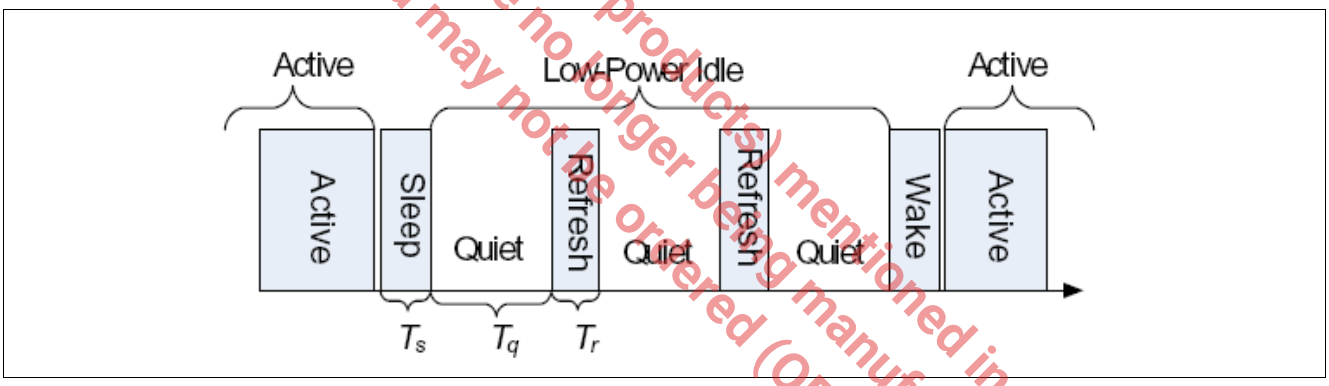

Figure 31 EEE Low-Power Idle Sequence

3.5.3.1 EEE for 10BASE-Te

10BASE-Te is a fully inter-operable version of the legacy 10BASE-T. It is optimized for CAT5 and better cabling infrastructure. Since these cables have better insertion loss properties, the amplitude of 10BASE-T can be reduced, thus saving on energy.

Specifically, the 10BASE-Te transmission amplitude has been reduced to the range of 1.54 V...1.92 V, instead of 2.2 V...2.8 V for 10BASE-T. The 10BASE-Te mode can be activated using the `MDIO.PHY.PHYCTL1.TXEEE10` bit. In order to maintain maximal inter-operability, the GPY112 detects links with marginal characteristics and automatically switches back to the 10BASE-T mode. Thus, the legacy performance requirements are also supported, even though the transmitter is set up for 10BASE-Te.

3.5.3.2 EEE for 100BASE-TX

During periods of low link utilization, an EEE-compliant MAC can assert Low Power Idle (LPI). It does so by asserting TX_EN = 0_B, TX_ER = 1_B and TXD = 0001_B at the MII or an equivalent interface. The GPY112 initiates LPI signaling and enters a low-power mode. Similarly, the GPY112 senses LPI signaling on its receive side and switches off the receive path. Any wake attempt will cause the GPY112 to return to the normal mode of operation in transmit or receive. Note that the GPY112 indicates a receive LPI by asserting RX_DV = 0_B, RX_ER = 1_B and RXD = 0001_B at the MII or equivalent interface. The wake-time for 100BASE-TX is of 20.5 µs.

3.5.3.3 EEE for 1000BASE-T

During periods of low link utilization, an EEE-compliant MAC can assert Low Power Idle (LPI). It does so by asserting TX_EN = 0_B, TX_ER = 1_B and TXD = 01_H at the Gigabit MII or an equivalent interface. In 1000BASE-T LPI mode, the transmit function of the GPY112 enters a quiet mode only after the GPY112 transmits “sleep” and receives “sleep” from the link partner. If the link partner chooses not to signal LPI, then the PHY can also not become quiet. However, LPI requests are passed from one end of the link to the other regardlessly, and system energy savings can be achieved even if the PHY link does not become quiet. The 1000BASE-T LPI is symmetric on the PHY layer but remains asymmetric (transmit and receive independently) at xMII level and above. Note that the GPY112 indicates a receive LPI by asserting RX_DV = 0_B, RX_ER = 1_B and RXD = 01_H at the GMII or an equivalent interface. The wake-time for 1000BASE-T is of 30 µs.

3.5.3.4 Auto-Negotiation for EEE Modes

It is imperative that EEE capability is advertised, since, except for 10BASE-Te, a compliant link partner is required. Similarly to 1000BASE-T auto-negotiation, the GPY112 automatically advertises EEE capability if this is enabled using next pages. EEE capability is stored in the `MMD.ANEG.EEE_AN_ADV` registers (refer to **EEE Auto-Negotiation Advertisement Register**). Setting this register to zero disables EEE. After a successful negotiation the link partners’ capabilities are stored in the `MMD.ANEG.EEE_AN_LPADV` register (refer to **EEE Auto-Negotiation Link-Partner Advertisement Register**). After a successful auto-negotiation, the GPY112 performs an auto-resolution on the exchanged capabilities. The result is combined with the speed resolution. Whether or not a link is able to operate EEE is reported in the `MDIO.PHY.MIISTAT.EEE` register (refer to **Media-Independent Interface Status**).

The Product (or products) mentioned in this data sheet are no longer being manufactured and may not be ordered (OBS)

3.5.4 Wake-on-LAN (WoL)

Wake-on-LAN (WoL) is an essential feature of the GPY112. By means of an integrated packet trace engine that is capable of monitoring and detecting WoL packets, the PHY is able to wake a larger SoC from its power-down state. This is done by indicating such an event via the external interrupt sourced by the GPY112. This scenario is shown in **Figure 32**. Consequently, the SoC can switch GPY112off everything except the interrupt controller, in order to save the maximum amount of power. The GPY112 can trace WoL packets in any of its supported speed modes:10/100/1000 Mbit/s. Since WoL is a standby system feature, it can happen that the residual power consumption of the GPY112 is critical. Therefore, it is recommended to put the PHY into a lower power state, for example 10BASE-T or 100BASE-T, before the SoC enters its power-down state. If the link supports EEE (see also **Chapter 3.5.3**), this is not required since the PHY can be put into low-power mode by means of an LPI assert signal. Once a WoL packet is detected, the GPY112 issues a wake-up indication to the SoC by activating the MDINT signal (see also **Chapter 3.4.3.3**).

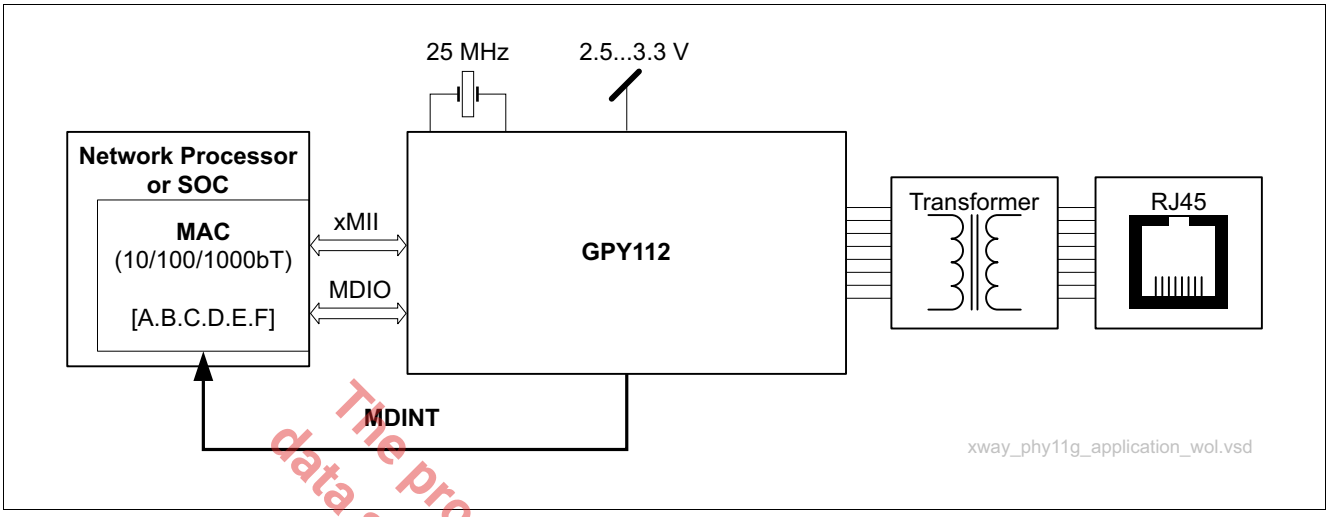

Figure 32 Block Diagram of a WoL Application

The product (or products) mentioned in this data sheet are no longer being manufactured and may not be ordered (OBS)

The most commonly used WoL packet is a magic packet [14]. A magic packet is a deterministic packet that contains the MAC address of the device that is to be woken up. A magic packet can be encapsulated into any type of higher-layer protocol, for example TPC/IP or UDP. Regardless of the higher-layer protocol used, the setup of the core magic packet is always the same.

The format of a magic packet is shown in Figure 33 for an example with a MAC address of $AA_H.BB_H.CC_H.DD_H.EE_H.FF_H$ and an optional password of $00_H.11_H.22_H.33_H.44_H.55_H$. The example magic packet is shown encapsulated in the content of a conventional Ethernet MAC frame structure. The magic packet itself contains of a header which is a sequence of 6 consecutive FF_H Bytes. Following this header is a repetition for 16 times of the target MAC address of the device to be woken up. Note that this address can also be any standard broadcast address. An optional field containing a 6 Byte wake-up password follows. The GPY112 scans for this password if it is configured. Otherwise, this field is ignored.

The GPY112 is a pure PHY and does not include a MAC or have a MAC address. The SoC must configure its own MAC address, for example $AA_H.BB_H.CC_H.DD_H.EE_H.FF_H$, into the WoL packet monitoring engine of the GPY112, using the MDIO interface. The same applies in case the optional password is intended to be used.

The configuration of the MAC address and the optional SecureOn password relevant for the WoL logic inside the GPY112 is performed via MDIO registers. For the given example, programming is done according to the steps illustrated in Table 30. Note that, by definition, a SecureOn password of $00_H.00_H.00_H.00_H.00_H.00_H$ means that no SecureOn password is defined and therefore none is checked.

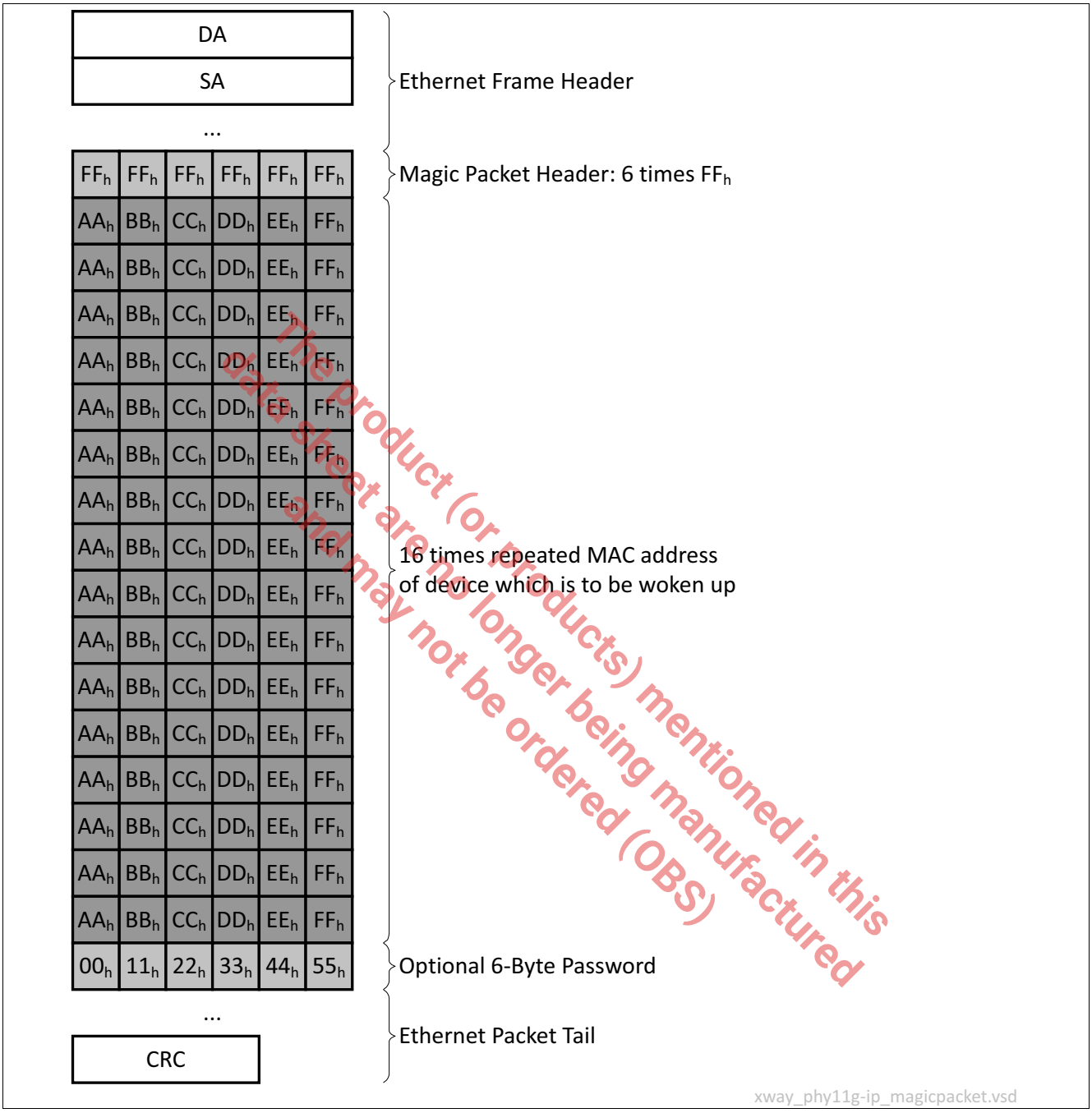

The product (or products) mentioned in this data sheet are no longer being manufactured and may not be ordered (OBS)

Figure 33 The Magic Packet Format

Table 30 Programming Sequence for the Wake-On-LAN Functionality

Step	Register Access	Remark
1	`MDIO.MMD.WOLAD0` = AA_H	Program the first MAC address byte
2	`MDIO.MMD.WOLAD1` = BB_H	Program the second MAC address byte
3	`MDIO.MMD.WOLAD2` = CC_H	Program the third MAC address byte
4	`MDIO.MMD.WOLAD3` = DD_H	Program the fourth MAC address byte
5	`MDIO.MMD.WOLAD4` = EE_H	Program the fifth MAC address byte
6	`MDIO.MMD.WOLAD5` = FF_H	Program the sixth MAC address byte

Table 30 Programming Sequence for the Wake-On-LAN Functionality (cont'd)

Step	Register Access	Remark
7	MDIO.MMD.WOLPW0 = 00_H	Program the first SecureON password byte
8	MDIO.MMD.WOLPW1 = 11_H	Program the second SecureON password byte
9	MDIO.MMD.WOLPW2 = 22_H	Program the third SecureON password byte
10	MDIO.MMD.WOLPW3 = 33_H	Program the fourth SecureON password byte
11	MDIO.MMD.WOLPW4 = 44_H	Program the fifth SecureON password byte
12	MDIO.MMD.WOLPW5 = 55_H	Program the sixth SecureON password byte
13	MDIO.PHY.IMASK.WOL = 1_B	Enable the Wake-On-LAN interrupt mask
14	MDIO.MMD.WOLCTRL.WOL.EN = 1_B	Enable Wake-On-LAN functionality

3.5.5 Power Down Modes

This section introduces the power-down modes that are supported by the GPY112. These modes can be associated to states as shown in Figure 34. The functionality of each mode and the state transitions are discussed in detail in the subsequent sections.

The higher level software can monitor the GPY112 and take measures to save power in case an Ethernet cable is not connected. More details will be provided in the upcoming GPY112 Power Saving Method application note [15], for reference.

The product (or products) mentioned in this data sheet are no longer being manufactured and may not be ordered (OBS)

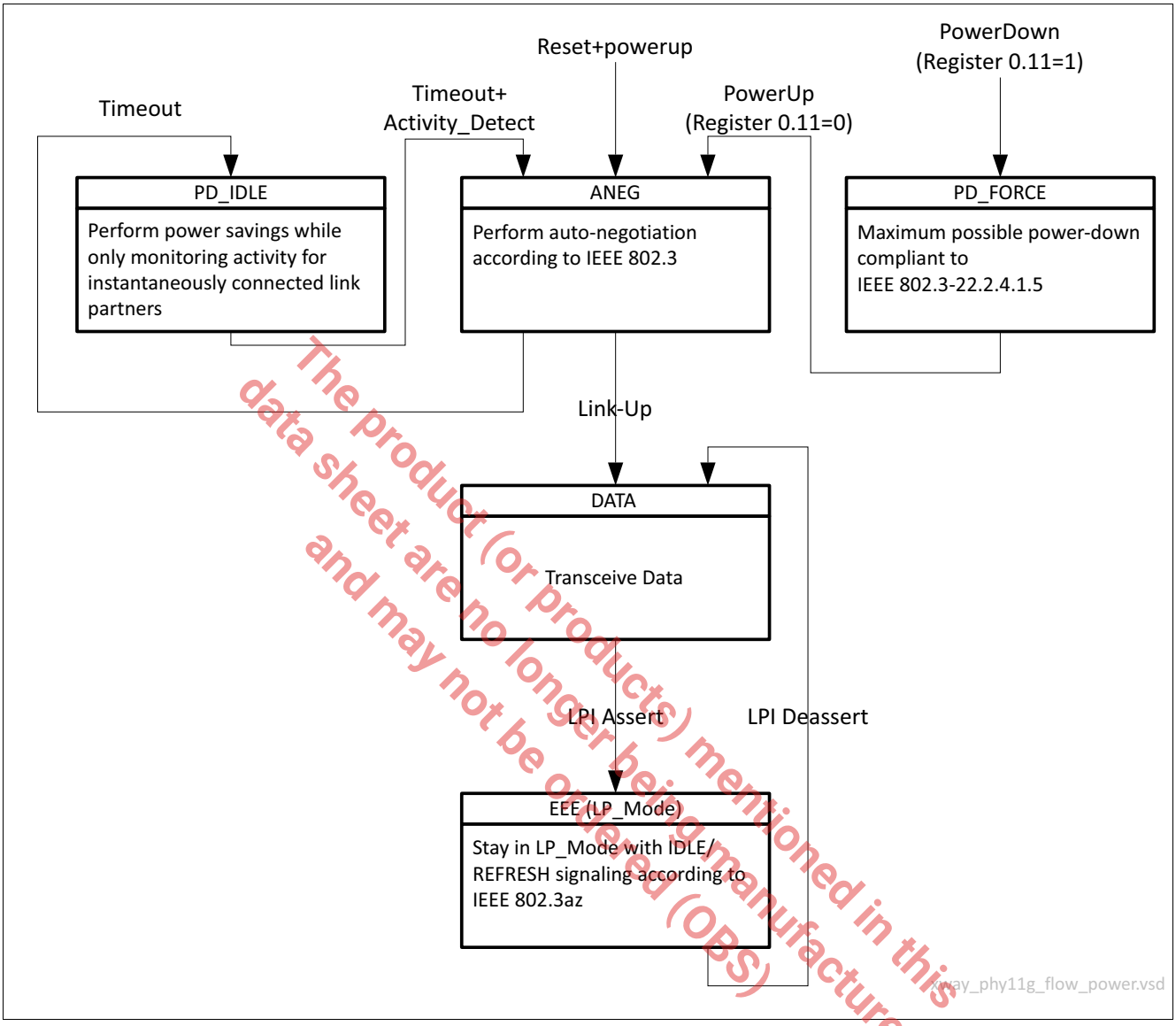

The product (or products) mentioned in this data sheet are no longer being manufactured and may not be ordered (OBS)

Figure 34 State Diagram for Power-Down Mode Management

3.5.5.1 PD_FORCE Mode

The PD_FORCE mode is entered by setting the register `MDIO.STD.CTRL.PD` to logic 1, regardless of the current state of the device. Active links are dropped when the PHY is leaving the DATA mode. The sleep mode corresponds to power down as specified in IEEE 802.3 [1], clause 22.2.4.1.5. The device still reacts to MDIO management transactions. The interface clocks to the MAC are switched off. No signal is transmitted on the MDI.

Since this mode is entered manually, the device will wake neither itself nor any link partner. Leaving the PD_FORCE mode is only possible by setting the register `MDIO.STD.CTRL.PD` = 0_B.

3.5.5.2 ANEG Mode

In the Auto-Negotiation (ANEG) mode, the PHY tries to establish a connection to a potential link partner. The PHY remains in this state for a reasonably long time until a successful link partner has been detected, either through parallel detection or by an auto-negotiation process itself. After a successful link partner detection, the PHY enters the DATA mode by performing a link-up. However, since in most Ethernet systems the default mode is still an open port (no link-partner is connected), the idle power consumption during ANEG mode contributes significantly to the power budget. The GPY112 supports an optimized power-down mode during auto-negotiation. Whenever no link partner is detected for a certain amount of time, the PHY moves into the PD_IDLE mode (**Chapter 3.5.5.3**). It only comes back from the PD_IDLE mode into the ANEG mode after a time-out, or whenever a signal is detected coming from the link partner. Returning to ANEG mode after a time-out is required to wake up link partners that use similar power-saving schemes, for example another GPY112.

3.5.5.3 PD_IDLE Mode

This is a sub-state supporting power-saving methodologies during auto-negotiation (see also **Chapter 3.5.5.2**).

3.5.5.4 DATA Mode

The DATA mode is used to establish and maintain a link connection. Once this connection is dropped, the PHY moves back into ANEG mode. During DATA mode, the PHY is linked up and data can be transmitted and received. If the EEE mode (**Chapter 3.5.5.5**) of operation has been negotiated during the ANEG mode, the PHY moves into and out of the EEE mode whenever instructed to by the MAC's LPI agent.

3.5.5.5 EEE Mode

This is the Energy-Efficient Ethernet (EEE) low-power mode which is entered after an LPI assert command from the MAC's LPI agent. More details can be found in **Chapter 3.5.3**.

The product(s) mentioned in this data sheet are no longer being manufactured and may not be ordered (OBS)

3.6 Testing Functions

This section describes the test and verification features supported for the GPY112.

3.6.1 JTAG Interface

The GPY112 integrates a JTAG port according to IEEE 1149.1 [8], which defines a test access port and a boundary scan architecture. The JTAG interface of the GPY112 consists of a 4-pin Test Access Port (TAP) as specified in Chapter 2.2.6. It includes the mandatory signals TMS, TCK, TDI and TDO.

When using JTAG mode with the internal DC/DC switching regulator, a clock signal needs to be applied at XTAL.

The integrated TAP controller of the GPY112 supports the op-codes as shown in Table 31.

Table 31 JTAG TAP Controller Op-Codes

Instruction	Instruction Code	JTAG Register	Register Width	Comment
EXTEST	00000_B	Boundary scan		Allows for testing of external circuitry connected between GPY112 and other components on the same PCB. The GPY112 drives a previously loaded (using the PRELOAD instruction) pattern to all its outputs and samples all its inputs.
SAMPLE/PRELOAD	00001_B	Boundary scan		Allows a snapshot to be taken of all pins within the boundary scan during normal mode of operation, as well as for the values to be read out. This instruction also allows for patterns to be loaded into the boundary scan test cells in advance of other JTAG test instructions.
IDCODE	10001_B	Device ID	32	Returns the JTAG boundary scan ID according to Table 32 on TDO.
CLAMP	00010_B	Bypass	1	Allows the state of the signals driven from all GPY112 pins within the boundary scan to be determined from the boundary scan register. Simultaneously, the bypass register is selected as the serial path between TDI and TDO. The signals determined from the boundary scan register remain unchanged while the CLAMP instruction is selected.
HIGHZ	00011_B	Bypass	1	Forces all outputs of the GPY112 into a high-impedance state. This prevents damage of components when testing according to IEEE1149.1 with components not following this standard.
BYPASS	11111_B	Bypass	1	Bypasses the integrated TAP controller by connecting TDI to TDO via a single register, i.e. with one TCK period delay.
RESERVED	Remaining			

The product (or products) mentioned in this data sheet are no longer being manufactured and may not be ordered (OPS).

As specified in Table 31, the IDCODE instruction returns the device ID on the TDO pin. The encoding of this device ID is given in Table 32.

Table 32 JTAG Boundary Scan ID

Description	Device Version [31:28]	Device Code [27:12]	Manufacture Code [11:1]	Mandatory LSB
Value	0001_B	$0000\ 0001\ 1100\ 1101_B$	$0000\ 1000\ 001_B$	1_B

3.6.2 Payload Data Tests

This chapter specifies several payload-data test features that are integrated in the GPY112.

3.6.2.1 Test Packet Generator (TPG)

The integrated Test Packet Generator (TPG) allows for test packets to be sent over the line even when no MAC is connected to the MII, or when the connected MAC is inactive. This is done by multiplexing the TPG output into the transmit data path of the MAC interface. The TPG is controlled by `MDIO.PHY.TPGCTRL` and `MDIO.PHY.TPGDATA` (refer to **Test-Packet Generator Control** and **Test-Packet Generator Data**). It can be effectively used in the following applications:

- Electrical-characteristics test for 10BASE-T and 100BASE-TX
- BER measurements

The test packet is limited to layer-2 functionality with restricted configuration possibilities determined by `MDIO.PHY.TPGCTRL`. The basic test packet structure is shown in **Figure 35**.

The product (or products) mentioned in this data sheet are no longer being manufactured and may not be ordered (OBS)

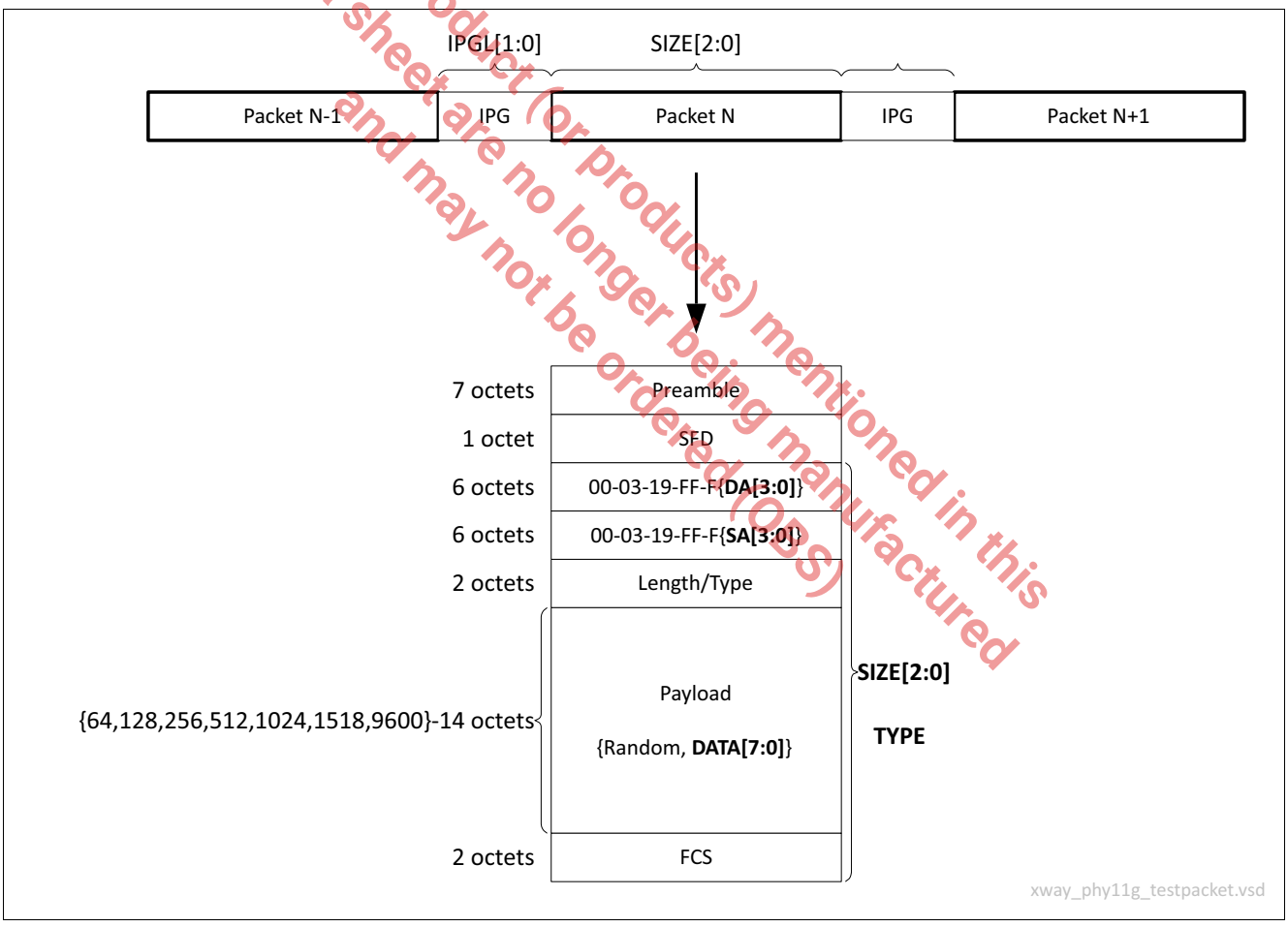

Figure 35 Test Packet Format

3.6.2.2 Error Counters

The GPY112 incorporates a general-purpose error counter, accessible via the `MDIO.PHY.ERRCNT.*` MDIO management registers. `MDIO.PHY.ERRCNT.SEL` allows an error source to be selected. The number of errors are counted and written to `MDIO.PHY.ERRCNT.COUNT`. This counter is cleared upon read access, and saturates at the value `MDIO.PHY.ERRCNT.COUNT` = FF_H. This prevents ambiguous monitoring results created by an overflow. The error counter is only applicable to the twisted-pair PHY modes. For information on types of errors, refer to **Chapter 4**.

3.6.3 Test Loops

The GPY112 supports several te t loops to support system integration. Note that these loops are activated on the first link-up after the register programming.

The individual loop-back functions are covered in the following sections, as well as how to enable and disable them.

The product(or product(s) mentioned in this data sheet are no longer being manufactured and may not be ordered (OBS)

3.6.3.1 Near-End Test Loops

The near-end test loops are used to verify system integration of an GPY112 device. They allow for closed loop-backs of data and signals at different OSI reference layers. The following sections describe these loop-backs in descending order of OSI abstraction layer.

3.6.3.1.1 MAC Interface Test Loop

The MAC interface test loop allows raw xMII transmit data to be looped back to the xMII receive port. In the high-level block diagram in **Figure 36**, the test loop data-path is marked by the area shaded in gray. This test loop can be applied to all the supported MAC interfaces described in **Chapter 3.2**. If required, the conversion of data and control information is handled internally.

There are two methods for setting up this test loop. The first uses the IEEE loop-back setting: `MDIO.STD.CTRL.LB` = 1_B. In this mode, the MII speed must be configured manually using the `MDIO.STD.CTRL.SS*` speed selection bits. Also, the PHY is not operable towards the MDI.

The second method uses the `MDIO.PHY.PHYCTL1.TLOOP = NETL` GPY112 proprietary test-loop setting. The test loop is activated at the next link-up.

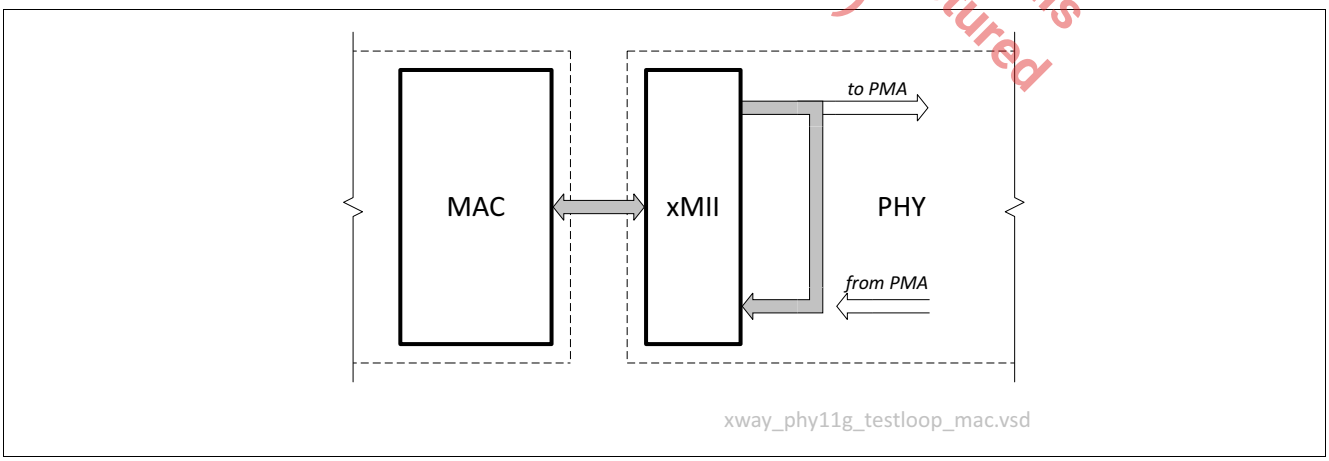

Figure 36 MAC Interface Near-End Test Loop

3.6.3.1.2 MDI Test Loop

The MDI test loop allows for loop-back of the signal at the MDI connector, for example RJ45 or SMB. Referring to the four available twisted pairs in a CAT5 or equivalent cable type, pair A is connected to pair B, and pair C to D. This shorting of near-end twisted pairs must be enabled using specialized termination circuitry. Note that no additional resistors are required, since the ports of the GPY112 are already inherently terminated. **Figure 37** shows a high-level block diagram, where the test loop data-path is marked by the area shaded in gray. This test loop can be applied to all the supported MAC interfaces described in **Chapter 3.2**. The test-loop mode is activated by setting `MDIO.PHY.PHYCTL1.TLOOP = RJ45`. The test loop is activated at the next link-up.

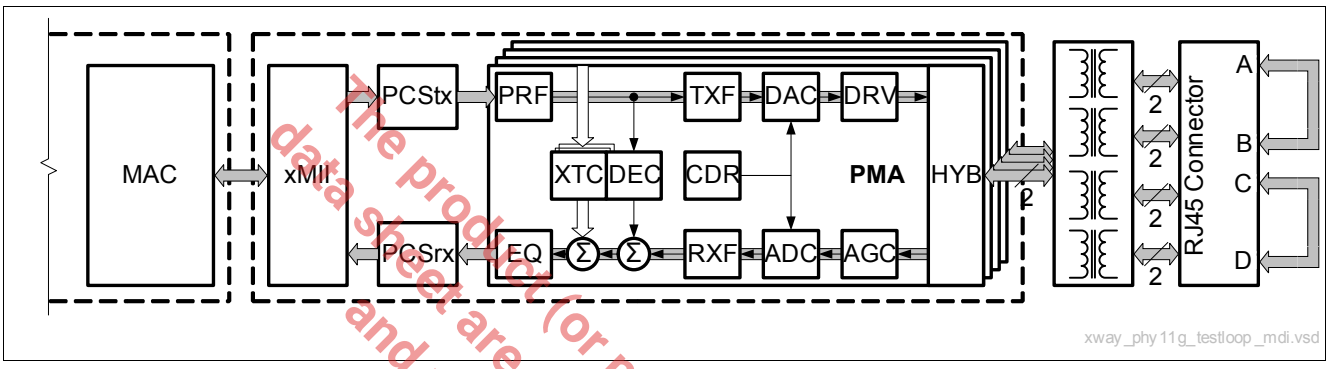

Figure 37 MDI connector Near-End Test Loop

3.6.3.1.3 Echo Test Loop

The DEC (Digital Echo Canceler) test loop allows for the transmit signal to be looped back via the Digital Echo Canceler (DEC). This loop-back is similar to the functionality of the MDI test loop as described in **Chapter 3.6.3.1.2**, except that it does not require a special termination circuitry at the MDI connector. The user of this test loop has the option to terminate each twisted pair with a 100 Ω resistor. When executing this test, the PMA trains the DEC to the echo that is inherently present because of non-ideal line terminations. Since there is no far-end signal, and the echo is canceled out at the summation point, the synthesized echo replica signal at the output of the DEC is used as a receive signal. This setup allows for the complete transceiver to be tested in 1000BASE-T mode, without the need for additional hardware to be attached. **Figure 38** shows a high-level block diagram, where the test loop data-path is marked by the area shaded in gray. This test loop can be applied to all the supported MAC interfaces described in **Chapter 3.2**, but is only applicable to 1000BASE-T. The test loop is activated by setting `MDIO.PHY.PHYCTL1.TLOOP = ECHO`, and by activating the 1000BASE-T forced mode using `MDIO.STD.CTRL.SSM` = 1_B and `MDIO.STD.CTRL.SSL` = 0_B.

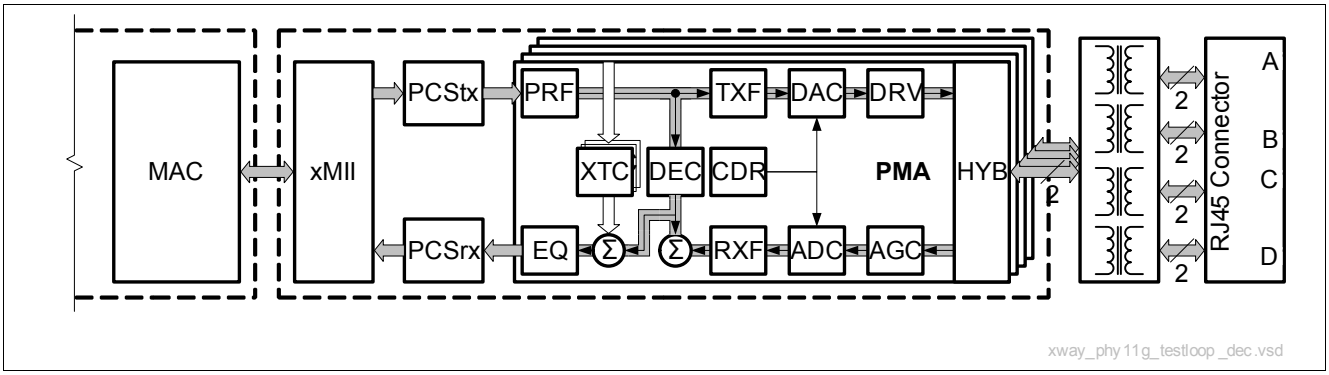

Figure 38 Echo Near-End Test Loop

The product (or product(s) mentioned in this data sheet are no longer being manufactured and may not be ordered (OBS).

3.6.3.2 Far-End Test Loop

The PCS far-end test loop allows for the receive data at the output of the receive PCS to be fed back into the transmit path, that is, the input of the transmit PCS. The received data is also available at the xMII interface output, however all xMII transmit data is ignored in this test mode. **Figure 39** shows a high-level block diagram, where the test loop data-path is marked by the area shaded in gray. This test loop can be applied to all the supported MAC interfaces described in **Chapter 3.2**. The test is also applicable to all supported types of MDI physical-layer standards as described in **Chapter 3.3**. This test loop is activated by setting the bit `MDIO.PHY.PHYCTL1.TLOOP = FETL`. Note that the test-loop is only operable when the link is operational. It is activated at the next link-up.

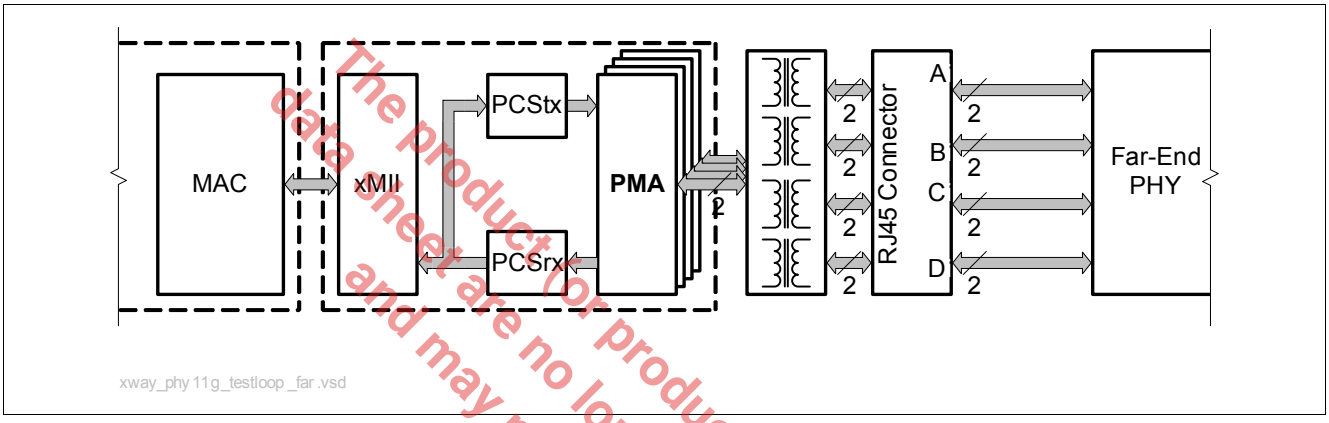

Figure 39 PCS Far-End Test Loop

The product(or products) mentioned in this data sheet are no longer being manufactured and may not be ordered (OBS)

4 MDIO Registers

This chapter defines all the registers needed to operate the module "MDIO_REGIST ERS".[1)]

Table 33 Registers Address Space

Module	Base Address	End Address	Note
MDIO_REGISTERS	00_H	60_H	

Table 34 Registers Overview

Register Short Name	Register Long Name	Offset Address	Page Number
STD			
STD_CTRL	Control	00_H	92
STD_STAT	Status Registers	01_H	95
STD_PHYID1	PHY Identifier 1	02_H	97
STD_PHYID2	PHY Identifier 2	03_H	98
STD_AN_ADV	Auto-Negotiation Advertisement	04_H	99
STD_AN_LPA	Auto-Negotiation Link-Partner Ability	05_H	100
STD_AN_EXP	Auto-Negotiation Expansion	06_H	102
STD_AN_NPTX	Auto-Negotiation Next-Page Transmit Register	07_H	103
STD_AN_NPRX	Auto-Negotiation Link-Partner Received Next-Page Register	08_H	104
STD_GCTRL	Gigabit Control Register	09_H	106
STD_GSTAT	Gigabit Status Register	$0A_H$	108
STD_RES11	Reserved	$0B_H$	110
STD_RES12	Reserved	$0C_H$	110
STD_MMDCTRL	MMD Access Control Register	$0D_H$	111
STD_MMDDATA	MMD Access Data Register	$0E_H$	112
STD_XSTAT	Extended Status Register	$0F_H$	113
PHY			
PHY_PHYPERF	Physical Layer Performance Status	10_H	114
PHY_PHYSTAT1	Physical Layer Status 1	11_H	115
PHY_PHYSTAT2	Physical Layer Status 2	12_H	116
PHY_PHYCTL1	Physical Layer Control 1	13_H	117
PHY_PHYCTL2	Physical Layer Control 2	14_H	119
PHY_ERRCNT	Error Counter	15_H	121
PHY_EECTRL	EEPROM Control Register	16_H	122
PHY_MIICTRL	Media-Independent Interface Control	17_H	124
PHY_MIISTAT	Media-Independent Interface Status	18_H	127
PHY_IMASK	Interrupt Mask Register	19_H	128
PHY_ISTAT	Interrupt Status Register	$1A_H$	131

The Product (or products) mentioned in this data sheet are no longer being manufactured and may not be ordered (OBS)

1) Generated by REFIGE v1.4 - Beta Release XIV

Table 34 Registers Overview (cont'd)

Register Short Name	Register Long Name	Offset Address	Page Number
PHY_LED	LED Control Register	$1B_H$	134
PHY_TPGCTRL	Test-Packet Generator Control	$1C_H$	136
PHY_TPGDATA	Test-Packet Generator Data	$1D_H$	139
PHY_FWV	Firmware Version Register	$1E_H$	140
PHY_RES1F	Reserved	$1F_H$	141

The register is addressed wordwise.

The product (or products) mentioned in this data sheet are no longer being manufactured and may not be ordered (OBS)

Table 35 Register Access Types

Mode	Symbol
Status Register, Latch-High	ROLH
Status Register, Latch-Low	ROLL
Status Register, Self-Clearing	ROSC
Read-Write Register	RW
Read-Write Register, Self-Clearing	RWSC
Status Register	RO

The product (or products) mentioned in this data sheet are no longer being manufactured and may not be ordered (OBS)

4.1 STD: Standard Management Registers

This section describes the IEEE 802.3 standard management registers.

Control

This register controls the main functions of the PHY. See also IEEE 802.3-2008 22.2.4.1.

STD_CTRL	Offset	Reset Value
Control	00_H	1040_H

15	14	13	12	11	10	9	8
RST	LB	SSL	ANEN	PD	ISOL	ANRS	DPLX
rwsc	rw	rw	rw	rw	rw	rwsc	rw
7	6	5					0
COL	SSM	RES					
rw	rw	ro					

Field	Bits	Type	Description
RST	15	RWSC	**Reset** Resets the PHY to its default state. Active links are terminated. Note that this is a self-clearing bit which is set to zero by the hardware after reset has been done. See also IEEE 802.3-2008 22.2.4.1.1. **Constants** 0_B **NORMAL** Normal operational mode 1_B **RESET** Resets the device
LB	14	RW	**Loop-Back** This mode enables looping back of MII data from the transmit to the receive direction. No data is transmitted to the medium via MDI. The device operates at the selected speed. The collision signal remains de-asserted unless otherwise forced by the collision test. See also IEEE 802.8-2008 22.2.4.1.2. **Constants** 0_B **NORMAL** Normal operational mode 1_B **ENABLE** Closes the loop-back from TX to RX at xMII
SSL	13	RW	**Forced Speed-Selection LSB** Note that this bit only takes effect when the auto-negotiation process is disabled, that is, bit CTRL.ANEN is set to zero. This is the LSB (CTRL.SSL) of the forced speed-selection register SS. In conjunction with the MSB (CTRL.SSM), the following encoding is valid: SS=0: 10 Mbit/s SS=1: 100 Mbit/s SS=2: 1000 Mbit/s SS=3: Reserved

The product (or products) mentioned in this data sheet are no longer being manufactured and may not be ordered (OBS)

Field	Bits	Type	Description
ANEN	12	RW	**Auto-Negotiation Enable** Allows enabling and disabling of the auto-negotiation process capability of the PHY. If enabled, the force bits for duplex mode (CTRL.DPLX) and the speed selection (CTRL.SSM, CTRL.SSL) become inactive. Otherwise, the force bits define the PHY operation. See also IEEE 802.3-2008 22.2.4.1.4. **Constants** 0_B **DISABLE** Disable the auto-negotiation protocol 1_B **ENABLE** Enable the auto-negotiation protocol
PD	11	RW	**Power Down** Forces the device into a power-down state where power consumption is the bare minimum required to still maintain the MII management interface communication. When activating the power-down functionality, the PHY terminates active data links. None of the xMII interface work in power-down mode. See also IEEE 802.3-2008 22.2.4.1.5. **Constants** 0_B **NORMAL** Normal operational mode 1_B **POWERDOWN** Forces the device into power-down mode
ISOL	10	RW	**Isolate** The isolation mode isolates the PHY from the MAC. MAC interface inputs are ignored, whereas MAC interface outputs are set to tristate (high-impedance). See also IEEE 802.3-2008 22.2.4.1.6. **Constants** 0_B **NORMAL** Normal operational mode 1_B **ISOLATE** Isolates the PHY from the MAC
ANRS	9	RWSC	**Restart Auto-Negotiation** Restarts the auto-negotiation process on the MDI. This bit does not take any effect when auto-negotiation is disabled using (CTRL.ANEN). Note that this bit is self-clearing after the auto-negotiation process is initiated. See also IEEE 802.3-2008 22.2.4.1.7. **Constants** 0_B **NORMAL** Stay in current mode 1_B **RESTART** Restart auto-negotiation
DPLX	8	RW	**Forced Duplex Mode** Note that this bit only takes effect when the auto-negotiation process is disabled, that is, bit CTRL.ANEN is set to zero. This bit controls the forced duplex mode. It allows forcing of the PHY into full or half-duplex mode. Note that this bit does not take effect in loop-back mode, that is, when bit CTRL.LB is set to one. See also IEEE 802.3-2008 22.2.4.1.8. **Constants** 0_B **HD** Half duplex 1_B **FD** Full duplex

The product(s) mentioned in this data sheet are no longer being manufactured and may not be ordered (OBS)

Field	Bits	Type	Description
COL	7	RW	**Collision Test** Allows$WORKAREA/units/mdio/source testing of the COL signal at the xMII interface. When the collision test is enabled, the state of the TX_EN signal is looped back to the COL signal within a minimum latency time. See also IEEE 802.3-2008 22.2.4.1.9. **Constants** 0_B **DISABLE** Normal operational mode 1_B **ENABLE** Activates the collision test
SSM	6	RW	**Forced Speed-Selection MSB** See the description of SSL. See also IEEE 802.3-2008 22.2.4.1.3.
RES	5:0	RO	**Reserved** Write as zero, ignore on read.

The product (or products) mentioned in this data sheet are no longer being manufactured and may not be ordered (OBS)

Status Registers

This register contains status and capability information about the device. Note that all bits are read-only. A write access by the MAC does not have any effect. See also IEEE 802.3-2008 22.2.4.2.

STD_STAT	Offset	Reset Value
Status Registers	01_H	7949_H

15	14	13	12	11	10	9	8
CBT4	**CBTXF**	**CBTXH**	**XBTF**	**XBTH**	**CBT2F**	**CBT2H**	**EXT**
ro	ro	ro	ro	ro	ro	ro	ro
7	6	5	4	3	2	1	0
RES	**MFPS**	**ANOK**	**RF**	**ANAB**	**LS**	**JD**	**XCAP**
ro	ro	ro	rolh	ro	roll	rolh	ro

The Product (or product) mentioned in this data sheet are no longer being manufactured and may not be ordered (OBS)

Field	Bits	Type	Description
CBT4	15	RO	**IEEE 100BASE-T4** Specifies the 100BASE-T4 ability. See also IEEE 802.3-2008 22.2.4.2.1. **Constants** 0_B **DISABLED** PHY does not support this mode 1_B **ENABLED** PHY supports this mode
CBTXF	14	RO	**IEEE 100BASE-TX Full-Duplex** Specifies the 100BASE-TX full-duplex ability. See also IEEE 802.3-2008 22.2.4.2.2. **Constants** 0_B **DISABLED** PHY does not support this mode 1_B **ENABLED** PHY supports this mode
CBTXH	13	RO	**IEEE 100BASE-TX Half-Duplex** Specifies the 100BASE-TX half-duplex ability. See also IEEE 802.3-2008 22.2.4.2.3. **Constants** 0_B **DISABLED** PHY does not support this mode 1_B **ENABLED** PHY supports this mode
XBTF	12	RO	**IEEE 10BASE-T Full-Duplex** Specifies the 10BASE-T full-duplex ability. See also IEEE 802.3-2008 22.2.4.2.4. **Constants** 0_B **DISABLED** PHY does not support this mode 1_B **ENABLED** PHY supports this mode
XBTH	11	RO	**IEEE 10BASE-T Half-Duplex** Specifies the 10BASE-T half-duplex ability. See also IEEE 802.3-2008 22.2.4.2.5. **Constants** 0_B **DISABLED** PHY does not support this mode 1_B **ENABLED** PHY supports this mode

Field	Bits	Type	Description
CBT2F	10	RO	**IEEE 100BASE-T2 Full-Duplex** Specifies the 100BASE-T2 full-duplex ability. See also IEEE 802.3-2008 22.2.4.2.6. **Constants** 0_B **DISABLED** PHY does not support this mode 1_B **ENABLED** PHY supports this mode
CBT2H	9	RO	**IEEE 100BASE-T2 Half-Duplex** Specifies the 100BASE-T2 half-duplex ability. See also IEEE 802.3-2008 22.2.4.2.7. **Constants** 0_B **DISABLED** PHY does not support this mode 1_B **ENABLED** PHY supports this mode
EXT	8	RO	**Extended Status** The extended status registers are used to specify 1000 Mbit/s speed capabilities in the register XSTAT. See also IEEE 802.3-2008 clause 22.2.4.2.16. **Constants** 0_B **DISABLED** No extended status information available in register 15 1_B **ENABLED** Extended status information available in register 15
RES	7	RO	**Reserved** Ignore when read.
MFPS	6	RO	**Management Preamble Suppression** Specifies the MF preamble suppression ability. See also IEEE 802.3-2008 22.2.4.2.9. **Constants** 0_B **DISABLED** PHY requires management frames with preamble 1_B **ENABLED** PHY accepts management frames without preamble
ANOK	5	RO	**Auto-Negotiation Completed** Indicates whether the auto-negotiation process is completed or in progress. See also IEEE 802.3-2008 22.2.4.2.10. **Constants** 0_B **RUNNING** Auto-negotiation process is in progress 1_B **COMPLETED** Auto-negotiation process is completed
RF	4	ROLH	**Remote Fault** Indicates the detection of a remote fault event. See also IEEE 802.3-2008 22.2.4.2.11. **Constants** 0_B **INACTIVE** No remote fault condition detected 1_B **ACTIVE** Remote fault condition detected
ANAB	3	RO	**Auto-Negotiation Ability** Specifies the auto-negotiation ability. See also IEEE 802.3-2008 22.2.4.2.12. **Constants** 0_B **DISABLED** PHY is not able to perform auto-negotiation 1_B **ENABLED** PHY is able to perform auto-negotiation

The product(s) mentioned in this data sheet are no longer being manufactured and may not be ordered (OBS)

Field	Bits	Type	Description
LS	2	ROLL	**Link Status** Indicates the link status of the PHY to the link partner. See also IEEE 802.3-2008 22.2.4.2.13. **Constants** 0_B **INACTIVE** The link is down. No communication with link partner possible. 1_B **ACTIVE** The link is up. Data communication with link partner is possible.
JD	1	ROLH	**Jabber Detect** Indicates that a jabber event has been detected. See also IEEE 802.3-2008 22.2.4.2.14. **Constants** 0_B **NONE** No jabber condition detected 1_B **DETECTED** Jabber condition detected
XCAP	0	RO	**Extended Capability** Indicates the availability and support of extended capability registers. See also IEEE 802.3-2008 22.2.4.2.15. **Constants** 0_B **DISABLED** Only base registers are supported 1_B **ENABLED** Extended capability registers are supported

The product(s) mentioned in this data sheet are no longer being manufactured and may not be ordered (OBS)

PHY Identifier 1

This is the first of two PHY identification registers containing the MSBs of a 32-bit code. This code specifies the Organizationally Unique Identifier (OUI), and the vendor's model and revision number.

STD_PHYID1	Offset	Reset Value
PHY Identifier 1	02_H	$D565_H$

15	8
OUI	
ro	

7	0
OUI	
ro	

Field	Bits	Type	Description
OUI	15:0	RO	**Organizationally Unique Identifier Bits 3:18** This register holds the bits 3:18 of the OUI code, which is specified to be OUI=AC-9A-96. See also IEEE 802.3-2008 22.2.4.3.1.

PHY Identifier 2

This is the second of 2 PHY identification registers containing the LSBs of a 32-bit code. This code specifies the Organizationally Unique Identifier (OUI), and the vendor's model and revision number. See also IEEE 802.3-2008 22.2.4.3.1.

STD_PHYID2	Offset	Reset Value
PHY Identifier 2	03_H	$A401_H$

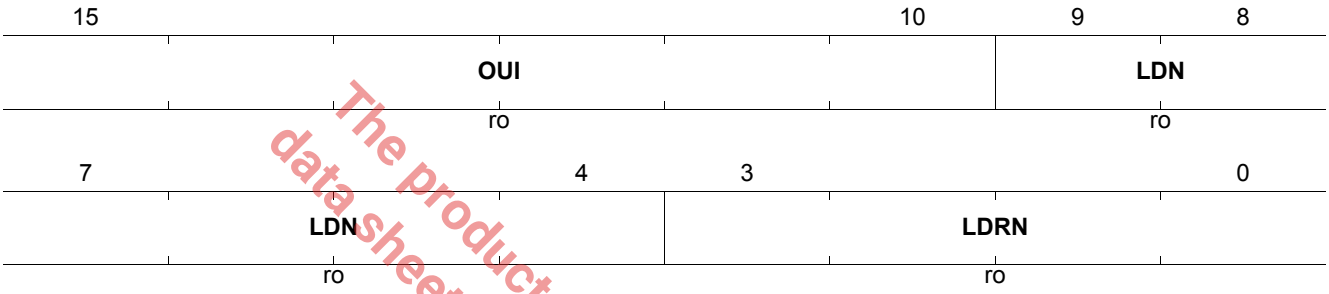

Field	Bits	Type	Description
OUI	15:10	RO	**Organizationally Unique Identifier Bits 19:24** This register holds the bits 19:24 of the OUI code, which is specified to be OUI=AC-9A-96.
LDN	9:4	RO	**Lantiq Device Number** Specifies the device number, in order to distinguish between several products.
LDRN	3:0	RO	**Lantiq Device Revision Number** Specifies the device revision number, in order to distinguish between several versions of this device.

The product (or products) mentioned in this data sheet are no longer being manufactured and may not be ordered (OBS)

Auto-Negotiation Advertisement

This register contains the advertised abilities of the PHY during auto-negotiation. See also IEEE 802.3-2008 28.2.4.1.3, as well as IEEE 802.3-2008 Table 28-2.

STD_AN_ADV	Offset	Reset Value
Auto-Negotiation Advertisement	04_H	$01E1_H$

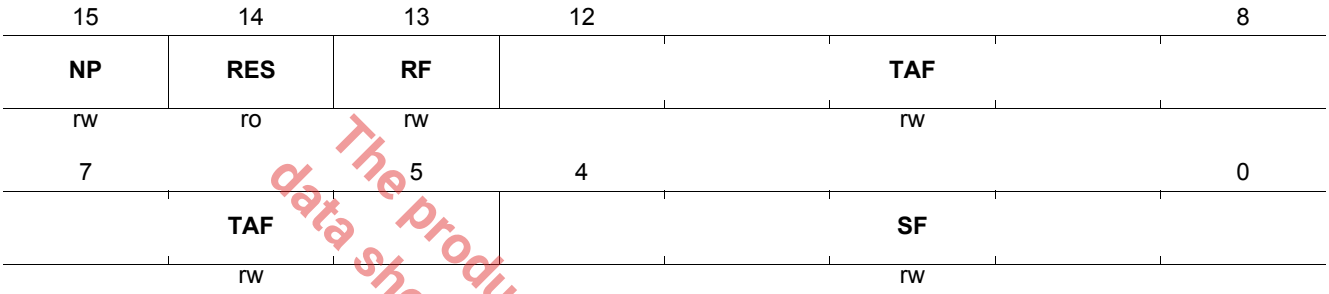

Field	Bits	Type	Description
NP	15	RW	**Next Page** Next-page indication is encoded in bit AN_ADV.NP regardless of the selector field value or link code word encoding. The PHY always advertises NP if a 1000BASE-T mode is advertised during auto-negotiation. See also IEEE 802.3-2008 28.2.1.2.6. **Constants** 0_B **INACTIVE** No next page(s) will follow 1_B **ACTIVE** Additional next page(s) will follow
RES	14	RO	**Reserved** Write as zero, ignore on read.
RF	13	RW	**Remote Fault** The remote fault bit allows indication of a fault to the link partner. See also IEEE 802.3-2008 28.2.1.2.4. **Constants** 0_B **NONE** No remote fault is indicated 1_B **FAULT** A remote fault is indicated

The product (or product(s) mentioned in this data sheet are no longer being manufactured and may not be ordered (OBS).

Field	Bits	Type	Description
TAF	12:5	RW	**Technology Ability Field** The technology ability field is an eight-bit wide field containing information indicating supported technologies as defined by the following constants specific to the selector field value. These bits are mapped to individual technologies such that abilities are advertised in parallel for a single selector field value. In converter mode, the field is always forced to value 0x60. The TAF encoding for the IEEE 802.3 selector (AN_ADV.SF=0x1) is described in IEEE 802.3-2008 Annex 28B.2 and in Annex 28D. See also IEEE 802.3-2008 28.2.1.2.2. **Constants** 00000001_B**XBT_HDX** Advertise 10BASE-T half duplex 00000010_B**XBT_FDX** Advertise 10BASE-T full duplex 00000100_B**DBT_HDX** Advertise 100BASE-TX half duplex 00001000_B**DBT_FDX** Advertise 100BASE-TX full duplex 00010000_B**DBT4** Advertise 100BASE-T4 00100000_B**PS_SYM** Advertise symmetric pause 01000000_B**PS_ASYM** Advertise asymmetric pause 10000000_B**RES** Reserved for future technologies
SF	4:0	RW	**Selector Field** The selector field is a five-bit wide field for encoding 32 possible messages. Selector field encoding definitions are shown in IEEE 802.3-2008 Annex 28A. Combinations not specified are reserved for future use. Reserved combinations of the selector field are not to be transmitted. See also IEEE 802.3-2008 28.2.1.2.1. **Constants** 00001_B**IEEE802DOT3** Select the IEEE 802.3 technology

The product(s) mentioned in this data sheet are no longer being manufactured and may not be ordered (OBS)

Auto-Negotiation Link-Partner Ability

All of the bits in the auto-negotiation link-partner ability register are read-only. A write to the auto-negotiation link-partner ability register has no effect. This register contains the advertised ability of the link partner (see also IEEE 802.3-2008 Tables 28-3 and 28-4). The bit definitions are a direct representation of the received link-code word (see also IEEE 802.3-2008 Figure 28-7). See also IEEE 802.3-2008 22.2.4.3.3.

STD_AN_LPA	Offset	Reset Value
Auto-Negotiation Link-Partner Ability	05_H	0000_H

15	14	13	12	11	10	9	8
NP	ACK	RF	TAF				
ro	ro	ro	ro				

7	6	5	4	3	2	1	0
TAF			SF				
ro			ro				

Field	Bits	Type	Description
NP	15	RO	**Next Page** Next-page request indication from the link partner. See also IEEE 802.3-2008 28.2.1.2.6. **Constants** 0_B **INACTIVE** No next page(s) will follow 1_B **ACTIVE** Additional next pages will follow
ACK	14	RO	**Acknowledge** Acknowledgment indication from the link partner's link-code word. See also IEEE 802.3-2008 28.2.1.2.5. **Constants** 0_B **INACTIVE** The device did not successfully receive its link partner's link code word 1_B **ACTIVE** The device has successfully received its link partner's link-code word
RF	13	RO	**Remote Fault** Remote fault indication from the link partner. See also IEEE 802.3-2008 28.2.1.2.4. **Constants** 0_B **NONE** Remote fault is not indicated by the link partner 1_B **FAULT** Remote fault is indicated by the link partner
TAF	12:5	RO	**Technology Ability Field** Indicates the link-partner capabilities as received from the link partner's link-code word. See also IEEE 802.3-2008 28.2.1.2.2. **Constants** 00000001_B**XBT_HDX** Link partner advertised 10BASE-T half duplex 00000010_B**XBT_FDX** Link partner advertised 10BASE-T full duplex. 00000100_B**DBT_HDX** Link partner advertised 100BASE-TX half duplex 00001000_B**DBT_FDX** Link partner advertised 100BASE-TX full duplex 00010000_B**DBT4** Link partner advertised 100BASE-T4 00100000_B**PS_SYM** Link partner advertised symmetric pause 01000000_B**PS_ASYM** Link partner advertised asymmetric pause 10000000_B**RES** Reserved for future technologies; should be zero
SF	4:0	RO	**Selector Field** The selector field represents one of the 32 possible messages. Note that it must fit to the advertised selector field in AN_ADV.SF. Selector field encoding definitions are shown in IEEE 802.3-2008 Annex 28A. **Constants** 00001_B**IEEE802DOT3** Select the IEEE 802.3 technology

The product(s) mentioned in this data sheet are no longer being manufactured and may not be ordered (OBS)

Auto-Negotiation Expansion

This is the auto-negotiation expansion register indicating the status of the link partner's auto-negotiation. See also IEEE 802.3-2008 28.2.4.1.5.

STD_AN_EXP	Offset	Reset Value
Auto-Negotiation Expansion	06_H	0004_H

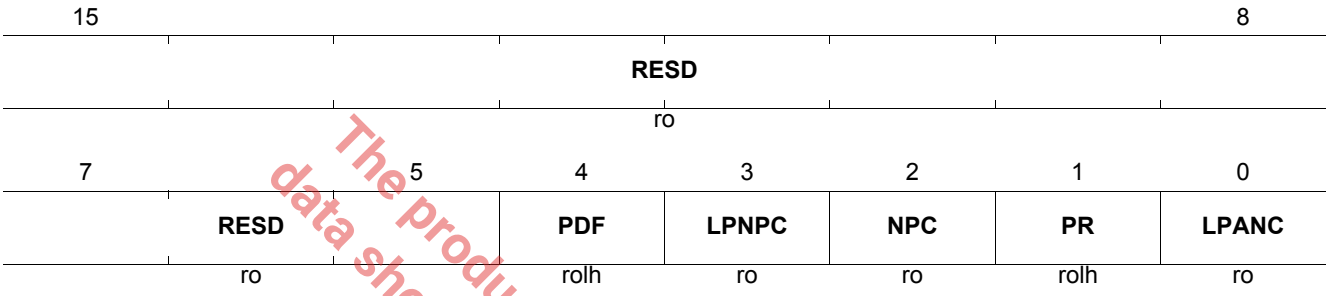

The product (or products) mentioned in this data sheet are no longer being manufactured and may not be ordered (OBS)

Field	Bits	Type	Description
RESD	15:5	RO	**Reserved** Write as zero, ignore on read.
PDF	4	ROLH	**Parallel Detection Fault** Note that this bit latches high. It is set to zero upon read of AN_EXP. See also IEEE 802.3-2008 28.2.4.1.5. **Constants** 0_B **NONE** A fault has not been detected via the parallel detection function 1_B **FAULT** A fault has been detected via the parallel detection function
LPNPC	3	RO	**Link Partner Next-Page Capable** See also IEEE 802.3-2008 28.2.4.1.5. **Constants** 0_B **UNABLE** Link partner is unable to exchange next pages 1_B **CAPABLE** Link partner is capable of exchanging next pages
NPC	2	RO	**Next-Page Capable** See also IEEE 802.3-2008 28.2.4.1.5. **Constants** 0_B **UNABLE** Local Device is unable to exchange next pages 1_B **CAPABLE** Local device is capable of exchanging next pages
PR	1	ROLH	**Page Received** Note that this bit latches high. It is set to zero upon read of AN_EXP. See also IEEE 802.3-2008 28.2.4.1.5. **Constants** 0_B **NONE** A new page has not been received 1_B **RECEIVED** A new page has been received
LPANC	0	RO	**Link Partner Auto-Negotiation Capable** See also IEEE 802.3-2008 28.2.4.1.5. **Constants** 0_B **UNABLE** Link partner is unable to auto-negotiate 1_B **CAPABLE** Link partner is auto-negotiation capable

Auto-Negotiation Next-Page Transmit Register

The auto-negotiation next-page transmit register contains the next-page link-code word to be transmitted when next-page ability is supported. On power-up, this register contains the default value of 0x2001, which represents a message page with the message code set to the null message. See also IEEE 802.3-2008 28.2.4.1.6.

STD_AN_NPTX	Offset	Reset Value
Auto-Negotiation Next-Page Transmit Register	07_H	2001_H

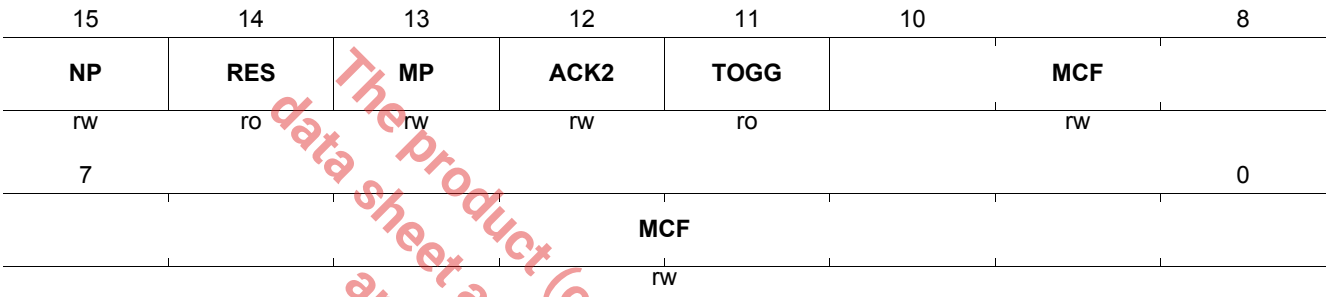

Field	Bits	Type	Description
NP	15	RW	**Next Page** See IEEE 802.3-2008 28.2.3.4. **Constants** 0_B **INACTIVE** Last page 1_B **ACTIVE** Additional next page(s) will follow
RES	14	RO	**Reserved** Write as zeros, ignore on read.
MP	13	RW	**Message Page** Indicates that the content of MCF is either an unformatted page or a formatted message. See IEEE 802.3-2008 28.2.3.4. **Constants** 0_B **UNFOR** Unformatted page 1_B **MESSG** Message page
ACK2	12	RW	**Acknowledge 2** See also IEEE 802.3-2008 28.2.3.4. **Constants** 0_B **INACTIVE** Device cannot comply with message 1_B **ACTIVE** Device will comply with message
TOGG	11	RO	**Toggle** See also IEEE 802.3-2008 28.2.3.4. **Constants** 0_B **ZERO** Previous value of the transmitted link-code word was equal to logic ONE 1_B **ONE** Previous value of the transmitted link-code word was equal to logic ZERO
MCF	10:0	RW	**Message or Unformatted Code Field** See also IEEE 802.3-2008 28.2.3.4.

The product (or product(s)) mentioned in this data sheet are no longer being manufactured and may not be ordered (OBS)

Auto-Negotiation Link-Partner Received Next-Page Register

The auto-negotiation link-partner received next-page register contains the next-page link-code word received from the link partner. See also IEEE 802.3-2008 28.2.4.1.7.

STD_AN_NPRX	Offset	Reset Value
Auto-Negotiation Link-Partner Received Next-Page Register	08_H	2001_H

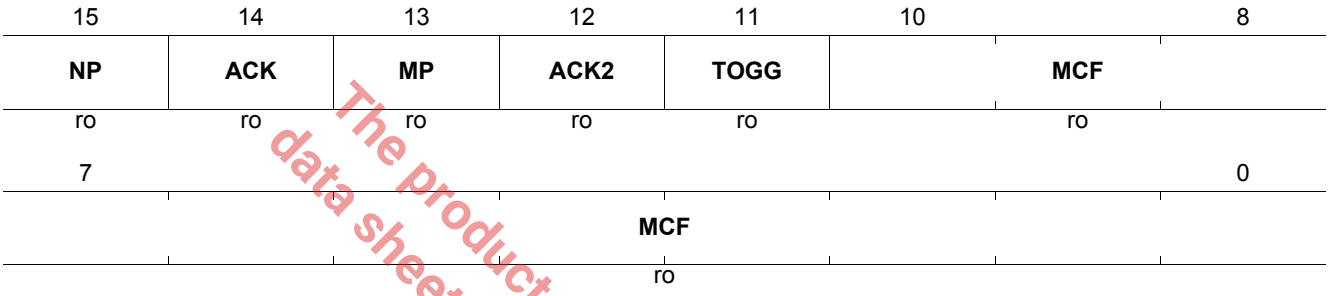

Field	Bits	Type	Description
NP	15	RO	**Next Page** See IEEE 802.3-2008 28.2.3.4. **Constants** 0_B **INACTIVE** No next pages to follow 1_B **ACTIVE** Additional next page(s) will follow
ACK	14	RO	**Acknowledge** See also IEEE 802.3-2008 28.2.3.4. **Constants** 0_B **INACTIVE** The device did not successfully receive its link partner's link-code word 1_B **ACTIVE** The device has successfully received its link partner's link-code word
MP	13	RO	**Message Page** Indicates that the content of MCF is either an unformatted page or a formatted message. See also IEEE 802.3-2008 28.2.3.4. **Constants** 0_B **UNFOR** Unformatted page 1_B **MESSG** Message page
ACK2	12	RO	**Acknowledge 2** See also IEEE 802.3-2008 28.2.3.4. **Constants** 0_B **INACTIVE** Device cannot comply with message 1_B **ACTIVE** Device will comply with message

The product (or products) mentioned in this data sheet are no longer being manufactured and may not be ordered (OBS)

Field	Bits	Type	Description
TOGG	11	RO	**Toggle** See also IEEE 802.3-2008 28.2.3.4. **Constants** 0_B **ZERO** Previous value of the transmitted link-code word was equal to logic ONE. 1_B **ONE** Previous value of the transmitted link-code word was equal to logic ZERO.
MCF	10:0	RO	**Message or Unformatted Code Field** See also IEEE 802.3-2008 28.2.3.4.

The product (or products) mentioned in this data sheet are no longer being manufactured and may not be ordered (OBS)

Gigabit Control Register

This is the control register used to configure the Gigabit Ethernet behavior of the PHY. See also IEEE 802.3-2008 40.5.1.1.

STD_GCTRL	Offset	Reset Value
Gigabit Control Register	09_H	0300_H

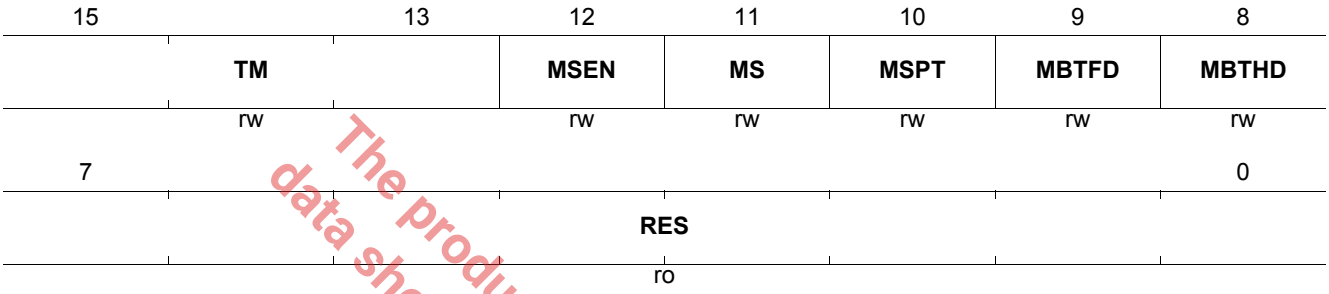

The product (or products) mentioned in this data sheet are no longer being manufactured and may not be ordered (OBS)

Field	Bits	Type	Description
TM	15:13	RW	**Transmitter Test Mode** This register field allows enabling of the standard transmitter test modes. See also IEEE 802.3-2008 Table 40-7. **Constants** 000_B **NOP** Normal operation 001_B **WAV** Test mode 1 transmit waveform test 010_B **JITM** Test mode 2 transmit jitter test in MASTER mode 011_B **JITS** Test mode 3 transmit jitter test in SLAVE mode 100_B **DIST** Test mode 4 transmitter distortion test 101_B **RESD0** Reserved, operations not identified. 110_B **CDIAG** Cable diagnostics. 111_B **ABIST** Analog build in self-test
MSEN	12	RW	**Master/Slave Manual Configuration Enable** See also IEEE 802.3-2008 40.5.1.1. **Constants** 0_B **DISABLED** Disable master/slave manual configuration value 1_B **ENABLED** Enable master/slave manual configuration value
MS	11	RW	**Master/Slave Config Value** Allows forcing of master or slave mode manually when AN_GCTRL.MSEN is set to logical one. See also IEEE 802.3-2008 40.5.1.1. **Constants** 0_B **SLAVE** Configure PHY as SLAVE during master/slave negotiation, only when AN_GCTRL.MSEN is set to logical one 1_B **MASTER** Configure PHY as MASTER during master/slave negotiation, only when AN_GCTRL.MSEN is set to logical one

Field	Bits	Type	Description
MSPT	10	RW	**Master/Slave Port Type** Defines whether the PHY advertises itself as a multi- or single-port device, which in turn impacts the master/slave resolution function. See also IEEE 802.3-2008 40.5.1.1. **Constants** 0_B **SPD** Single-port device 1_B **MPD** Multi-port device
MBTFD	9	RW	**1000BASE-T Full-Duplex** Advertises the 1000BASE-T full-duplex capability; always forced to 1 in converter mode. See also IEEE 802.3-2008 40.5.1.1. **Constants** 0_B **DISABLED** Advertise PHY as not 1000BASE-T full-duplex capable 1_B **ENABLED** Advertise PHY as 1000BASE-T full-duplex capable
MBTHD	8	RW	**1000BASE-T Half-Duplex** Advertises the 1000BASE-T half-duplex capability; always forced to 1 in converter mode. See also IEEE 802.3-2008 40.5.1.1. **Constants** 0_B **DISABLED** Advertise PHY as not 1000BASE-T half-duplex capable 1_B **ENABLED** Advertise PHY as 1000BASE-T half-duplex capable
RES	7:0	RO	**Reserved** Write as zero, ignore on read.

The product(s) mentioned in this data sheet are no longer being manufactured and may not be ordered (OBS)

Gigabit Status Register

This is the status register used to reflect the Gigabit Ethernet status of the PHY. See also IEEE 802.3-2008 40.5.1.1.

STD_GSTAT	Offset	Reset Value
Gigabit Status Register	$0A_H$	0000_H

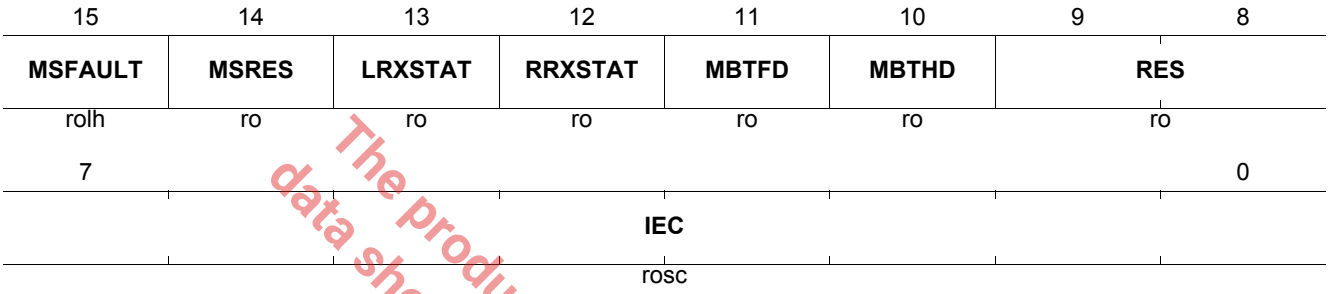

Field	Bits	Type	Description
MSFAULT	15	ROLH	**Master/Slave Manual Configuration Fault** This is a latching high bit. It is cleared upon each read of GSTAT. This bit will self clear on auto-negotiation enable or auto-negotiation complete. This bit will be set to active high if the number of failed master/slave resolutions reaches 7. See also IEEE 802.3-2008 40.5.1.1 register 10 in Table 40-3. **Constants** 0_B **OK** Master/slave manual configuration resolved successfully 1_B **NOK** Master/slave manual configuration resolved with a fault
MSRES	14	RO	**Master/Slave Configuration Resolution** See IEEE 802.3 40.5.1.1 register 10 in Table 40-3. **Constants** 0_B **SLAVE** Local PHY configuration resolved to SLAVE 1_B **MASTER** Local PHY configuration resolved to MASTER
LRXSTAT	13	RO	**Local Receiver Status** Indicates the status of the local receiver. See also IEEE 802.3-2008 40.5.1.1 register 10 in Table 40-3. **Constants** 0_B **NOK** Local receiver not OK 1_B **OK** Local receiver OK
RRXSTAT	12	RO	**Remote Receiver Status** Indicates the status of the remote receiver. See also IEEE 802.3-2008 40.5.1.1 register 10 in Table 40-3. **Constants** 0_B **NOK** Remote receiver not OK 1_B **OK** Remote receiver OK

The product (or product(s) mentioned in this data sheet are no longer being manufactured and may not be ordered (OBS)

Field	Bits	Type	Description
MBTFD	11	RO	**Link-Partner Capable of Operating 1000BASE-T Full-Duplex** See also IEEE 802.3-2008 40.5.1.1 register 10 in Table 40-3. **Constants** 0_B **DISABLED** Link partner is not capable of operating 1000BASE-T full-duplex 1_B **ENABLED** Link partner is capable of operating 1000BASE-T full-duplex
MBTHD	10	RO	**Link-Partner Capable of Operating 1000BASE-T Half-Duplex** See also IEEE 802.3-2008 40.5.1.1 register 10 in Table 40-3. **Constants** 0_B **DISABLED** Link partner is not capable of operating 1000BASE-T half-duplex 1_B **ENABLED** Link partner is capable of operating 1000BASE-T half-duplex
RES	9:8	RO	**Reserved** Write as zero, ignore on read.
IEC	7:0	ROSC	**Idle Error Count** Not implemented.

The product(or products) mentioned in this data sheet are no longer being manufactured and may not be ordered (OBS)

Reserved

Reserved. In IEEE 802.3-2008, this register is used for Power-Sourcing-Equipment (PSE) control functions (see IEEE 802.3-2008 33.6.1.1), which is not supported by this PHY.

STD_RES11	Offset	Reset Value
Reserved	$0B_H$	0000_H

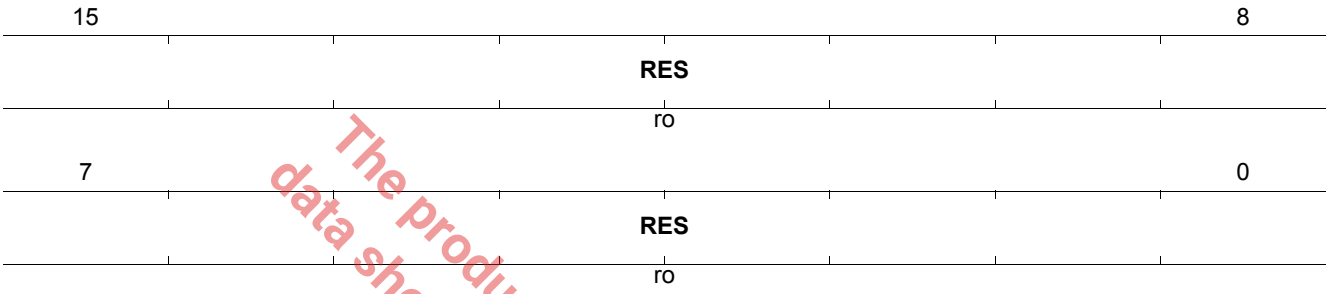

Field	Bits	Type	Description
RES	15:0	RO	**Reserved** Write as zero, ignored on read.

Reserved

Reserved. In IEEE 802.3-2008, this register is used for Power-Sourcing-Equipment (PSE) status functions (see IEEE 802.3-2008 33.6.1.2), which is not supported by this PHY.

STD_RES12	Offset	Reset Value
Reserved	$0C_H$	0000_H

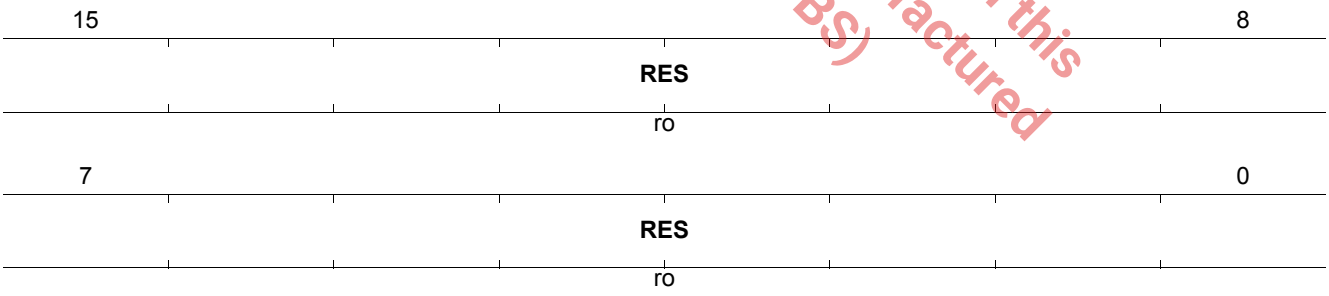

Field	Bits	Type	Description
RES	15:0	RO	**Reserved** Write as zero, ignored on read.

The product (or products) mentioned in this data sheet are no longer being manufactured and may not be ordered (OBS)

MMD Access Control Register

The MMD access control register is used in conjunction with the MMDDATA register to access the MMD register space. Each MMD maintains its own individual address register, as described in IEEE 802.3-2008 clause 45.2.8. The DEVAD field directs any accesses of register MMDDATA to the appropriate MMD as described in IEEE 802.3-2008 clause 45.2. For additional insight into the operation and use of the MMD registers, see IEEE 802.3-2008 clause 22.2.4.3.11, Annex 22D and clause 45.2.

STD_MMDCTRL	Offset	Reset Value
MMD Access Control Register	$0D_H$	0000_H

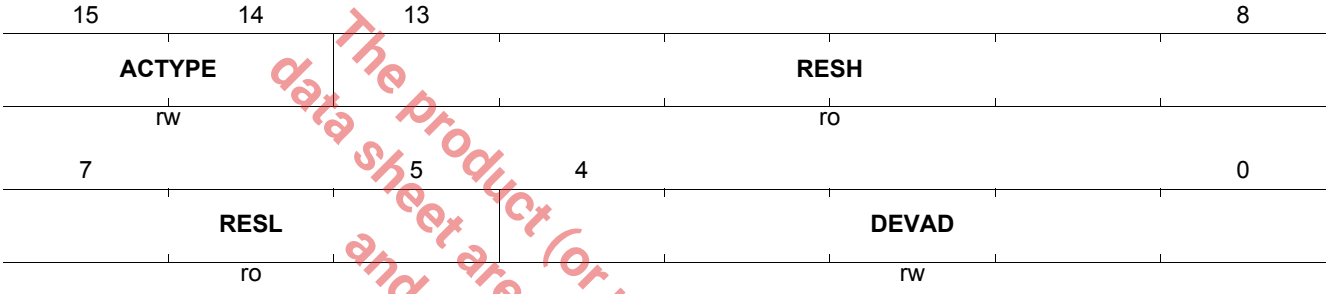

The product (or products) mentioned in this data sheet are no longer manufactured and may not be ordered (OBS)

Field	Bits	Type	Description
ACTYPE	15:14	RW	**Access Type Function** If the access of register MMDDATA is an address access (ACTYPE=0) then it is directed to the address register within the MMD associated with the value in the DEVAD field. Otherwise, both the DEVAD field and the MMD's address register direct the register MMDDATA data accesses to the appropriate registers within that MMD. The function field can be set to any of the constants defined (ADDRESS, DATA, DATA_PI, DATA_PIWR). **Constants** 00_B **ADDRESS** Accesses to register MMDDATA access the MMD individual address register 01_B **DATA** Accesses to register MMDDATA access the register within the MMD selected by the value in the MMD's address register 10_B **DATA_PI** Accesses to register MMDDATA access the register within the MMD selected by the value in the MMD's address register. After this access is complete, for both read and write accesses, the value in the MMD address field is incremented. 11_B **DATA_PIWR** Accesses to register MMDDATA access the register within the MMD selected by the value in the MMD's address register. After this access is complete, for write accesses only, the value in the MMDs address field is incremented. For read accesses, the value in the MMDs address field is not modified.
RESH	13:8	RO	**Reserved** Write as zero, ignored on read.
RESL	7:5	RO	**Reserved** Write as zero, ignored on read.

Field	Bits	Type	Description
DEVAD	4:0	RW	**Device Address** The DEVAD field directs any accesses of register MMDDATA to the appropriate MMD as described in IEEE 802.3-2008 clause 45.2.

MMD Access Data Register

The MMD access data register is used in conjunction with the MMD access control (MMDCTRL) register to access the MMD register space. For more information on MMD access, refer to IEEE 802.3-2008 clause 22.2.4.3.12, clause 45.2 and Annex 22D.

STD_MMDDATA — **Offset** $0E_H$ — **Reset Value** 0000_H

MMD Access Data Register

15	14	13	12	11	10	9	8
ADDR_DATA							
rw							

7	6	5	4	3	2	1	0
ADDR_DATA							
rw							

Field	Bits	Type	Description
ADDR_DATA	15:0	RW	**Address or Data Register** This register accesses either a specific MMD address register or the data content of the MMD register to which this address register points. Which of the functions is currently valid is defined by the MMDCTRL register.

The product (or products) mentioned in this data sheet are no longer being manufactured and may not be ordered (OBS)

Extended Status Register

This register contains extended status and capability information about the PHY. Note that all bits are read-only. A write access does not have any effect.

STD_XSTAT	Offset	Reset Value
Extended Status Register	$0F_H$	3000_H

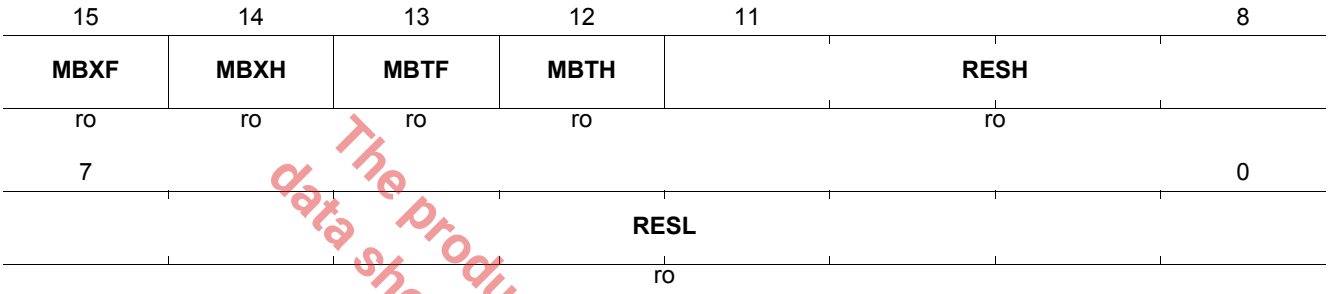

The product (or products) mentioned in this data sheet are no longer being manufactured and may not be ordered (OBS)

Field	Bits	Type	Description
MBXF	15	RO	**1000BASE-X Full-Duplex Capability** Specifies whether the PHY is capable of operating 1000BASE-X full-duplex. **Constants** 0_B **DISABLED** PHY does not support this mode 1_B **ENABLED** PHY supports this mode
MBXH	14	RO	**1000BASE-X Half-Duplex Capability** Specifies whether the PHY is capable of operating 1000BASE-X half-duplex. **Constants** 0_B **DISABLED** PHY does not support this mode 1_B **ENABLED** PHY supports this mode
MBTF	13	RO	**1000BASE-T Full-Duplex Capability** Specifies whether the PHY is capable of operating 1000BASE-T full-duplex. **Constants** 0_B **DISABLED** PHY does not support this mode 1_B **ENABLED** PHY supports this mode
MBTH	12	RO	**1000BASE-T Half-Duplex Capability** Specifies whether the PHY is capable of operating 1000BASE-T full-duplex. **Constants** 0_B **DISABLED** PHY does not support this mode 1_B **ENABLED** PHY supports this mode
RESH	11:8	RO	**Reserved** Ignore when read.
RESL	7:0	RO	**Reserved** Ignore when read.

4.2 PHY: PHY-Specific Management Registers

This chapter describes the PHY-specific management registers.

Physical Layer Performance Status

This register reports the PHY performance in the current mode of operation. The content of this register is only valid when the link is up.

PHY_PHYPERF	Offset	Reset Value
Physical Layer Performance Status	10_H	$80FF_H$



The product (or products) mentioned in this data sheet are no longer being manufactured and may not be ordered (OBS)

Field	Bits	Type	Description
FREQ	15:8	RO	**Frequency Offset of Link-Partner [ppm]** This register fields reports the measured frequency offset of the receiver in ppm as a signed 2's complement number. Note that a value of -128 (0x80) indicates an invalid number.
SNR	7:4	RO	**Receive SNR Margin [dB]** This register field reports the measured SNR margin of the receiver in dB. The value saturates at a 14-dB SNR margin for very short links and 0 dB for very long links. A value of 15 indicates an invalid number. **Constants** 1111_B**INVALID** Invalid value
LEN	3:0	RO	**Estimated Loop Length (Valid During Link-Up)** This register field reports the estimated loop length compared to a virtually ideal CAT5e straight cable. The unit is LEN x 10m. A value of 15 indicates an invalid number.

Physical Layer Status 1

This register reports PHY lock information, for example link-up, polarity reversals and port mapping. The content of this register is only valid when the link is up.

PHY_PHYSTAT1	Offset	Reset Value
Physical Layer Status 1	11_H	0000_H

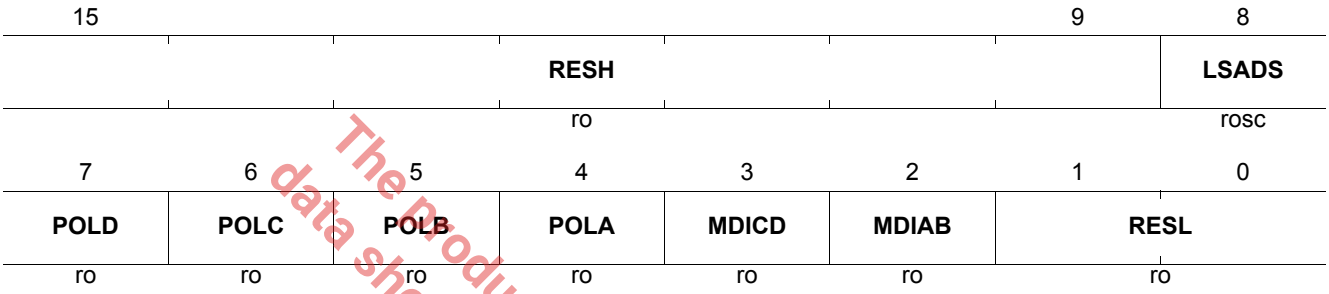

The Product (or products) mentioned in this data sheet are no longer being manufactured and may not be ordered (OBS)

Field	Bits	Type	Description
RESH	15:9	RO	**Reserved** Write as zero, ignored on read.
LSADS	8	ROSC	**Link-Speed Auto-Downspeed Status** Monitors the status of the link speed auto-downspeed controlled in PHYCTL1.LDADS **Constants** 0_B **NORMAL** Did not perform any link speed auto-downspeed 1_B **DETECTED** Detected an auto-downspeed
POLD	7	RO	**Receive Polarity Inversion Status on Port D** **Constants** 0_B **NORMAL** Polarity normal 1_B **INVERTED** Polarity inversion detected
POLC	6	RO	**Receive Polarity Inversion Status on Port C** **Constants** 0_B **NORMAL** Polarity normal 1_B **INVERTED** Polarity inversion detected
POLB	5	RO	**Receive Polarity Inversion Status on Port B** **Constants** 0_B **NORMAL** Polarity normal 1_B **INVERTED** Polarity inversion detected
POLA	4	RO	**Receive Polarity Inversion Status on Port A** **Constants** 0_B **NORMAL** Polarity normal 1_B **INVERTED** Polarity inversion detected
MDICD	3	RO	**Mapping of MDI ports C and D** **Constants** 0_B **MDI** Normal MDI mode 1_B **MDIX** Crossover MDI-X mode

Field	Bits	Type	Description
MDIAB	2	RO	**Mapping of MDI ports A and B** **Constants** 0_B **MDI** Normal MDI mode 1_B **MDIX** Crossover MDI-X mode
RESL	1:0	RO	**Reserved** Write as zero, ignored on read.

Physical Layer Status 2

This register reports PHY lock information, for example, pair skews in the GbE mode. The content of this register is only valid when the link is up.

PHY_PHYSTAT2 **Offset** **Reset Value**
Physical Layer Status 2 **12_H** **0000_H**

15	14	12	11	10	8
RESD	**SKEWD**		**RESC**	**SKEWC**	
ro	ro		ro	ro	

7	6	4	3	2	0
RESB	**SKEWB**		**RESA**	**SKEWA**	
ro	ro		ro	ro	

Field	Bits	Type	Description
RESD	15	RO	**Reserved** Write as zero, ignored on read.
SKEWD	14:12	RO	**Receive Skew on Port D** The skew is reported as an unsigned number of symbol periods.
RESC	11	RO	**Reserved** Write as zero, ignored on read.
SKEWC	10:8	RO	**Receive Skew on Port C** The skew is reported as an unsigned number of symbol periods.
RESB	7	RO	**Reserved** Write as zero, ignored on read.
SKEWB	6:4	RO	**Receive Skew on Port B** The skew is reported as an unsigned number of symbol periods.
RESA	3	RO	**Reserved** Write as zero, ignored on read.
SKEWA	2:0	RO	**Receive Skew on Port A** The skew is reported as an unsigned number of symbol periods.

The product (or products) mentioned in this data sheet are no longer being manufactured and may not be ordered (OBS)

Physical Layer Control 1

This register controls the PHY functions.

PHY_PHYCTL1	Offset	Reset Value
Physical Layer Control 1	13_H	0001_H

15	14	13	12	11	10	9	8
TLOOP			TXOFF	TXADJ			
rw			rw	rw			

7	6	5	4	3	2	1	0
POLD	POLC	POLB	POLA	MDICD	MDIAB	TXEEE10	AMDIX
rw	rw	rw	rw	rw	rw	rw	rw

The product (or product(s) mentioned in this data sheet are no longer being manufactured and may not be ordered (OBS)

Field	Bits	Type	Description
TLOOP	15:13	RW	**Test Loop** Configures predefined test loops. **Constants** 000_B **OFF** Test loops are switched off - normal operation. 001_B **NETL** Near-end test loop 010_B **FETL** Far-end test loop 011_B **ECHO** Echo test loop 100_B **RJTL** RL45 connector test loop 101_B **FETLS** Standalone Far-end test loop. No dependency on TX_CLK and RX_CLK on the (G)MII interface
TXOFF	12	RW	**Transmitter Off** This register bit allows turning off of the transmitter. This feature might be useful for return loss measurements. **Constants** 0_B **ON** Transmitter is on 1_B **OFF** Transmitter is off
TXADJ	11:8	RW	**Transmit Level Adjustment** Transmit-level adjustment can be used to fine tune the transmit amplitude of the PHY. The amplitude adjustment is valid for all supported speed modes. The adjustment is performed in digits. One digit represents 3.125 percent of the nominal amplitude. The scaling factor is gain = 1 + signed(TXADJ)*2^-7.
POLD	7	RW	**Transmit Polarity Inversion Status on Port D** **Constants** 0_B **NORMAL** Polarity normal 1_B **INVERTED** Polarity inversion
POLC	6	RW	**Transmit Polarity Inversion Status on Port C** **Constants** 0_B **NORMAL** Polarity normal 1_B **INVERTED** Polarity inversion

Field	Bits	Type	Description
POLB	5	RW	**Transmit Polarity Inversion Control on Port B** **Constants** 0_B **NORMAL** Polarity normal 1_B **INVERTED** Polarity inversion
POLA	4	RW	**Transmit Polarity Inversion Control on Port A** **Constants** 0_B **NORMAL** Polarity normal 1_B **INVERTED** Polarity inversion
MDICD	3	RW	**Mapping of MDI Ports C and D** **Constants** 0_B **MDI** Normal MDI mode 1_B **MDIX** Crossover MDI-X mode
MDIAB	2	RW	**Mapping of MDI Ports A and B** **Constants** 0_B **MDI** Normal MDI mode 1_B **MDIX** Crossover MDI-X mode
TXEEE10	1	RO	**Transmit Energy-Efficient Ethernet 10BASE-Te Amplitude** This register bit allows enabling of the 10BASE-Te energy-efficient mode transmitting only with a 1.75 V nominal amplitude. **Constants** 0_B **DISABLED** Transmit the 10Base-T amplitude, that is, 2.3 V 1_B **ENABLED** Transmit the 10BASE-Te amplitude, that is, 1.75 V
AMDIX	0	RW	**PHY Performs Auto-MDI/MDI-X or Uses Manual MDI/MDI-X** **Constants** 0_B **MANUAL** PHY uses manual MDI/MDI-X 1_B **AUTO** PHY performs Auto-MDI/MDI-X

The product (or products) mentioned in this data sheet are no longer being manufactured and may not be ordered (OBS)

Physical Layer Control 2

This register controls the PHY functions.

PHY_PHYCTL2	Offset	Reset Value
Physical Layer Control 2	14_H	8006_H

15	14	13	11	10	9	8
LSADS		RESH		CLKSEL	SDETP	STICKY
rw		ro		rw	rw	rw

7	4	3	2	1	0
RESL		ADCR	PSCL	ANPD	RES
ro		rw	rw	rw	ro

Field	Bits	Type	Description
LSADS	15:14	RW	**Link Speed Auto-Downspeed Control Register** Link speed auto-downspeed is a functionality which allows an Ethernet link to be established even in non-standard harsh cable environments. **Constants** 00_B **OFF** Do not perform link speed auto-downspeed 01_B **ADS2** Perform auto-downspeed of link speed after 2 consecutive failed link-ups 10_B **ADS3** Perform auto-downspeed of link speed after 3 consecutive failed link-ups 11_B **ADS4** Perform auto-downspeed of link speed after 4 consecutive failed link-ups
RESH	13:9	RO	**Reserved** Write as zero, ignored on read.
STICKY	8	RW	**Sticky-Bit Handling** Allows enabling/disabling of the sticky-bit handling for all PHY-specific MDIO register bits of type RW, except for the TPGCTRL register. This means that the current content of these registers is left untouched during a software reset if sticky-bit handling is enabled. **Constants** 0_B **OFF** Sticky-bit handling is disabled 1_B **ON** Sticky-bit handling is enabled
RESL	7:5	RO	**Reserved** Write as zero, ignored on read.
ADCR	4:3	RW	**ADC Resolution Boost.** Allows for the ADC resolution to be increased. **Constants** 00_B **DEFAULT** Default ADC resolution. 01_B **BOOST** ADC resolution boost.

The product (or product) mentioned in this data sheet are no longer being manufactured and may not be ordered (OBS)

Field	Bits	Type	Description
PSCL	2	RW	**Power-Consumption Scaling Depending on Link Quality** Allows enabling/disabling of the power-consumption scaling dependent on the link quality. **Constants** 0_B **OFF** PSCL is disabled 1_B **ON** PSCL is enabled
ANPD	1	RW	**Auto-Negotiation Power Down** Allows enabling/disabling of the power-down Modes during auto-negotiation looking for a link partner. **Constants** 0_B **OFF** ANPD is disabled 1_B **ON** ANPD is enabled

The product (or products) mentioned in this data sheet are no longer being manufactured and may not be ordered (OBS)

Error Counter

This register controls the error counter. It allows the number of errors detected in the PHY to be counted for monitoring purposes.

PHY_ERRCNT	Offset	Reset Value
Error Counter	15_H	0000_H

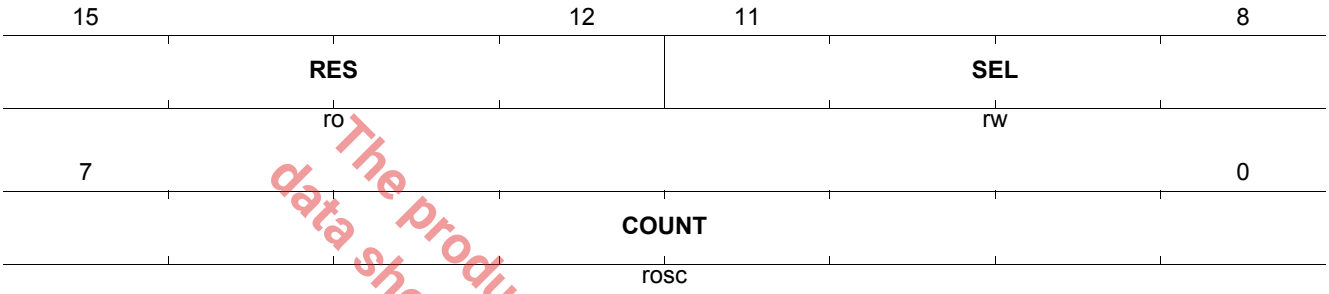

The product (or products) mentioned in this data sheet are no longer being manufactured and may not be ordered (OBS)

Field	Bits	Type	Description
RES	15:12	RO	**Reserved** Write as zero, ignored on read.
SEL	11:8	RW	**Select Error Event** Configures the error/event to which the error counter is sensitive. **Constants** 0000_B**RXERR** Receive errors are counted 0001_B**RXACT** Receive frames are counted 0010_B**ESDERR** ESD errors are counted 0011_B**SSDERR** SSD errors are counted 0100_B**TXERR** Transmit errors are counted 0101_B**TXACT** Transmit frames events get counted 0110_B**COL** Collision events get counted 1000_B**NLD** Number of Link Down get counted 1001_B**NDS** Number of auto-downspeed get counted *Note: RXERR and SSDERR values could be inaccurate when EEE is activated*
COUNT	7:0	ROSC	**Counter State** This counter state is updated each time the selected error event has been detected. The counter state is reset every time a read operation on this register is performed or the error event is changed. The counter saturates at value 0xFF.

EEPROM Control Register

This register controls the external EEPROM via indirect accesses in the MDIO address space. It can be used to perform read and write accesses to the external EEPROM connected to the PHY. The actual reset value of this register depends on the soft pin-strapping settings.

PHY_EECTRL	Offset	Reset Value
EEPROM Control Register	16_H	0000_H



Field	Bits	Type	Description
EESCAN	15	RW	**Enable/Disable EEPROM Configuration Scan Also After SW Reset.** **Constants** 0_B **DISABLE** EEPROM configuration scan is done only after hardware reset 1_B **ENABLE** EEPROM configuration scan is also done after software reset
EEAF	14	ROLH	**EEPROM Access Failure Indication** **Constants** 0_B **UNDETECTED** No EEPROM access error (read or write) has been detected 1_B **DETECTED** An EEPROM access error (read or write) has been detected
CSRDET	13	ROLH	**Configuration Signature Record Detect Indication** **Constants** 0_B **UNDETECTED** CSR has not been found 1_B **DETECTED** CSR has been detected
EEDET	12	ROLH	**EEPROM Detect Indication** **Constants** 0_B **UNDETECTED** No EEPROM is has been detected 1_B **DETECTED** An EEPROM is has been detected

The product (or products) mentioned in this data sheet are no longer being manufactured and may not be ordered (OBS)

Field	Bits	Type	Description
SIZE	11:8	RW	**EEPROM Size** Defines the size of the connected EEPROM. After reset, this register contains the size extracted from the soft pin-strapping. **Constants** 0000_B**SIZE1K** SIZE1K 0001_B**SIZE2K** SIZE2K 0010_B**SIZE4K** SIZE4K 0011_B**SIZE8K** SIZE8K 0100_B**SIZE16K** SIZE16K 0101_B**SIZE32K** SIZE32K 0110_B**SIZE64K** SIZE64K 0111_B**SIZE128K** SIZE128K 1000_B**SIZE256K** SIZE256K 1001_B**SIZE512K** SIZE512K 1010_B**SIZE1024K** SIZE1024K
ADRMODE	7	RW	**EEPROM Addressing Mode** Defines the device addressing mode of the connected EEPROM. After reset, this register contains the size extracted from the soft pin-strapping. **Constants** 0_B **MODE11** 11-bit addressing mode 1_B **MODE16** 16-bit addressing mode
DADR	6:4	RW	**EEPROM Device Address** Defines the device address of the connected EEPROM. After reset, this register contains the size extracted from the soft pin-strapping.
SPEED	3:2	RW	**EEPROM Speed** Defines the device address of the connected EEPROM. After reset, this register contains the size extracted from the soft pin-strapping. **Constants** 00_B **FRQ_100KHZ** EEPROM is accessed at 100 kHz 01_B **FRQ_400KHZ** EEPROM is accessed at 400 kHz 10_B **FRQ_1_0MHZ** EEPROM is accessed at 1 MHz 11_B **FRQ_3_4MHZ** EEPROM is accesses at 3.4 MHz
RDWR	1	RO	**EEPROM Read/Write Control** **Constants** 0_B **READ** Read access to the external EEPROM 1_B **WRITE** Write access to the external EEPROM
EXEC	0	RO	**Execute EEPROM Read/Write Control** This register is used to initiate an external EEPROM access. The bit remains set until the access is completed. **Constants** 0_B **IDLE** No access to the external EEPROM is currently pending 1_B **EXECUTE** Access to the external EEPROM is currently pending

The product(s) mentioned in this data sheet are no longer being manufactured and may not be ordered (OBS)

Media-Independent Interface Control

This register controls the MII interface in its various operational modes. The contents of this register reflects the options chosen by pinstrapping in the no-EEPROM mode. In this mode, writing to this register has no impact on operation of the device. In case the EEPROM mode is used, the registers content can be programmed by the user to alter the settings."

PHY_MIICTRL	Offset	Reset Value
Media-Independent Interface Control	17_H	8000_H

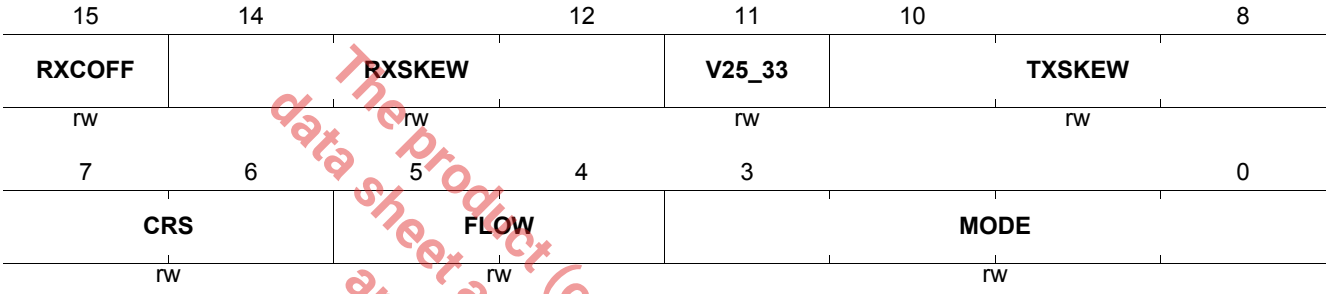

The product (or product(s) mentioned in this data sheet are no longer being manufactured and may not be ordered (OBS)

Field	Bits	Type	Description
RXCOFF	15	RW	**Receive Clock Control** Allows disabling of the RXCLK. **Constants** 0_B **OFF** RXCLK is inactive when link is down 1_B **ON** RXCLK is active also then link is down
RXSKEW	14:12	RW	**Receive Timing Skew (RGMII)** Defines the receive timing skew in the RGMII mode using the integrated delay generation on RX_CLK. Note that this register is subject to default reset values which depend on soft pin-strappings. **Constants** 000_B **SKEW_0N0** 0.0 ns timing skew 001_B **SKEW_0N5** 0.5 ns timing skew 010_B **SKEW_1N0** 1.0 ns timing skew 011_B **SKEW_1N5** 1.5 ns timing skew 100_B **SKEW_2N0** 2.0 ns timing skew 101_B **SKEW_2N5** 2.5 ns timing skew 110_B **SKEW_3N0** 3.0 ns timing skew 111_B **SKEW_3N5** 3.5 ns timing skew
V25_33	11	RW	**Power Supply Control for MII Pins** Required for standard compliant operation of RGMII. **Constants** 0_B **V33** MII is operated at 3.3 V 1_B **V25** MII is operated at 2.5 V

Field	Bits	Type	Description
TXSKEW	10:8	RW	**Transmit Timing Skew (RGMII)** Defines the transmit timing skew in the RGMII mode using the integrated delay generation on TX_CLK. Note that this register is subject to default reset values which depend on soft pin-strappings. **Constants** 000_B **SKEW_0N0** 0.0 ns timing skew 001_B **SKEW_0N5** 0.5 ns timing skew 010_B **SKEW_1N0** 1.0 ns timing skew 011_B **SKEW_1N5** 1.5 ns timing skew 100_B **SKEW_2N0** 2.0 ns timing skew 101_B **SKEW_2N5** 2.5 ns timing skew 110_B **SKEW_3N0** 3.0 ns timing skew 111_B **SKEW_3N5** 3.5 ns timing skew
CRS	7:6	RW	**CRS Sensitivity Configuration** **Constants** 00_B **TXRX_RX** HDX:TX+RX, FDX:RX 01_B **TXRX_0** HDX:TX+RX, FDX:0 10_B **RX_RX** HDX:RX, FDX:RX 11_B **RX_0** HDX:RX, FDX:0
FLOW	5:4	RW	**Data Flow Configuration** This register field controls the data flow of the Ethernet frames in the PHY. The MAC interface type is selected by MODE. **Constants** 00_B **COPPER** MAC interface to twisted-pair 01_B **FIBER** MAC interface to fiber 10_B **DUALMEDIA** MAC interface to dual-media: fiber OR copper 11_B **CONVERTER** Media converter: fiber to twisted-pair

The product(s) mentioned in this data sheet are no longer being manufactured and may not be ordered (OBS)

Field	Bits	Type	Description
MODE	3:0	RW	**MII Interface Mode** This register field controls the operation of the MII interface depending on the FLOW configuration. **Constants** (**FLOW = COPPER**) 0000_B**RGMII** RGMII mode 0001_B**SGMII** SGMII mode 0010_B**RMII** RMII mode, that is, link speed is forced to 10/100 Mbit/s only 0011_B**RES0** Reserved 0100_B**GMII** (G)MII mode, that is, MII in 10/100 Mbit/s and GMII in 1000 Mbit/s speed modes 0101_B**RES1** Reserved 0110_B**SGMII_NC** SGMII mode (without serial clock) 1111_B**TEST** Test Mode for SGMII (**FLOW = FIBER**) 0000_B**FIBER_RGMII** RGMII to 1000BASE-X, that is, link speed is forced to 1000 Mbit/s only 0001_B**FIBER_SGMII** Reserved 0010_B**FIBER_SGMII_NC** Reserved 0011_B**RES2** Reserved (**FLOW = DUALMEDIA**) 0000_B**DUAL_RGMII** RGMII to copper or fiber (1000BASE-X) 0001_B**DUAL_SGMII** Reserved 0010_B**DUAL_SGMII_NC** Reserved 0011_B**RES3** Reserved 0100_B**DUAL_RGMII_RGMII** Reserved 0111_B**DUAL_RGMII_MII_P** Reserved 0110_B**DUAL_RGMII_MII_M** Reserved (**FLOW = CONVERTER**) 0000_B**CONV_X2T1000** Convert 1000BASE-X (without ANEG) to 1000BASE-T. Continuous signal detection is needed to start ANEG on the 1000BASE-T interface. 0001_B**CONV_X2T1000A** Convert 1000BASE-X (with ANEG) to 1000BASE-T. Successful 1000BASE-X negotiation is needed to start ANEG on the 1000BASE-T interface.

The product (or products) mentioned in this data sheet are no longer being manufactured and may not be ordered (OBS)

Media-Independent Interface Status

This register contains status information of the MII interface.

PHY_MIISTAT	Offset	Reset Value
Media-Independent Interface Status	18_H	0000_H

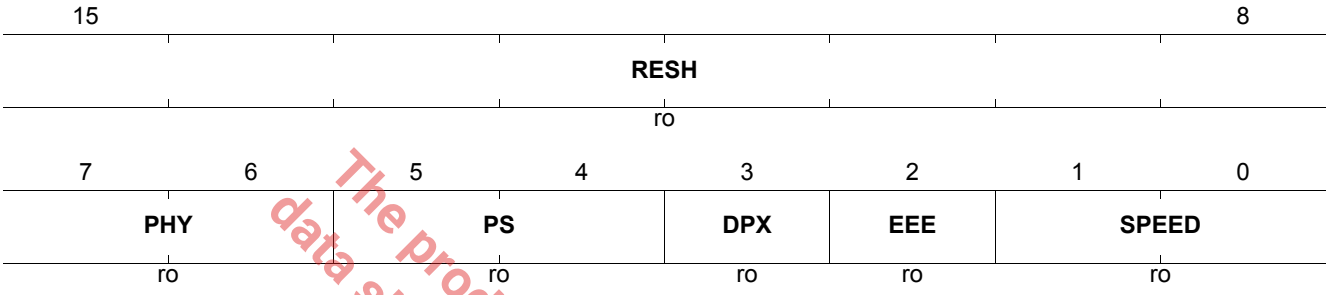

The product (or products) mentioned in this data sheet are no longer being manufactured and may not be ordered (OBS)

Field	Bits	Type	Description
RESH	15:8	RO	**Reserved** Write as zero, ignored on read.
PHY	7:6	RO	**Active PHY Interface.** **Constants** 00_B **TP** The twisted-pair interface is the active PHY interface 01_B **FIBER** The fiber interface is the active PHY interface 10_B **MII2** The second MII interface is the active PHY interface 11_B **SGMII** The SGMII interface is the active PHY interface
PS	5:4	RO	**Resolved Pause Status for Flow Control** **Constants** 00_B **NONE** No PAUSE 01_B **TX** Transmit PAUSE 10_B **RX** Receive PAUSE 11_B **TXRX** Both transmit and receive PAUSE
DPX	3	RO	**Duplex mode at which the MII currently operates.** **Constants** 0_B **HDX** Half duplex 1_B **FDX** Full duplex
EEE	2	RO	**Resolved Energy-Efficient Ethernet Mode** **Constants** 0_B **OFF** EEE is disabled after auto-negotiation resolution 1_B **ON** EEE is enabled after auto-negotiation resolution
SPEED	1:0	RO	**PHY Speed at which the MII Currently Operates** **Constants** 00_B **TEN** 10 Mbit/s 01_B **FAST** 100 Mbit/s 10_B **GIGA** 1000 Mbit/s 11_B **FRE** FRE mode

Interrupt Mask Register

This register defines the mask for the Interrupt Status Register (ISTAT). Each masked interrupt is able to activate the MDINT pin to the management device. The information about the interrupt source can be extracted by reading the ISTAT register. A read operation on the ISTAT register simultaneously clears the interrupts, deactivating MDINT.

PHY_IMASK	Offset	Reset Value
Interrupt Mask Register	19_H	0000_H

15	14	13	12	11	10	9	8
WOL	MSRE	NPRX	NPTX	ANE	ANC	RESH	
rw	rw	rw	rw	rw	rw	ro	

7	6	5	4	3	2	1	0
RESL		ADSC	MDIPC	MDIXC	DXMC	LSPC	LSTC
ro		rw	rw	rw	rw	rw	rw

Field	Bits	Type	Description
WOL	15	RW	**Wake-On-LAN Event Mask** When active and masked in IMASK, the MDINT is activated upon detection of a valid Wake-On-LAN event. **Constants** 0_B **INACTIVE** Interrupt is masked out 1_B **ACTIVE** Interrupt is activated
MSRE	14	RW	**Master/Slave Resolution Error Mask** When active, MDINT is activated upon detection of a master/slave resolution error during a 1000BASE-T auto-negotiation. **Constants** 0_B **INACTIVE** Interrupt is masked out 1_B **ACTIVE** Interrupt is activated
NPRX	13	RW	**Next Page Received Mask** When active, MDINT is activated upon reception of a next page in STD.AN_NPRX. **Constants** 0_B **INACTIVE** Interrupt is masked out 1_B **ACTIVE** Interrupt is activated
NPTX	12	RW	**Next Page Transmitted Mask** When active, MDINT is activated upon transmission of the currently stored next page in STD.AN_NPTX. **Constants** 0_B **INACTIVE** Interrupt is masked out 1_B **ACTIVE** Interrupt is activated

The product (or product(s) mentioned in this data sheet are no longer being manufactured and may not be ordered (OBS)

Field	Bits	Type	Description
ANE	11	RW	**Auto-Negotiation Error Mask** When active, MDINT is activated upon detection of an auto-negotiation error. **Constants** 0_B **INACTIVE** Interrupt is masked out 1_B **ACTIVE** Interrupt is activated
ANC	10	RW	**Auto-Negotiation Complete Mask** When active, MDINT is activated upon completion of the auto-negotiation process. **Constants** 0_B **INACTIVE** Interrupt is masked out 1_B **ACTIVE** Interrupt is activated
AMBF	9	RW	**MDIO Handling Fault** When active, MDINT is activated upon detection that the MDIO handling FIFO has overflowed and as such flushed and init by FW. This shall indicate that one or more of the MDIO transactions before this event may be lost. **Constants** 0_B **INACTIVE** Interrupt is masked out 1_B **ACTIVE** Interrupt is activated
LOR	8	RW	**SyncE Lost Of Reference** When active, MDINT is activated upon detection that the SyncE reference clock is lost. **Constants** 0_B **INACTIVE** Interrupt is masked out 1_B **ACTIVE** Interrupt is activated
RESL	7:6	RO	**Reserved** Write as zeroes, ignore on read.
ADSC	5	RW	**Link-Speed Auto-Downspeed Detect Mask** When active, MDINT is activated upon detection of a link speed auto-downspeed event. **Constants** 0_B **INACTIVE** Interrupt is masked out 1_B **ACTIVE** Interrupt is activated
MDIPC	4	RW	**MDI Polarity Change Detect Mask** When active, MDINT is activated upon detection of an MDI polarity change event. **Constants** 0_B **INACTIVE** Interrupt is masked out 1_B **ACTIVE** Interrupt is activated
MDIXC	3	RW	**MDIX Change Detect Mask** When active, MDINT is activated upon detection of an MDI/MDIX cross-over change event. **Constants** 0_B **INACTIVE** Interrupt is masked out 1_B **ACTIVE** Interrupt is activated

The product(or products) mentioned in this data sheet are not for being manufactured and may not be ordered (OBS)

Field	Bits	Type	Description
DXMC	2	RW	**Duplex Mode Change Mask** When active, MDINT is activated upon detection of full- or half-duplex change. **Constants** 0_B **INACTIVE** Interrupt is masked out 1_B **ACTIVE** Interrupt is activated
LSPC	1	RW	**Link Speed Change Mask** When active, MDINT is activated upon detection of link speed change. **Constants** 0_B **INACTIVE** Interrupt is masked out 1_B **ACTIVE** Interrupt is activated
LSTC	0	RW	**Link State Change Mask** When active, MDINT is activated upon detection of link status change. **Constants** 0_B **INACTIVE** Interrupt is masked out 1_B **ACTIVE** Interrupt is activated

The product(or products) mentioned in this data sheet are no longer being manufactured and may not be ordered (OBS)

Interrupt Status Register

This register defines the Interrupt Status Register (ISTAT). Each masked interrupt (IMASK) is able to activate the MDINT pin to the management device. The information about the interrupt source can be extracted by reading the ISTA register. A read operation on the ISTAT register simultaneously clears the interrupts and this deactivates MDINT.

PHY_ISTAT	Offset	Reset Value
Interrupt Status Register	$1A_H$	0000_H

15	14	13	12	11	10	9	8
WOL	MSRE	NPRX	NPTX	ANE	ANC	RESH	
rolh	rolh	rolh	rolh	rolh	rolh	rolh	

7	6	5	4	3	2	1	0
RESL		ADSC	MDIPC	MDIXC	DXMC	LSPC	LSTC
rolh		rolh	rolh	rolh	rolh	rolh	rolh

Field	Bits	Type	Description
WOL	15	ROLH	**Wake-On-LAN Interrupt Status** When active and masked in IMASK, the MDINT is activated upon detection of a valid Wake-On-LAN event. **Constants** 0_B **INACTIVE** Interrupt is masked out 1_B **ACTIVE** Interrupt is activated
MSRE	14	ROLH	**Master/Slave Resolution Error Interrupt Status** When active and masked in IMASK, the MDINT is activated upon detection of a master/slave resolution error during a 1000BASE-T auto-negotiation. **Constants** 0_B **INACTIVE** Interrupt is masked out 1_B **ACTIVE** Interrupt is activated
NPRX	13	ROLH	**Next Page Received Interrupt Status** When active and masked in IMASK, the MDINT is activated upon reception of a next page in STD.AN_NPRX. **Constants** 0_B **INACTIVE** Interrupt is masked out 1_B **ACTIVE** Interrupt is activated
NPTX	12	ROLH	**Next Page Transmitted Interrupt Status** When active and masked in IMASK, the MDINT is activated upon transmission of the currently stored next page in STD.AN_NPTX. **Constants** 0_B **INACTIVE** Interrupt is masked out 1_B **ACTIVE** Interrupt is activated

The product (or product(s) mentioned in this data sheet are no longer being manufactured and may not be ordered (OBS)

Field	Bits	Type	Description
ANE	11	ROLH	**Auto-Negotiation Error Interrupt Status** When active and masked in IMASK, the MDINT is activated upon detection of an auto-negotiation error. **Constants** 0_B **INACTIVE** Interrupt is masked out 1_B **ACTIVE** Interrupt is activated
ANC	10	ROLH	**Auto-Negotiation Complete Interrupt Status** When active and masked in IMASK, the MDINT is activated upon completion of the auto-negotiation process. **Constants** 0_B **INACTIVE** Interrupt is masked out 1_B **ACTIVE** Interrupt is activated
AMBF	9	RW	**MDIO Handling Fault** When active and masked in IMASK, MDINT is activated upon detection that the MDIO handling FIFO has overflowed and as such flushed and init by FW. This shall indicate that one or more of the MDIO transactions before this event may be lost. **Constants** 0_B **INACTIVE** Interrupt is masked out 1_B **ACTIVE** Interrupt is activated
LOR	8	ROLH	**SyncE Lost Of Reference** When active and masked in IMASK, MDINT is activated upon detection that the SyncE reference clock is lost. **Constants** 0_B **INACTIVE** Interrupt is masked out 1_B **ACTIVE** Interrupt is activated
RESL	7:6	ROLH	**Reserved** Write as zeroes, ignore on read.
ADSC	5	ROLH	**Link Speed Auto-Downspeed Detect Interrupt Status** When active and masked in IMASK, the MDINT is activated upon detection of a link speed auto-downspeed event. **Constants** 0_B **INACTIVE** Interrupt is masked out 1_B **ACTIVE** Interrupt is activated
MDIPC	4	ROLH	**MDI Polarity Change Detect Interrupt Status** When active and masked in IMASK, the MDINT is activated upon detection of an MDI polarity change event. **Constants** 0_B **INACTIVE** Interrupt is masked out 1_B **ACTIVE** Interrupt is activated
MDIXC	3	ROLH	**MDIX Change Detect Interrupt Status** When active and masked in IMASK, the MDINT is activated upon detection of an MDI/MDIX cross-over change event. **Constants** 0_B **INACTIVE** Interrupt is masked out 1_B **ACTIVE** Interrupt is activated

The product (or products) mentioned in this data sheet are no longer being manufactured and may not be ordered (OBS).

Field	Bits	Type	Description
DXMC	2	ROLH	**Duplex Mode Change Interrupt Status** When active and masked in IMASK, the MDINT is activated upon detection of a full or half-duplex change. **Constants** 0_B **INACTIVE** Interrupt is masked out 1_B **ACTIVE** Interrupt is activated
LSPC	1	ROLH	**Link Speed Change Interrupt Status** When active and masked in IMASK, the MDINT is activated upon detection of link speed change. **Constants** 0_B **INACTIVE** Interrupt is masked out 1_B **ACTIVE** Interrupt is activated
LSTC	0	ROLH	**Link State Change Interrupt Status** When active and masked in IMASK, the MDINT is activated upon detection of link status change. **Constants** 0_B **INACTIVE** Interrupt is masked out 1_B **ACTIVE** Interrupt is activated

The product(s) mentioned in this data sheet are no longer being manufactured and may not be ordered (OBS)

LED Control Register

This register contains control bits to allow for direct access to the LEDs. A directly controlled LED must disable the integrated LED function as specified by the more sophisticated LED control registers in page LED.

PHY_LED	Offset	Reset Value
LED Control Register	$1B_H$	$0F00_H$

15	14	13	12	11	10	9	8
LED3INV	LED2INV	LED1INV	LED0INV	LED3EN	LED2EN	LED1EN	LED0EN
rw	rw	rw	rw	rw	rw	rw	rw
7			4	3	2	1	0
RESL				LED3DA	LED2DA	LED1DA	LED0DA
ro				rw	rw	rw	rw

Field	Bits	Type	Description
LED3INV	15	RW	**Control LED3 polarirty** **Constants** 0_B **Active High** LED3 pin driven high when activated 1_B **Active Low** LED3 pin driven low when activated
LED2INV	14	RW	**Control LED2 polarity** **Constants** 0_B **Active High** LED2 pin driven high when activated 1_B **Active Low** LED2 pin driven low when activated
LED1INV	13	RW	**Control LED1 polarity** **Constants** 0_B **Active High** LED1 pin driven high when activated 1_B **Active Low** LED1 pin driven low when activated
LED0INV	12	RW	**Control LED0 polarity** **Constants** 0_B **Active High** LED0 pin driven high when activated 1_B **Active Low** LED0 pin driven low when activated
LED3EN	11	RW	**Enable the integrated function of LED3** Write a logic 0 to this bit to disable the pre-configured integrated function for this LED. The LED remains off unless directly accessed via LED3DA. **Constants** 0_B **DISABLE** Disables the integrated LED function 1_B **ENABLE** Enables the integrated LED function
LED2EN	10	RW	**Enable the integrated function of LED2** Write a logic 0 to this bit to disable the pre-configured integrated function for this LED. The LED remains off unless directly accessed via LED2DA. **Constants** 0_B **DISABLE** Disables the integrated LED function 1_B **ENABLE** Enables the integrated LED function

The product (or products) mentioned in this data sheet are no longer being manufactured and may not be ordered (OBS).

Field	Bits	Type	Description
LED1EN	9	RW	**Enable the Integrated Function of LED1** Write a logic 0 to this bit to disable the pre-configured integrated function for this LED. The LED remains off unless directly accessed via LED1DA. **Constants** 0_B **DISABLE** Disables the integrated LED function 1_B **ENABLE** Enables the integrated LED function
LED0EN	8	RW	**Enable the Integrated Function of LED0** Write a logic 0 to this bit to disable the pre-configured integrated function for this LED. The LED remains off unless directly accessed via LED0DA. **Constants** 0_B **DISABLE** Disables the integrated LED function 1_B **ENABLE** Enables the integrated LED function
RESL	7:4	RO	**Reserved** Write as zero, ignored on read.
LED3DA	3	RW	**Direct Access to LED3** Write a logic 1 to this bit to illuminate the LED. Note that LED3EN must be set to logic zero. **Constants** 0_B **OFF** Switch off the LED 1_B **ON** Switch on the LED
LED2DA	2	RW	**Direct Access to LED2** Write a logic 1 to this bit to illuminate the LED. Note that LED2EN must be set to logic zero. **Constants** 0_B **OFF** Switch off the LED 1_B **ON** Switch on the LED
LED1DA	1	RW	**Direct Access to LED1** Write a logic 1 to this bit to illuminate the LED. Note that LED1EN must be set to logic zero. **Constants** 0_B **OFF** Switch off the LED 1_B **ON** Switch on the LED
LED0DA	0	RW	**Direct Access to LED0** Write a logic 1 to this bit to illuminate the LED. Note that LED0EN must be set to logic zero. **Constants** 0_B **OFF** Switch off the LED 1_B **ON** Switch on the LED

The product(s) mentioned in this data sheet are no longer being manufactured and may not be ordered (OBS)

Test-Packet Generator Control

This register controls the operation of the integrated Test-Packet Generator (TPG). Note that this module is only used for testing purposes.

PHY_TPGCTRL	Offset	Reset Value
Test-Packet Generator Control	$1C_H$	0000_H

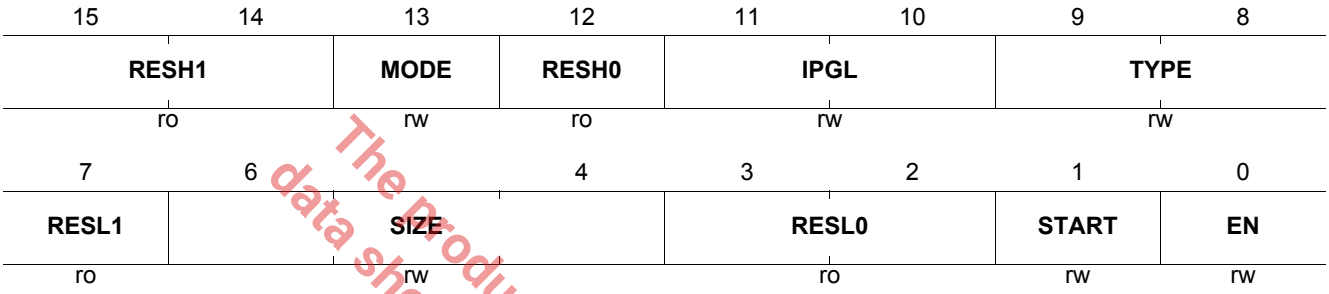

Field	Bits	Type	Description
CHSEL	15:14	RW	**Channel Selection** There are 4 channels in the IP which can be selected for debug data dumping. Note that this field is not used in case BURST4EN=1 && MOPT=1 (auto-channel burst). **Constants** 00_B **CHA** Channel A is selected 01_B **CHB** Channel B is selected 10_B **CHC** Channel C is selected 11_B **CHD** Channel D is selected
MODE	13	RW	**Mode of the TPG** Configures the packet generation mode **Constants** 0_B **CONTINUOUS** Send packets continuously 1_B **SINGLE** Send a single packet. Also used to send a single burst of 4 packets in debug dumping when selected.
BURST4EN	12	RW	**Burst Of 4 packets Enable** When Enabled, this indicates to the packet generator to auto-select based on MOPT the debug data configuration per packet in the burst of 4. when MOPT=0, then the packets will be generated capturing for the selected ASP channel, the polyphases 0,1,2,3 respectively. When MOPT=1, then the packets will be generated capturing for the selected DVC option, the channels A,B,C,D respectively. Note that this will lead to a burst of 4 packets if MODE=SINGLE. In case MODE=1(continuous), then we will get packets where every group of 4 packets are generated according to the MOPT selection. **Constants** 0_B **DISABLE** Disable 1_B **ENABLE** Enable Burst of 4 packet generation

The Product (or products) mentioned in this data sheet are no longer being manufactured and may not be ordered (OBS)

Field	Bits	Type	Description
IPGL	11:10	RW	**Inter-Packet Gap Length** Configures the length of the inter-packet gap in bit times. **Constants** 00_B **BT48** Length is 48 bit times 01_B **BT96** Length is 96 bit times 10_B **BT960** Length is 960 bit times 11_B **BT9600** Length is 9600 bit times
TYPE	9:8	RW	**Packet Data Type** Configures the packet data type to be either predefined, byte increment or random. If pre-defined, the content of the register TPGDATA is used repetitively. **Constants** 00_B **RANDOM** Use random data as the packet content 01_B **BYTEINC** Use byte increment as the packet content 10_B **PREDEF** Use pre-defined content of the register TPGDATA 11_B **DBGDATA** Use Dbg data as packet content. Additional Configuration will be taken from TPGDATA
RESL1	7	RO	**Reserved.** Write as zero, ignore on read.
SIZE	6:4	RW	**Packet Size** Configures the size of the generated Ethernet packets in bytes. The size includes DA, SA, length/type, payload and FCS. **Constants** 000_B **L64** Packet length is 64 bytes. 001_B **L2048** Packet length is 2048 bytes (jumbo frames). 010_B **L256** Packet length is 256 bytes. 011_B **L4096** Packet length is 4096 bytes (jumbo frames). 100_B **L1024** Packet length is 1024 bytes. 101_B **L1518** Packet length is 1518 bytes. 110_B **L9000** Packet length is 9000 bytes (jumbo frames). 111_B **RANDOM** Packet length is randomized between upper sizes without jumbo frames.
MOPT	3:2	RW	**Mux Option** Additional Mux Selection Options depending on the value of DVC in TPGDATA[3:0] **Constants** 00_B **MOPT0** BURST4EN=1: auto-polyphase selected, BURST4EN=0 && DVC=0b1001: DBG SYNC Data Gen, otherwise sub-DVC-mode selection 01_B **MOPT1** BURST4EN=1: auto-channel selected, BURST4EN=0 && DVC=0b1001: DBG Trace Data, otherwise sub-DVC-mode selection 10_B **MOPT2** sub-DVC-mode selection 11_B **MOPT3** sub-DVC-mode selection

The product(s) mentioned in this data sheet are no longer being manufactured and may not be ordered (OBS)

Field	Bits	Type	Description
START	1	RW	**Start or Stop TPG Data Generation.** Starts the TPG data generation. Depending on the MODE, the TPG sends only 1 single packet or chunks of 10,000 packets until stopped. **Constants** 0_B **STOP** Stops the TPG data generation 1_B **START** Starts the TPG data generation
EN	0	RW	**Enable the TPG** Enables the TPG for data generation. **Constants** 0_B **DISABLE** Disables the TPG 1_B **ENABLE** Enables the TPG

The product (or products) mentioned in this data sheet are no longer being manufactured and may not be ordered (OBS)

Test-Packet Generator Data

Specifies the payload data to be used when sending a non-random data packet. All payload data bytes are sent with this value.

PHY_TPGDATA	Offset	Reset Value
Test-Packet Generator Data	$1D_H$	$00AA_H$

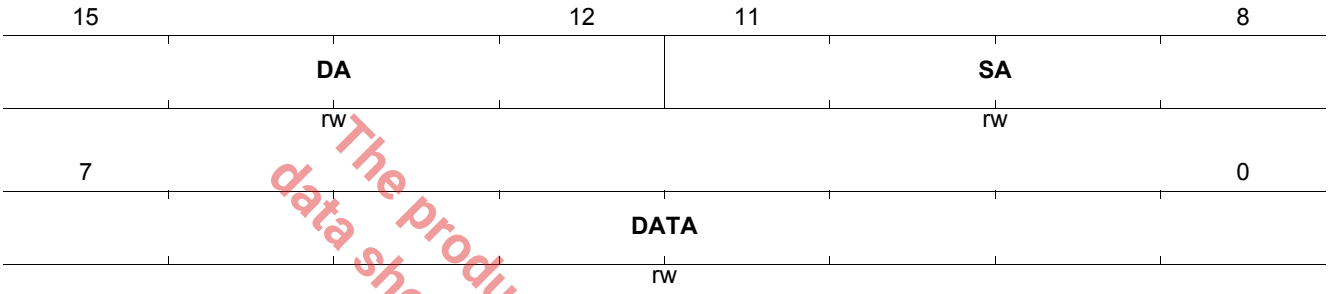

Field	Bits	Type	Description
DA	15:12	RW	**Destination Address** Configures the destination address nibble. The Source Address builds up to 00-03-19-FF-FF-F[DA].
SA	11:8	RW	**Source Address** Configures the source address nibble. The source address builds up to 00-03-19-FF-FF-F[SA].
DATA	7:0	RW	**Data Byte to be Transmitted** This is the content of the payload bytes in the frame.

The product (or products) mentioned in this data sheet are no longer being manufactured and may not be ordered (OBS)

Firmware Version Register

This register contains the version of the PHY firmware.

PHY_FWV	Offset	Reset Value
Firmware Version Register	$1E_H$	8435_H

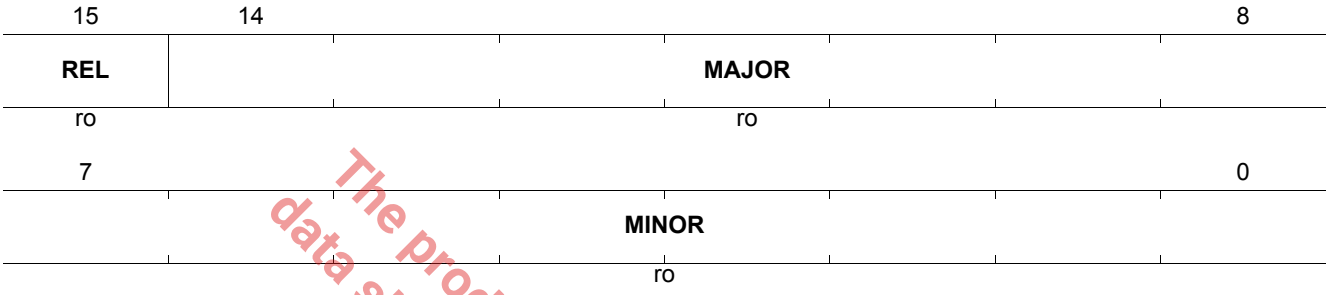

Field	Bits	Type	Description
REL	15	RO	**Release Indication** This parameter indicates either a test or a release version. **Constants** 0_B **TEST** Indicates a test version 1_B **RELEASE** Indicates a released version
MAJOR	14:8	RO	**Major Version Number** Specifies the main version release number of the firmware.
MINOR	7:0	RO	**Minor Version Number** Specifies the sub-version release number of the firmware.

The product (or product(s) mentioned in this data sheet are no longer being manufactured and may not be ordered (OBS)

Reserved

Reserved for future use.

PHY_RES1F	Offset	Reset Value
Reserved	$1F_H$	0000_H

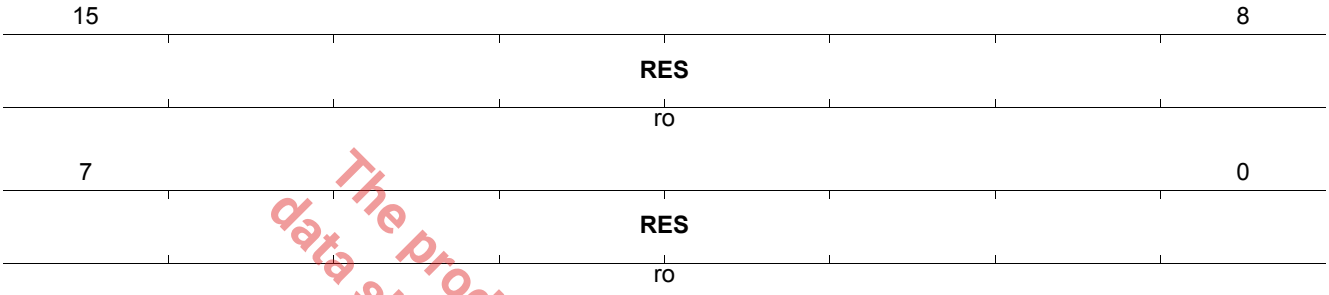

Field	Bits	Type	Description
RES	15:0	RO	**Reserved** Write as zero, ignored on read.

The product (or products) mentioned in this data sheet are no longer being manufactured and may not be ordered (OBS)

5 MMD Registers

This chapter defines all the registers needed to operate the module "MMD_REGISTERS".[1)]

Table 36 Registers Address Space

Module	Base Address	End Address	Note
MMD_REGISTERS	000000_H	$1FFFFF_H$	

Table 37 Registers Overview

Register Short Name	Register Long Name	Offset Address	Page Number
MMD Registers, EEE: Standard EEE Registers for MMD=0x03			
EEE_CTRL1	EEE Control Register 1	03.0000_H	144
EEE_STAT1	EEE Status Register 1	03.0001_H	145
EEE_CAP	EEE Capability Register	03.0014_H	146
EEE_WAKERR	EEE Wake Time Fault Count Register 1	03.0016_H	147
MMD Registers, ANEG: Standard Auto-Negotiation Registers for MMD=0x07			
EEE_AN_ADV	EEE Auto-Negotiation Advertisement Register	$07.003C_H$	148
EEE_AN_LPADV	EEE Auto-Negotiation Link-Partner Advertisement Register	$07.003D_H$	149
MMD Registers, EEPROM: EEPROM Address Space (MMD=0x1E)			
EEPROM	EEPROM Content	$1E.0000_H$-$1EFFFF_H$	151
MMD Registers, INTERNAL: Internal Address Space (MMD=0x1F)			
LEDCH	LED Configuration	$1F.01E0_H$	152
LEDCL	LED Configuration	$1F.01E1_H$	154
LED0H	Configuration for LED Pin 0	$1F.01E2_H$	156
LED0L	Configuration for LED Pin 0	$1F.01E3_H$	158
EEE_RXERR_LINK_FAIL_H	High Byte of the EEE Link-Fail Counter	$1F.01EA_H$	160
EEE_RXERR_LINK_FAIL_L	Low Byte of the EEE Link-Fail Counter	$1F.01EB_H$	160
WOLCTRL	Wake-On-LAN Control Register	$1F.0781_H$	161
WOLAD0	Wake-On-LAN Address Byte 0	$1F.0783_H$	162
WOLPW0	Wake-On-LAN SecureON Password Byte 0	$1F.0789_H$	163
LED1H	Configuration for LED Pin 1	$1F.01E4_H$	157
LED2H	Configuration for LED Pin 2	$1F.01E6_H$	157
LED3H	Configuration for LED Pin 3	$1F.01E8_H$	157
LED1L	Configuration for LED Pin 1	$1F.01E5_H$	159
LED2L	Configuration for LED Pin 2	$1F.01E7_H$	159
LED3L	Configuration for LED Pin 3	$1F.01E9_H$	159

The Product (or products) mentioned in this data sheet are no longer being manufactured and may not be ordered (OBS)

1) Generated by REFIGE v1.4 - Beta Release XIV

Table 37 Registers Overview (cont'd)

Register Short Name	Register Long Name	Offset Address	Page Number
WOLAD1	Wake-On-LAN Address Byte 1	$1F.0784_H$	162
WOLAD2	Wake-On-LAN Address Byte 2	$1F.0785_H$	162
WOLAD3	Wake-On-LAN Address Byte 3	$1F.0786_H$	162
WOLAD4	Wake-On-LAN Address Byte 4	$1F.0787_H$	162
WOLAD5	Wake-On-LAN Address Byte 5	$1F.0788_H$	162
WOLPW1	Wake-On-LAN SecureON Password Byte 1	$1F.078A_H$	163
WOLPW2	Wake-On-LAN SecureON Password Byte 2	$1F.078B_H$	163
WOLPW3	Wake-On-LAN SecureON Password Byte 3	$1F.078C_H$	163
WOLPW4	Wake-On-LAN SecureON Password Byte 4	$1F.078D_H$	163
WOLPW5	Wake-On-LAN SecureON Password Byte 5	$1F.078E_H$	163

The register is addressed wordwise.

Table 38 Register Access Types

Mode	Symbol
Status Register, Latch-High	ROLH
Status Register, Latch-Low	ROLL
Status Register, Self-Clearing	ROSC
Read-Write Register	RW
Read-Write Register, Self-Clearing	RWSC
Status Register	RO

The Product (or products) mentioned in this data sheet are no longer being manufactured and may not be ordered (OBS)

5.1 EEE: Standard EEE Registers for MMD=0x03

This section describes the EEE registers for MMD device 0x03.

EEE Control Register 1

EEE Control Register 1.

EEE_CTRL1	Offset	Reset Value
EEE Control Register 1	03.0000_H	0000_H

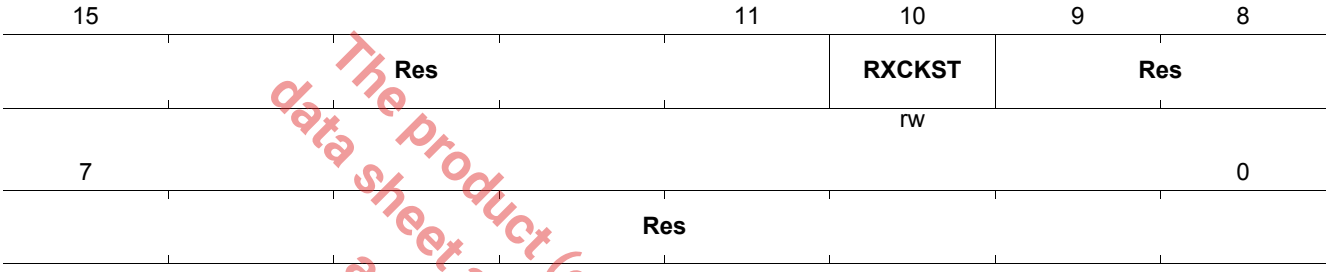

Field	Bits	Type	Description
RXCKST	10	RW	**Receive Clock Stoppable** The MAC can set this bit to active to allow the PHY to stop the clocking during the LPI_MODE. **Constants** 0_B **DISABLE** The PHY must not stop the xMII clock during LPI_MODE 1_B **ENABLE** The PHY can stop the xMII clock during LPI_MODE

The product (or products) mentioned in this data sheet are no longer being manufactured and may not be ordered (OBS)

EEE Status Register 1

EEE Status Register 1.

EEE_STAT1	Offset	Reset Value
EEE Status Register 1	03.0001_H	0000_H

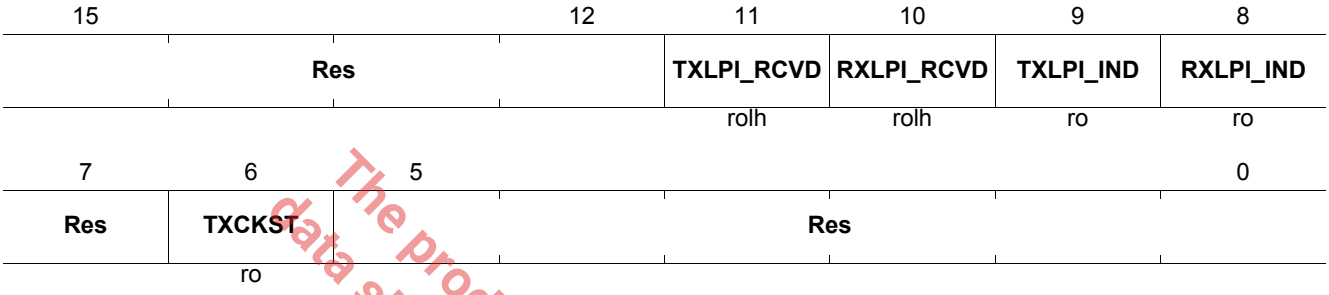

The product (or products) mentioned in this data sheet are no longer being manufactured and may not be ordered (OBS)

Field	Bits	Type	Description
TXLPI_RCVD	11	ROLH	**TXLPI Has Been Received** **Constants** 0_B **INACTIVE** LPI has not been received 1_B **ACTIVE** LPI has been received
RXLPI_RCVD	10	ROLH	**RXLPI Has Been Received** **Constants** 0_B **INACTIVE** LPI has not been received 1_B **ACTIVE** LPI has been received
TXLPI_IND	9	RO	**TXLPI Indication** **Constants** 0_B **INACTIVE** LPI is currently inactive 1_B **ACTIVE** LPI is currently active
RXLPI_IND	8	RO	**RXLPI Has Been Received** **Constants** 0_B **INACTIVE** LPI is currently inactive 1_B **ACTIVE** LPI is currently active
TXCKST	6	RO	**Transmit Clock Stoppable** Indicate whether PHY is able to accept a stopped transmit clock during LPI_MODE. MAC may choose to stop the clocking during LPI_MODE if this bit is set to active. **Constants** 0_B **DISABLE** The PHY is not able to accept stopped transmit clocks(default) 1_B **ENABLE** The PHY is able to accept a stopped transmit clock during LPI_MODE

EEE Capability Register

This register is used to indicate the capability of the PCS to support EEE functions for each PHY type.

EEE_CAP	Offset	Reset Value
EEE Capability Register	03.0014_H	0006_H

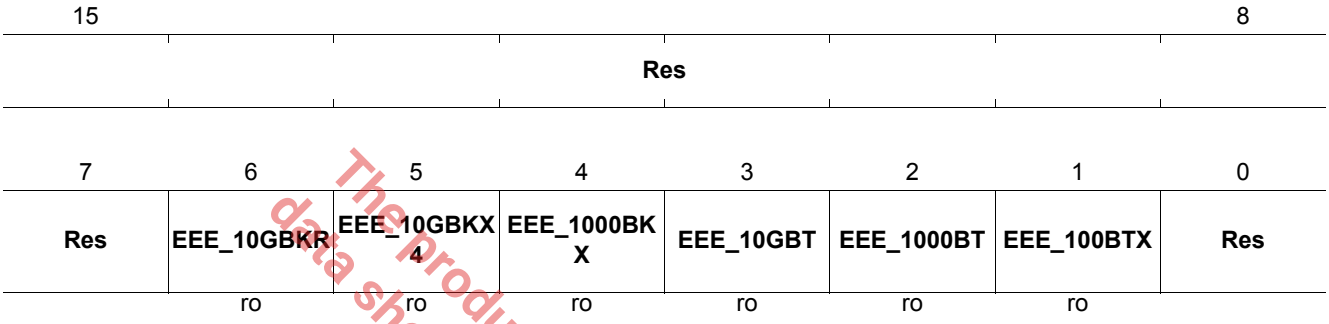

Field	Bits	Type	Description
EEE_10GBKR	6	RO	**Support of 10GBASE-KR EEE** **Constants** 0_B **DISABLED** This PHY mode is not supported for EEE 1_B **ENABLE** This PHY mode is supported for EEE
EEE_10GBKX4	5	RO	**Support of 10GBASE-KX4 EEE** **Constants** 0_B **DISABLED** This PHY mode is not supported for EEE 1_B **ENABLE** This PHY mode is supported for EEE
EEE_1000BKX	4	RO	**Support of 1000BASE-KX EEE** **Constants** 0_B **DISABLED** This PHY mode is not supported for EEE 1_B **ENABLE** This PHY mode is supported for EEE
EEE_10GBT	3	RO	**Support of 10GBASE-T EEE** **Constants** 0_B **DISABLED** This PHY mode is not supported for EEE 1_B **ENABLE** This PHY mode is supported for EEE
EEE_1000BT	2	RO	**Support of 1000BASE-T EEE** **Constants** 0_B **DISABLED** This PHY mode is not supported for EEE 1_B **ENABLE** This PHY mode is supported for EEE
EEE_100BTX	1	RO	**Support of 100BASE-TX EEE** **Constants** 0_B **DISABLED** This PHY mode is not supported for EEE 1_B **ENABLE** This PHY mode is supported for EEE

The product (or products) mentioned in this data sheet are no longer being manufactured and may not be ordered (OBS)

EEE Wake Time Fault Count Register 1

EEE Wake Time Fault Count Register.

EEE_WAKERR	Offset	Reset Value
EEE Wake Time Fault Count Register 1	03.0016_H	0000_H

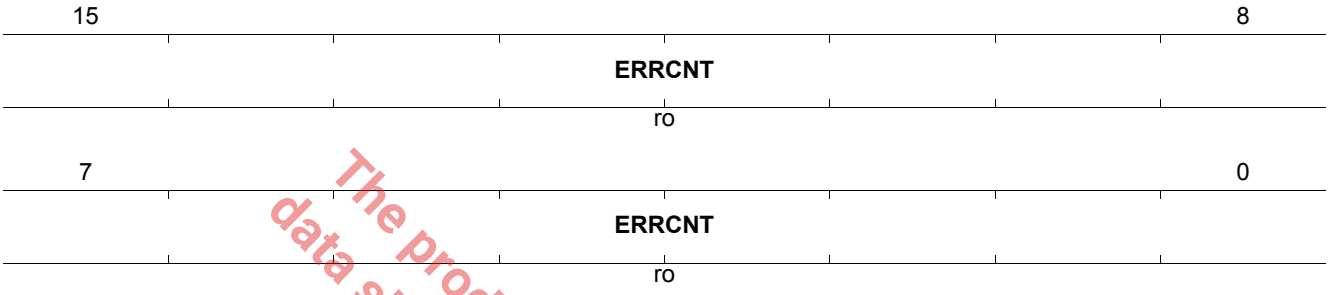

Field	Bits	Type	Description
ERRCNT	15:0	RO	**TXLPI Has Been Received** This register is used by PHY types that support EEE to count wake time faults where the PHY fails to complete its normal wake sequence within the time required for the specific PHY type. The definition of the fault event to be counted is defined for each PHY and may occur during a refresh or a wake-up as defined by the PHY. This 16-bit counter is reset to all zeroes when the EEE wake error counter is read by the management function or upon execution of the PCS reset. It is held at all ones in case of overflow.

The product (or product(s) mentioned in this data sheet are no longer being manufactured and may not be ordered (OBS)

5.2 ANEG: Standard Auto-Negotiation Registers for MMD=0x07

This register file contains the auto-negotiation registers for MMD device 0x07 (only supporting EEE specifics).

EEE Auto-Negotiation Advertisement Register

This register defines the EEE advertisement that is sent in the unformatted next page following an EEE technology message code as defined in 28C.12. The 11 bits (7.60.10 to 7.60.0) in the EEE advertisement register correspond to the bits in the unformatted next page. For PHYs that negotiate extended next-page support, the 11 bits (7.60.10 to 7.60.0) in the EEE advertisement register correspond to bits U10 to U0 respectively of the extended next-page unformatted code field.

EEE_AN_ADV — **EEE Auto-Negotiation Advertisement Register**

Offset $07.003C_H$

Reset Value 0000_H

15	14	13	12	11	10	9	8
Res							

7	6	5	4	3	2	1	0
Res	EEE_10GBKR	EEE_10GBKX4	EEE_1000BKX	EEE_10GBT	EEE_1000BT	EEE_100BTX	Res
	ro	ro	ro	ro	rw	rw	

The product (or products) mentioned in this data sheet are no longer being manufactured and may not be ordered (OBS)

Field	Bits	Type	Description
EEE_10GBKR	6	RO	**Support of 10GBASE-KR EEE** **Constants** 0_B **DISABLED** This PHY mode is not supported for EEE 1_B **ENABLE** This PHY mode is supported for EEE
EEE_10GBKX4	5	RO	**Support of 10GBASE-KX4 EEE** **Constants** 0_B **DISABLED** This PHY mode is not supported for EEE 1_B **ENABLE** This PHY mode is supported for EEE
EEE_1000BKX	4	RO	**Support of 1000BASE-KX EEE** **Constants** 0_B **DISABLED** This PHY mode is not supported for EEE 1_B **ENABLE** This PHY mode is supported for EEE
EEE_10GBT	3	RO	**Support of 10GBASE-T EEE** **Constants** 0_B **DISABLED** This PHY mode is not supported for EEE 1_B **ENABLE** This PHY mode is supported for EEE
EEE_1000BT	2	RW	**Support of 1000BASE-T EEE** **Constants** 0_B **DISABLED** This PHY mode is not supported for EEE 1_B **ENABLE** This PHY mode is supported for EEE

Field	Bits	Type	Description
EEE_100BTX	1	RW	**Support of 100BASE-TX EEE** **Constants** 0_B **DISABLED** This PHY mode is not supported for EEE 1_B **ENABLE** This PHY mode is supported for EEE

EEE Auto-Negotiation Link-Partner Advertisement Register

All of the bits in the EEE LP advertisement register are read only. A write operation to the EEE LP advertisement register has no effect. After the AN process has been completed, this register reflects the contents of the link partner's EEE advertisement register. The definitions are the same as for the EEE AN advertisement register.

EEE_AN_LPADV — **EEE Auto-Negotiation Link-Partner Advertisement Register**

Offset $07.003D_H$

Reset Value 0000_H

15	14	13	12	11	10	9	8
Res							

7	6	5	4	3	2	1	0
Res	EEE_10GBKR	EEE_10GBKX4	EEE_1000BKX	EEE_10GBT	EEE_1000BT	EEE_100BTX	Res
	ro	ro	ro	ro	ro	ro	

Field	Bits	Type	Description
EEE_10GBKR	6	RO	**Support of 10GBASE-KR EEE** **Constants** 0_B **DISABLED** This PHY mode is not supported for EEE 1_B **ENABLE** This PHY mode is supported for EEE
EEE_10GBKX4	5	RO	**Support of 10GBASE-KX4 EEE** **Constants** 0_B **DISABLED** This PHY mode is not supported for EEE 1_B **ENABLE** This PHY mode is supported for EEE
EEE_1000BKX	4	RO	**Support of 1000BASE-KX EEE** **Constants** 0_B **DISABLED** This PHY mode is not supported for EEE 1_B **ENABLE** This PHY mode is supported for EEE
EEE_10GBT	3	RO	**Support of 10GBASE-T EEE** **Constants** 0_B **DISABLED** This PHY mode is not supported for EEE 1_B **ENABLE** This PHY mode is supported for EEE
EEE_1000BT	2	RO	**Support of 1000BASE-T EEE** **Constants** 0_B **DISABLED** This PHY mode is not supported for EEE 1_B **ENABLE** This PHY mode is supported for EEE

The product (or products) mentioned in this data sheet are no longer being manufactured and may not be ordered (OBS)

Field	Bits	Type	Description
EEE_100BTX	1	RO	**Support of 100BASE-TX EEE** **Constants** 0_B **DISABLED** This PHY mode is not supported for EEE 1_B **ENABLE** This PHY mode is supported for EEE

The product (or products) mentioned in this data sheet are no longer being manufactured and may not be ordered (OBS)

5.3 EEPROM: EEPROM Address Space (MMD=0x1E)

This register file contains the EEPROM address space (MMD=0x1E).

EEPROM Content (Memory)

The EEPROM is indirectly addressable via MMD 0x1E.

EEPROM	Offset	Reset Value
EEPROM Content	$1E.0000_H$...1 $EFFFF_H$	-

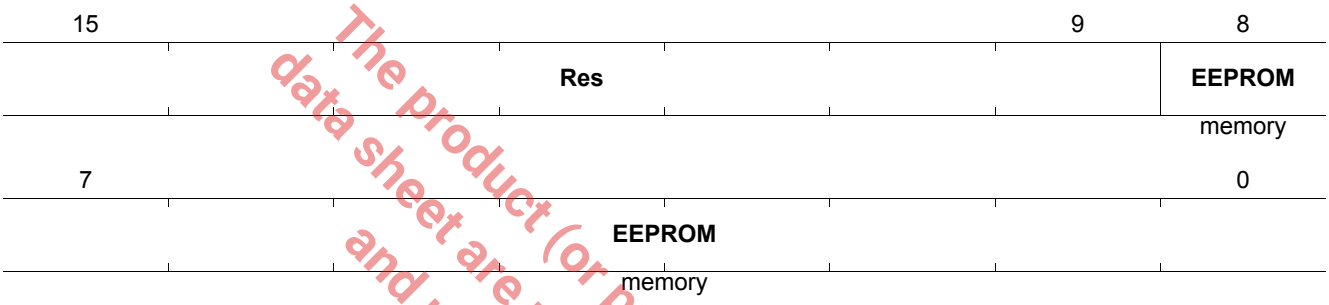

Field	Bits	Type	Description
EEPROM	8:0	Memory	**EEPROM Content** The EEPROM is indirectly addressable via MMD 0x1E.

The product (or products) mentioned in this data sheet are no longer being manufactured and may not be ordered (OBS)

5.4 INTERNAL: Internal Address Space (MMD=0x1F)

This register file contains the PHY internal address space (MMD=0x1F).

LED Configuration

This register must be used to configure the complex functions of the LED behavior. Complex functions are of a higher priority than direct LED functions as of registers MMD.INTERNAL.LEDxH/L. When the PHY enters a state which is defined to activate complex LED functions, all LEDs are controlled according to the type of the complex function.

LEDCH **Offset** **Reset Value**

LED Configuration **1F.01E0$_H$** **00C5$_H$**

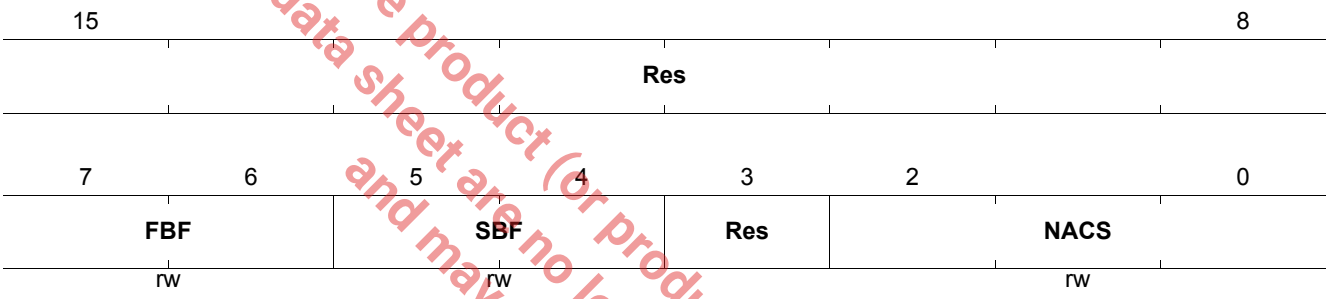

The product (or products) mentioned in this data sheet are no longer being manufactured and may not be ordered (OBS)

Field	Bits	Type	Description
FBF	7:6	RW	**Fast Blink Frequency** This register must be used to configure the fast-blinking frequency. Note that this setting implicitly defines the pulse-stretching width. **Constants** 00_B **F02HZ** 2 Hz blinking frequency 01_B **F04HZ** 4 Hz blinking frequency 10_B **F08HZ** 8 Hz blinking frequency 11_B **F16HZ** 16 Hz blinking frequency
SBF	5:4	RW	**Slow Blink Frequency** This register must be used to configure the slow-blinking frequency. **Constants** 00_B **F02HZ** 2 Hz blinking frequency 01_B **F04HZ** 4 Hz blinking frequency 10_B **F08HZ** 8 Hz blinking frequency 11_B **F16HZ** 16 Hz blinking frequency

Field	Bits	Type	Description
NACS	2:0	RW	**Inverse of SCAN Function** This configuration defines in which state the "complex SCAN" should be activated. The complex SCAN performs running off which turns back and forth between the first and last LED. The speed is dependent on the MMD.INTERNAL.LEDCH.FBF setting. **Constants** 000_B **NONE** No Function 001_B **LINK** Complex function enabled when link is up 010_B **PDOWN** Complex function enabled when device is powered-down 011_B **EEE** Complex function enabled when device is in EEE mode 100_B **ANEG** Complex function enabled when auto-negotiation is running 101_B **ABIST** Complex function enabled when analog self-test is running 110_B **CDIAG** Complex function enabled when cable diagnostics are running 111_B **TEST** Complex function enabled when test mode is running

The product (or products) mentioned in this data sheet are no longer being manufactured and may not be ordered (OBS)

LED Configuration

The register must be used to configure the complex functions of the LED behavior. Complex functions are of a higher priority than direct LED functions as of registers MMD.INTERNAL.LEDxH/L. When the PHY enters a state which is defined to activate complex LED functions all LEDs are controlled according to the type of the complex function.

LEDCL	Offset	Reset Value
LED Configuration	$1F.01E1_H$	0067_H

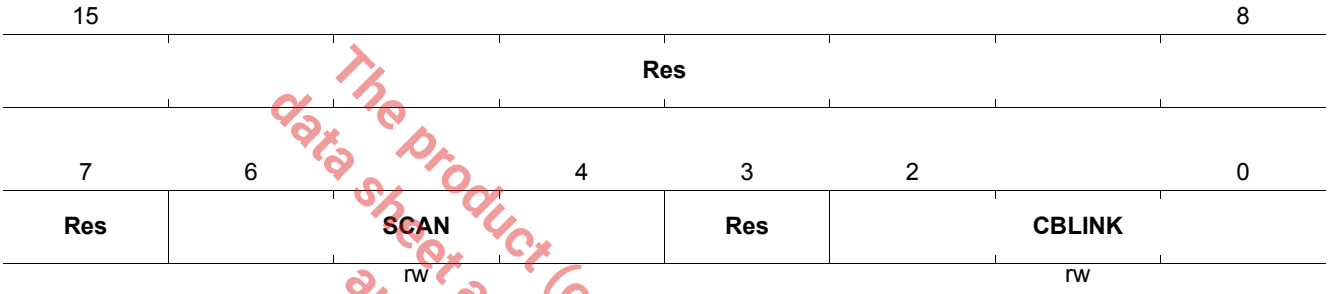

Field	Bits	Type	Description
SCAN	6:4	RW	**Complex SCAN Configuration** This configuration defines in which state the "complex SCAN" should be activated. The complex SCAN performs running on which turns back and forth between the first and last LED. The speed is dependent on the MMD.INTERNAL.LEDCH.FBF setting. **Constants** 000_B **NONE** No Function 001_B **LINK** Complex function enabled when link is up 010_B **PDOWN** Complex function enabled when device is powered-down 011_B **EEE** Complex function enabled when device is in EEE mode 100_B **ANEG** Complex function enabled when auto-negotiation is running 101_B **ABIST** Complex function enabled when analog self-test is running 110_B **CDIAG** Complex function enabled when cable diagnostics are running 111_B **TEST** Complex function enabled when test mode is running

The product (or product(s) mentioned in this data sheet are no longer being manufactured and may not be ordered (OBS)

Field	Bits	Type	Description
CBLINK	2:0	RW	**Complex Blinking Configuration** This configuration defines in which state the "complex blinking" should be activated. The complex blinking performs a blinking at the fast-blinking frequency on all LEDs simultaneously. This function can be used to indicate a special mode of the PHY such as cable-diagnostics or test. The speed is dependent on the MMD.INTERNAL.LEDCH.FBF setting. **Constants** 000_B **NONE** No Function 001_B **LINK** Complex function enabled when link is up 010_B **PDOWN** Complex function enabled when device is powered-down 011_B **EEE** Complex function enabled when device is in EEE mode 100_B **ANEG** Complex function enabled when auto-negotiation is running 101_B **ABIST** Complex function enabled when analog self-test is running 110_B **CDIAG** Complex function enabled when cable diagnostics are running 111_B **TEST** Complex function enabled when test mode is running

The product (or products) mentioned in this data sheet are no longer being manufactured and may not be ordered (OBS)

Configuration for LED Pin 0

This register configures the behavior of the LED depending on pre-defined states or events the PHY has entered into or raised. Since more than one event/state can be active at the same time, more than one function might apply simultaneously. The priority from highest to lowest is given by the order PULSE, BLINKS, BLINKF, CON.

LED0H	Offset	Reset Value
Configuration for LED Pin 0	$1F.01E2_H$	0070_H

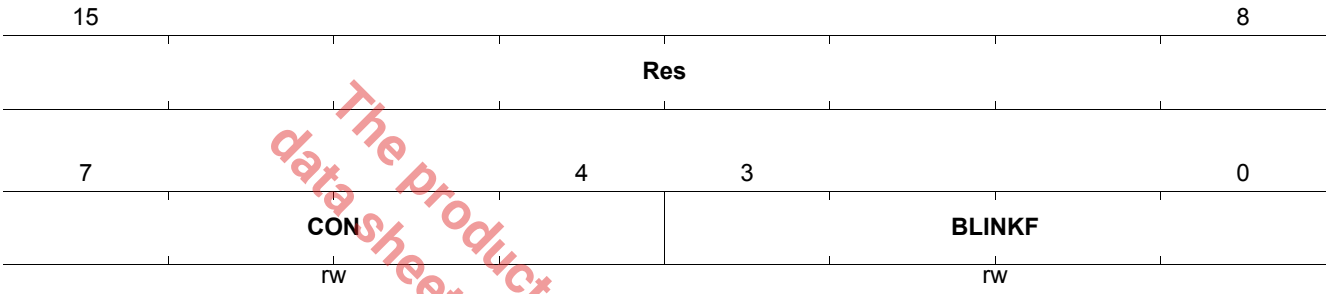

The product (or products) mentioned in this data sheet are no longer being manufactured and may not be ordered (OBS)

Field	Bits	Type	Description
CON	7:4	RW	**Constant On Configuration** The Constant-ON field selects in which PHY states the LED is constantly on. **Constants** 0000_B**NONE** LED does not light up constantly 0001_B**LINK10** LED is on when link is 10 Mbit/s 0010_B**LINK100** LED is on when link is 100 Mbit/s 0011_B**LINK10X** LED is on when link is 10/100 Mbit/s 0100_B**LINK1000** LED is on when link is 1000 Mbit/s 0101_B**LINK10_0** LED is on when link is 10/1000 Mbit/s 0110_B**LINK100X** LED is on when link is 100/1000 Mbit/s 0111_B**LINK10XX** LED is on when link is 10/100/1000 Mbit/s 1000_B**PDOWN** LED is on when device is powered-down 1001_B**EEE** LED is on when device is in EEE mode 1010_B**ANEG** LED is on when auto-negotiation is running 1011_B**ABIST** LED is on when analog self-test is running 1100_B**CDIAG** LED is on when cable diagnostics are running 1101_B**COPPER** LED is on when the COPPER interface is selected 1110_B**FIBER** LED is on when the FIBER or an interface other than copper is selected 1111_B**RESERVED** Reserved for future use

Field	Bits	Type	Description
BLINKF	3:0	RW	**Fast Blinking Configuration** The Blink-F Field selects in which PHY states the LED blinks with the pre-defined fast frequency. **Constants** 0000_B**NONE** No Blinking 0001_B**LINK10** Blink when link is 10 Mbit/s 0010_B**LINK100** Blink when link is 100 Mbit/s 0011_B**LINK10X** Blink when link is 10/100 Mbit/s 0100_B**LINK1000** Blink when link is 1000 Mbit/s 0101_B**LINK10_0** Blink when link is 10/1000 Mbit/s 0110_B**LINK100X** Blink when link is 100/1000 Mbit/s 0111_B**LINK10XX** Blink when link is 10/100/1000 Mbit/s 1000_B**PDOWN** Blink when device is powered-down 1001_B**EEE** Blink when device is in EEE mode 1010_B**ANEG** Blink when auto-negotiation is running 1011_B**ABIST** Blink when analog self-test is running 1100_B**CDIAG** Blink when cable diagnostics are running

Similar Registers

The following registers are identical to the Register **LED0H** defined above.

Table 39 Similar Registers

Register Short Name	Register Long Name	Offset Address	Reset Value
LED1H	Configuration for LED Pin 1	$1F.01E4_H$	0020_H
LED2H	Configuration for LED Pin 2	$1F.01E6_H$	0040_H
LED3H	Configuration for LED Pin 3	$1F.01E8_H$	0040_H

The product (or products) mentioned in this data sheet are no longer being manufactured and may not be ordered (OBS)

Configuration for LED Pin 0

This register configures the behavior of the LED depending on pre-defined states or events the PHY has entered into or raised. Since more than one event or state can be active at the same time, more than one function might apply simultaneously. The priority from highest to lowest is given by the order PULSE, BLINKS, BLINKF, CON.

LED0L	Offset	Reset Value
Configuration for LED Pin 0	$1F.01E3_H$	0003_H

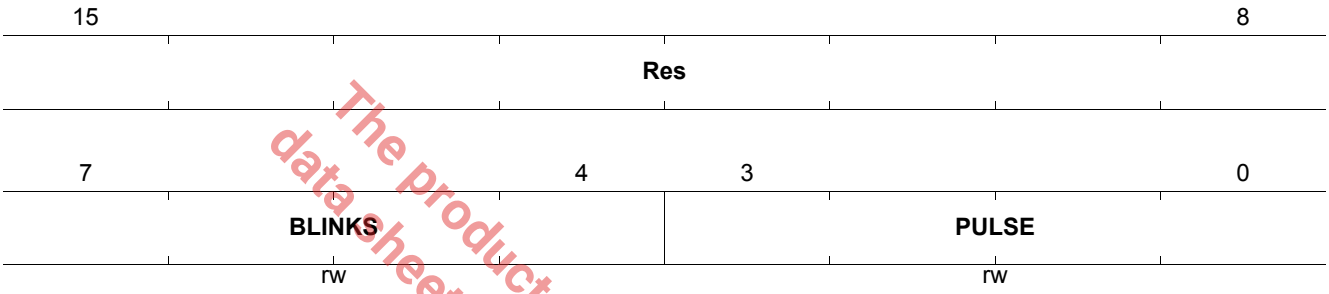

The product (or products) mentioned in this data sheet are no longer being manufactured and may not be ordered (OBS)

Field	Bits	Type	Description
BLINKS	7:4	RW	**Slow Blinking Configuration** The Blink-S field selects in which PHY states the LED blinks with the pre-defined slow frequency. **Constants** 0000_B**NONE** No Blinking 0001_B**LINK10** Blink when link is 10 Mbit/s 0010_B**LINK100** Blink when link is 100 Mbit/s 0011_B**LINK10X** Blink when link is 10/100 Mbit/s 0100_B**LINK1000** Blink when link is 1000 Mbit/s 0101_B**LINK10_0** Blink when link is 10/1000 Mbit/s 0110_B**LINK100X** Blink when link is 100/1000 Mbit/s 0111_B**LINK10XX** Blink when link is 10/100/1000 Mbit/s 1000_B**PDOWN** Blink when device is powered-down 1001_B**EEE** Blink when device is in EEE mode 1010_B**ANEG** Blink when auto-negotiation is running 1011_B**ABIST** Blink when analog self-test is running 1100_B**CDIAG** Blink when cable diagnostics are running
PULSE	3:0	RW	**Pulsing Configuration** The pulse field is a mask field by which certain events can be combined, e.g. TXACT|RXACT, to generate a pulse on the LED in case such an event has been detected. **Constants** 0000_B**NONE** No pulsing 0001_B**TXACT** Transmit activity 0010_B**RXACT** Receive activity 0100_B**COL** Collision 1000_B**RES** Reserved

Similar Registers

The following registers are identical to the Register **LED0L** defined above.

Table 40 Similar Registers

Register Short Name	Register Long Name	Offset Address	Reset Value
LED1L	Configuration for LED Pin 1	$1F.01E5_H$	0000_H
LED2L	Configuration for LED Pin 2	$1F.01E7_H$	0000_H
LED3L	Configuration for LED Pin 3	$1F.01E9_H$	0020_H

The product (or products) mentioned in this data sheet are no longer being manufactured and may not be ordered (OBS)

High Byte of the EEE Link-Fail Counter

High Byte of the EEE Link-Fail Counter.

EEE_RXERR_LINK_FAIL_H	Offset	Reset Value
High Byte of the EEE Link-Fail Counter	$1F.01EA_H$	0000_H

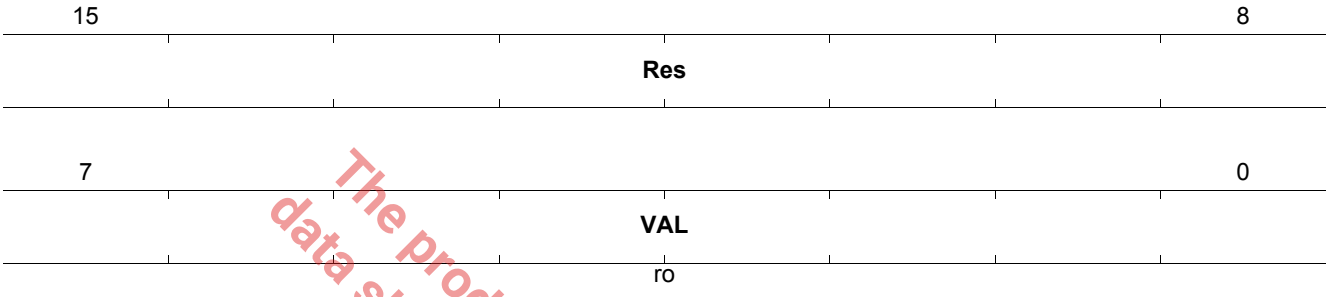

Field	Bits	Type	Description
VAL	7:0	RO	**VAL** High byte of the EEE_RXERR_LINK_FAIL counter. A read access to the low byte also clears the high byte of this counter.

Low Byte of the EEE Link-Fail Counter

Low Byte of the EEE Link-Fail Counter.

EEE_RXERR_LINK_FAIL_L	Offset	Reset Value
Low Byte of the EEE Link-Fail Counter	$1F.01EB_H$	0000_H

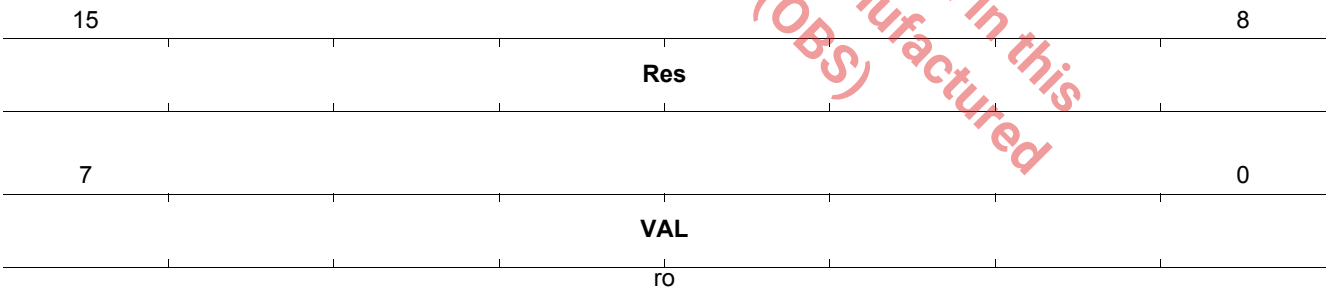

Field	Bits	Type	Description
VAL	7:0	RO	**VAL** Low byte of the EEE_RXERR_LINK_FAIL counter. A read access to this byte also clears the high byte of this counter.

The product (or products) mentioned in this data sheet are no longer being manufactured and may not be ordered (OBS)

Wake-On-LAN Control Register

Wake-On-LAN Control Register.

WOLCTRL	Offset	Reset Value
Wake-On-LAN Control Register	$1F.0781_H$	0000_H



The product (or product(s) mentioned in this data sheet are no longer being manufactured and may not be ordered (OBS).

Field	Bits	Type	Description
SPWD_EN	2	RW	**Secure-ON Password Enable** If enabled, checks for the Secure-ON password after the 16 MAC address repetitions. **Constants** 0_B **DISABLED** Secure-On password check is disabled 1_B **ENABLED** Secure-On password check is enabled
RES	1	RO	**Reserved** Must always be written to zero!
EN	0	RW	**Enables the Wake-On-LAN functionality** If Wake-On-LAN is enabled, the PHY scans for the configured magic packet and indicates its reception via the register bit ISTAT.WOL, and optionally also via interrupt. **Constants** 0_B **DISABLED** Wake-On-LAN functionality is disabled 1_B **ENABLED** Wake-On-LAN functionality is enabled

Wake-On-LAN Address Byte 0

Wake-On-LAN Address Byte 0.

WOLAD0	Offset	Reset Value
Wake-On-LAN Address Byte 0	$1F.0783_H$	0000_H

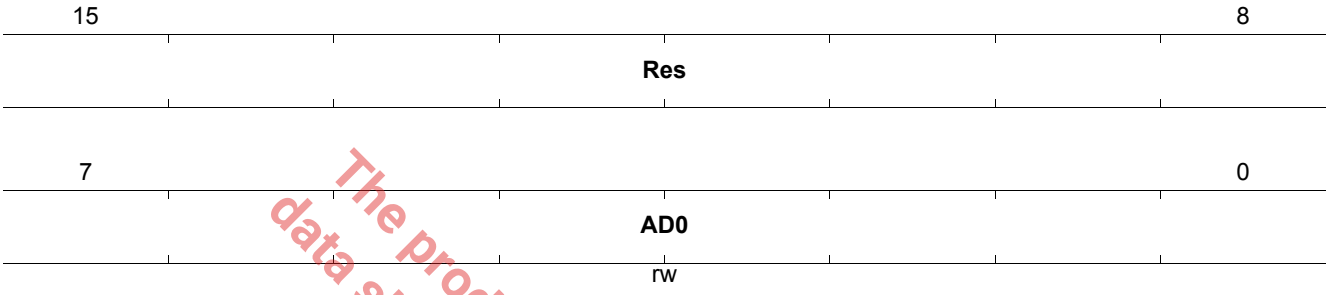

Field	Bits	Type	Description
AD0	7:0	RW	**Address Byte 0** Defines byte 0 of the WOL-designated MAC address to which the PHY is sensitive.

Similar Registers

The following registers are identical to the Register WOLAD0 defined above.

Table 41 Similar Registers

Register Short Name	Register Long Name	Offset Address	Reset Value
WOLAD1	Wake-On-LAN Address Byte 1	$1F.0784_H$	0000_H
WOLAD2	Wake-On-LAN Address Byte 2	$1F.0785_H$	0000_H
WOLAD3	Wake-On-LAN Address Byte 3	$1F.0786_H$	0000_H
WOLAD4	Wake-On-LAN Address Byte 4	$1F.0787_H$	0000_H
WOLAD5	Wake-On-LAN Address Byte 5	$1F.0788_H$	0000_H

The product (or products) mentioned in this data sheet are no longer being manufactured and may not be ordered (OBS)

Wake-On-LAN SecureON Password Byte 0

Wake-On-LAN SecureON Password Byte 0.

WOLPW0	Offset	Reset Value
Wake-On-LAN SecureON Password Byte 0	$1F.0789_H$	0000_H

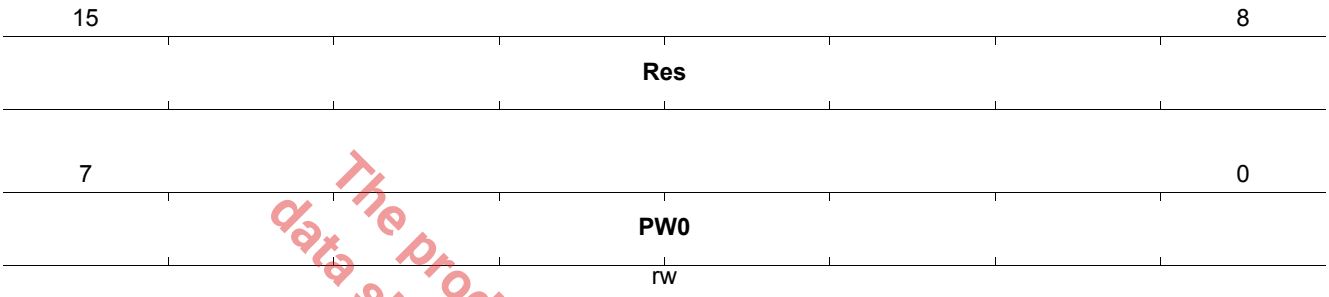

Field	Bits	Type	Description
PW0	7:0	RW	**SecureON Password Byte 0** Defines byte 0 of the WOL-designated SecureON password to which the PHY is sensitive.

Similar Registers

The following registers are identical to the Register WOLPW0 defined above.

Table 42 Similar Registers

Register Short Name	Register Long Name	Offset Address	Reset Value
WOLPW1	Wake-On-LAN SecureON Password Byte 1	$1F.078A_H$	0000_H
WOLPW2	Wake-On-LAN SecureON Password Byte 2	$1F.078B_H$	0000_H
WOLPW3	Wake-On-LAN SecureON Password Byte 3	$1F.078C_H$	0000_H
WOLPW4	Wake-On-LAN SecureON Password Byte 4	$1F.078D_H$	0000_H
WOLPW5	Wake-On-LAN SecureON Password Byte 5	$1F.078E_H$	0000_H

The product (or products) mentioned in this data sheet are no longer being manufactured and may not be ordered (OBS)

6 Electrical Characteristics

This chapter specifies the electrical characteristics of the GPY112.

6.1 Absolute Maximum Ratings

Table 43 shows the absolute maximum ratings for the GPY112.

Attention: Stresses above the maximum values listed in this table may cause permanent damage to the device. Exposure to absolute maximum rating conditions for extended periods may affect device reliability.

Attention: Maximum ratings are absolute ratings; exceeding only one of these values may cause irreversible damage to the device.

The product(or products) mentioned in this data sheet are no longer being manufactured and may not be ordered (OBS)

Table 43 Absolute Limit Ratings

Parameter	Symbol	Values			Unit	Note / Test Condition
		Min.	Typ.	Max.		
Storage temperature limits	T_{STG}	-55.0	–	125.0	°C	–
DC voltage limits on pad supply pins	V_{DDP}	-0.5	–	4.0	V	–
DC voltage limits on high supply pins	V_{DDH}	-0.5	–	4.0	V	–
DC voltage limits on DC/DC supply pins	V_{DDR}	-0.5	–	4.0	V	–
DC voltage limits on low supply pins	V_{DDL}	-0.5	–	1.6	V	–
DC voltage limits on core supply pins	V_{DDC}	-0.5	–	1.6	V	–
DC voltage limits on any digital pin[1)]	V_{DC}	-0.5	–	V_{DDP}+0.5	V	–
DC current limits on any digital input pin	$I_{DC,digital}$	-10.0	–	10.0	mA	–
DC current limits on DC/DC supply pin	$I_{DC,DC/DC}$	-400.0	–	400.0	mA	–
ESD robustness HBM: 1.5 kΩ, 100 pF	$V_{ESD,HBM}$	–	–	2000.0	V	According to EIA/JESD22-A114-B
ESD robustness	$V_{ESD,CDM}$	–	–	500.0	V	According to ESD association standard DS5.3.1 - 1999

1) That is, any pin which is not a supply pin of one of the domains: V_{DDH}, V_{DDL}, V_{DDC}

6.2 Operating Range

Table 44 defines the limit values of voltages and temperature that can be applied while still guaranteeing proper operation of the GPY112. As can be seen in the table, the device only needs one power supply, which can be arbitrarily chosen between 2.5 V and 3.3 V. When the optional DC/DC converter is not used, an additional low-voltage supply of 1.0 V is required.

For reliable and stable operation, it is highly recommended to keep the supply voltages as close as possible to the specified nominal voltages, and not approach the minimums specified.

Table 44 Operating Range

Parameter	Symbol	Values			Unit	Note / Test Condition
		Min.	Typ.	Max.		
Ambient temperature under bias	T_A	-40.0	–	85.0	°C	–
Pad supply voltage	V_{DDP}	3.14	3.30	3.47	V	3.3 V supply
		2.37	2.50	2.62	V	2.5 V supply
High supply voltage	V_{DDH}	3.14	3.30	3.47	V	3.3 V supply
		2.37	2.50	2.62	V	2.5 V supply
DC/DC supply voltage	V_{DDR}	3.14	3.30	3.47	V	3.3 V supply
		2.37	2.50	2.62	V	2.5 V supply
Low supply voltage	V_{DDL}	0.95	1.00	1.05	V	–
Core supply voltage	V_{DDC}	0.95	1.00	1.05	V	–
Ground	V_{SS}	0.00	0.00	0.00	V	–

The product (or products) mentioned in this data sheet are no longer being manufactured and may not be ordered (OBS)

6.3 Recommended Operating Conditions

The recommended conditions for typical applications are to use nominal voltages of either 2.5 V or 3.3 V for V_{DDP}, V_{DDH} and V_{DDR}. Table 44 shows the supported operating ranges for these typical nominal voltage values.

In order to optimize the overall power consumption of the GPY112, a supply voltage of 2.5 V is recommended. The 3.3 V supply is intended to support legacy systems with only 3.3 V supply lines. At V_{DDH} = 2.5 V, it is not possible to fulfill the requirements according to the standard specified in IEEE 802.3, clause 14.3.1.2.1 [1], as the peak voltage requirement in 10BASE-T mode is slightly violated due to physical limitations. The timing characteristics specified from this point onwards are only valid for nominal voltages of either 2.5 V or 3.3 V.

6.4 Power-Up Sequence

It is recommended that the voltage domains are powered up simultaneously. It is essential that the chip-reset signal be asserted before or simultaneously with the voltage domains power-up, and that this signal remains asserted for as long as specified in the reset AC characteristics in Chapter 6.6.1.

6.5 DC Characteristics

The following sections describe the DC characteristics of the GPY112 external interfaces.

6.5.1 Digital Interfaces

This section describes the DC characteristics of the digital interfaces.

6.5.1.1 GPIO Interfaces

This chapter defines the DC characteristics of the GPIO Interface, consisting of the following interfaces:

- MDIO (MDC, MDIO)
- EEPROM/I^{2}C (SCL, SDA)
- Management interrupt (MDINT)
- Clock outputs (CLKOUT)
- Chip reset (RSTN)

The DC characteristics for V_{DDP} = 2.5 V are summarized in **Table 45**.

The DC characteristics for V_{DDP} = 3.3 V are summarized in **Table 46**.

The product (or products) mentioned in this data sheet are no longer being manufactured and may not be ordered (OBS)

Table 45 DC Characteristics of the GPIO Interfaces (VDDP = 2.5 V)

Parameter	Symbol	Values			Unit	Note / Test Condition
		Min.	Typ.	Max.		
Input high voltage	V_{IH}	1.8	–	V_{DDP}+0.3	V	–
Input low voltage	V_{IL}	–	–	0.7	V	–
Output high voltage	V_{OH}	2.0	–	–	V	I_{OH} = -4 mA
Output low voltage	V_{OL}	–	–	0.4	V	I_{OL} = 4 mA

Table 46 DC Characteristics of the GPIO Interfaces (VDDP = 3.3 V)

Parameter	Symbol	Values			Unit	Note / Test Condition
		Min.	Typ.	Max.		
Input high voltage	V_{IH}	2.3	–	V_{DDP}+0.3	V	–
Input low voltage	V_{IL}	–	–	0.7	V	–
Output high voltage	V_{OH}	2.7	–	–	V	I_{OH} = -4 mA
Output low voltage	V_{OL}	–	–	0.4	V	I_{OL} = 4 mA

6.5.1.2 MII Receive Interface

This section defines the DC characteristics of the MII receive interface. Depending on the MII mode, this interface comprises the set of pins RX_CLK, RXD[7:0], RX_DV, RX_ERCOL, CRSand MII_TXC. The DC characteristics summarized in **Table 47** are valid for V_{DDP} = 2.5 V and V_{DDP} = 3.3 V.

Table 47 DC Characteristics of the Receive MII Interface

Parameter	Symbol	Values			Unit	Note / Test Condition
		Min.	Typ.	Max.		
Output high voltage (R)GMII mode	V_{OH}	2.1	–	–	V	I_{OH} = -1 mA, V_{DDP} = 2.37 V
Output high voltage MII mode	V_{OH}	2.4	–	–	V	I_{OH} = -4 mA, V_{DDP} = 3.13 V
Output low voltage	V_{OL}	–	–	0.4	V	I_{OL} = 4 mA

6.5.1.3 MII Transmit Interface

This section defines the DC characteristics of the MII transmit interface. Depending on the MII mode, this interface comprises the set of pins TX_CLK, TXD[7:0], TX_EN, TX_ER. The DC characteristics summarized in **Table 48** are valid for V_{DDP} = 2.5 V and V_{DDP} = 3.3 V. Note that these pins are multiplexed with a SerDes interface, for example SGMII or 1000BASE-X, depending on the operational mode of the GPY112. This chapter specifies the DC characteristics for the case that these pins operate in one of the non-SerDes modes.

Table 48 DC Characteristics of the Transmit MII Interface

Parameter	Symbol	Values			Unit	Note / Test Condition
		Min.	Typ.	Max.		
Input high voltage	V_{IH}	1.7	–	–	V	–
Input low voltage	V_{IL}	–	–	0.9	V	–

6.5.1.4 LED Interface

This section defines the DC characteristics of the LED interface, summarized in **Table 49**. Note that these characteristics only apply in LED-driving mode. During device startup, when the LED pins are serving the soft pin-strapping function, these characteristics do not necessarily apply.

Table 49 DC Characteristics of the Transmit LED Interface

Parameter	Symbol	Values			Unit	Note / Test Condition
		Min.	Typ.	Max.		
Output high voltage	V_{OH}	1.9	–	–	V	V_{DDH} = 2.5 V, I_{OH} = -15 mA
Output high voltage	V_{OH}	2.7	–	–	V	V_{DDH} = 3.3 V, I_{OH} = -15 mA
Output low voltage	V_{OL}	–	–	0.4	V	I_{OL} = 15 mA

The product(s) mentioned in this data sheet are no longer being manufactured and may not be ordered (OBS).

6.5.1.5 JTAG Interface

The JTAG Interface comprises the set of pins TCK, TDI, TDO and TMS. It operates in the VDDH power domain. The DC characteristics for V_{DDH} = 2.5 V and V_{DDH} = 3.3 V are summarized in **Table 50** and **Table 51**, respectively.

Table 50 DC Characteristics of the JTAG Interface (VDDH = 2.5 V)

Parameter	Symbol	Values			Unit	Note / Test Condition
		Min.	Typ.	Max.		
Input high voltage	V_{IH}	1.8	–	V_{DDH}+0.3	V	–
Input low voltage	V_{IL}	–	–	0.7	V	–
Output high voltage	V_{OH}	2.1	–	–	V	I_{OH} = -4 mA
Output low voltage	V_{OL}	–	–	0.4	V	I_{OL} = 4 mA

Table 51 DC Characteristics of the JTAG Interface (VDDH = 3.3 V)

Parameter	Symbol	Values			Unit	Note / Test Condition
		Min.	Typ.	Max.		
Input high voltage	V_{IH}	2.3	–	V_{DDH}+0.3	V	–
Input low voltage	V_{IL}	–	–	0.7	V	–
Output high voltage	V_{OH}	2.7	–	–	V	I_{OH} = -4 mA
Output low voltage	V_{OL}	–	–	0.4	V	I_{OL} = 4 mA

The product (or products) mentioned in this datasheet are no longer being manufactured and may not be ordered (OBS).

6.5.2 Twisted-Pair Interface

The TPI conforms to the 10BASE-T, 100BASE-TX and 1000BASE-T specifications described in IEEE802.3 **[1]**, as well as ANSI X3.263-1995 **[4]**.

6.5.3 SGMII Interface

Since the SGMII interface implementation on the GPY112 is purely AC coupled, there are no DC characteristics to be specified. Instead, **Chapter 6.9.6** specifies the AC-coupling external circuitry with an option to generate the common-mode offset voltage required for DC-coupled operation (compliant with **[13]**) with the SGMII link partner. The AC characteristics which apply in SGMII mode are specified in **Chapter 6.6.10**.

6.5.4 1000BASE-X Interface

Since the 1000BASE-X interface implementation on the GPY112 is purely AC coupled, there are no DC characteristics to be specified. Instead, **Chapter 6.9.7** specifies the AC-coupling external circuitry. The AC characteristics which apply in 1000BASE-X mode are specified in **Chapter 6.6.11**.

6.6 AC Characteristics

The following sections describe the AC characteristics of the external interfaces.

6.6.1 Reset

The GPY112 supports an asynchronous hardware reset, RSTN. The timing requirements of the GPY112 related to the RSTN pin are listed in **Table 52**. The timing requirements refer to the signal sequence waveforms shown in **Figure 40**[1].

After the power supply settling time, all primary input signals to the GPY112 must be defined. In particular, the device reset RSTN must be held for a time t_{reset}. As shown in **Figure 40**, the reference clock (either generated internally using an attached crystal, or applied externally from an external crystal oscillator) should be available at the latest before the reset is released. This setup time is denoted as t_{ref}. The maximum slope of the rising edge of the reset signal is constrained by the rise time t_r. In case the integrated DC/DC switching regulator is used to self-supply the low-voltage domains, the reference clock must not be interrupted at all, unless when powering down the system.

The GPY112 only starts booting its integrated device controller after the clock is running and the reset signal has been released. After locking the PLL to the reference clock, the device does soft pin-strapping as well as an EEPROM scan (only if an EEPROM is connected). Since the default values inside the MDIO address space are modified by both procedures, the first MDIO access is only allowed after a time t_{MDIO}.

Once the device is powered up, the clock output is continuously driven, irrespective of the status of the reset pin.

The product(s) mentioned in this data sheet are no longer being manufactured and may not be ordered (OBS)

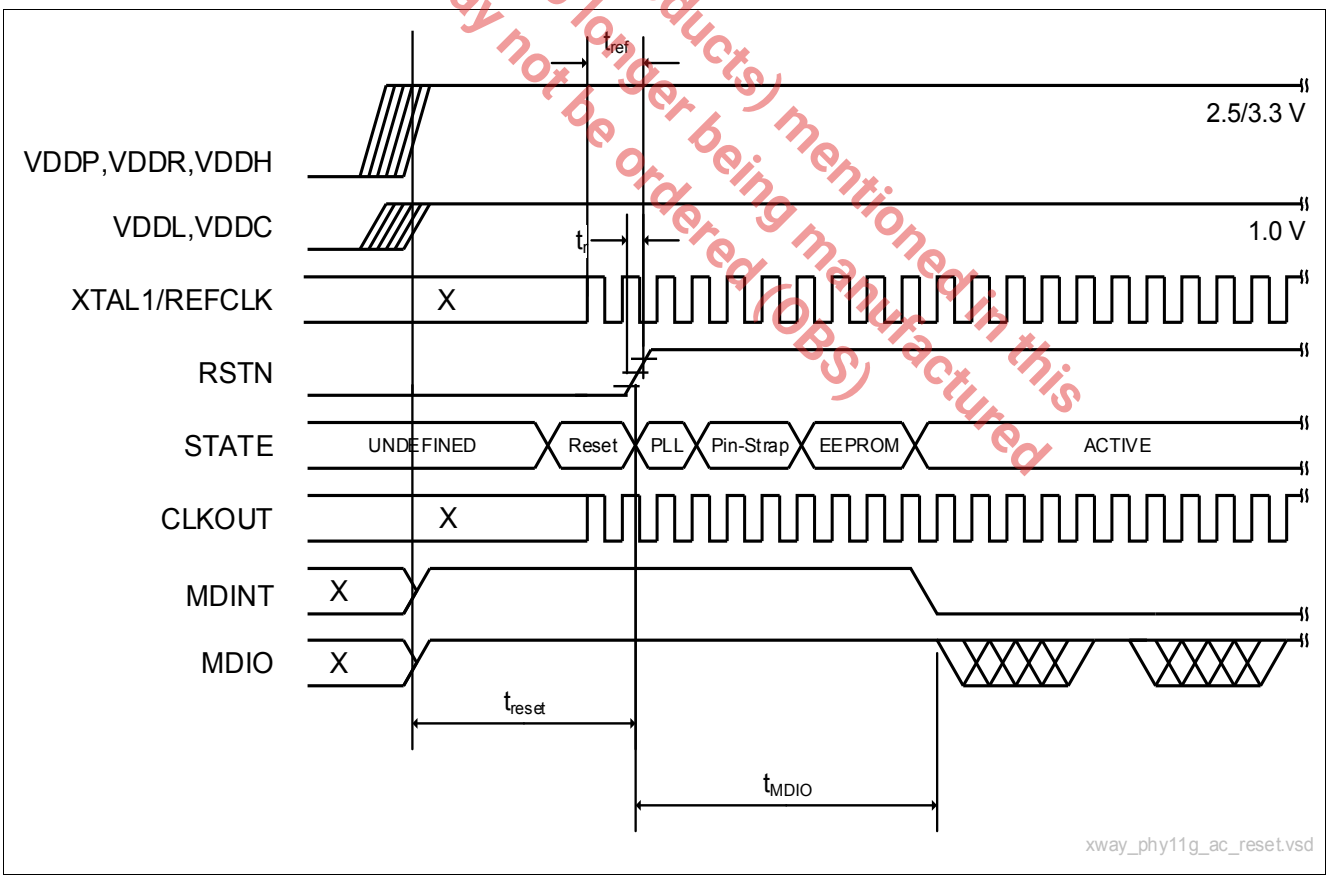

Figure 40 Timing Diagram for the GPY112 Reset Sequence

1) **Figure 40** shows an active-low MDINT signal. However, MDINT can be configured to either active-low or active-high, depending on the external configuration. Refer to **Chapter 3.4.3.3 - MDIO Interrupt** for more information.

Table 52 AC Characteristics of the RSTN Pin

Parameter	Symbol	Values			Unit	Note / Test Condition	
		Min.	Typ.	Max.			
Reset time	t_{reset}	200.0	–	–	ms	**Flow** Copper Converter	**Mode** SGMII/SGMII_NC CONV_X2T1000/ CONV_X2T1000A
		1.0	–	–	ms	Copper Fiber Dual	RGMII/RMII/GMII/MII FIBER_RGMII DUAL_RGMII
Rise time	t_R	–	–	10.0	ns	–	
First MDIO access after reset release	t_{MDIO}	300.0	–	–	ms	–	

Note: For proper operation, the reset should be activated for a duration of t_{reset}, after the power supply has settled to the correct value. Further, the signals at the CLK1 and CLK2 pads should also have stabilized.

The product (or products) mentioned in this data sheet are no longer being manufactured and may not be ordered (OBS)

6.6.2 Power Supply

Table 53 lists the AC characteristics of the power supplies.

Table 53 AC Characteristics of the Power Supply

Parameter	Symbol	Values			Unit	Note / Test Condition
		Min.	Typ.	Max.		
Power supply ripple on VDDL	R_{VDDL}	–	–	50.0	mV	Peak-peak value
Power supply ripple on VDDC	R_{VDDC}	–	–	50.0	mV	Peak-peak value
Power supply ripple on VDDP	R_{VDDP}	–	–	100.0	mV	Peak-peak value
Power supply ripple on VDDH	R_{VDDH}	–	–	100.0	mV	Peak-peak value
Power supply ripple on VDDR	R_{VDDR}	–	–	100.0	mV	Peak-peak value

Attention: It is to be noted that the operating range specified in Table 44 must still be respected, when above power supply ripple voltages are considered.

6.6.3 Input Clock

Table 54 lists the input clock requirements for the case when no crystal is used, that is, when an external reference clock is applied at the XTAL1 pin of the GPY112. The table includes nominal frequency, frequency deviation, duty cycle and signal characteristics. If a crystal is used with the integrated oscillator to generate the reference clock, the clock requirements stated here are implicitly met as long as the specification for the crystal outlined in Chapter 6.9.1 is satisfied.

Table 54 AC Characteristics of Input Clock on XTAL1 Pin

Parameter	Symbol	Values			Unit	Note / Test Condition
		Min.	Typ.	Max.		
Frequency with 25 MHz input[1)]	f_{clk25}	–	25.0	–	MHz	–
Frequency with 125 MHz input[1)]	f_{clk125}	–	125.0	–	MHz	–
Frequency deviation		-50.0	–	+50.0	ppm	–
Duty cycle		40.0	50.0	60.0	%	–
Rise/fall times		–	–	1.0	ns	–

1) More details on how to select the output frequency are given in **Chapter 3.4.1**.

The product(or products) mentioned in this data sheet are no longer being manufactured and may not be ordered (OBS)

6.6.4 Output Clock

Table 55 lists the output clock requirements for the CLKOUT pin on the GPY112, including nominal frequency, frequency deviation, duty cycle and signal characteristics.

Table 55 AC Characteristics of Output Clock on CLKOUT Pin

Parameter	Symbol	Values			Unit	Note / Test Condition
		Min.	Typ.	Max.		
Frequency at 25 MHz	f_{clk25}	–	25.0	–	MHz	–
Frequency deviation		-50.0	–	+50.0	ppm	–
Duty cycle		49.0	50.0	51.0	%	–
Rise/fall-times		–	–	1.0	ns	–

6.6.5 MDIO Interface

Figure 41 shows a timing diagram of the MDIO interface for a clock cycle in the read, write and turn-around modes. The timing measurements are annotated, and their absolute values defined in **Table 56**.

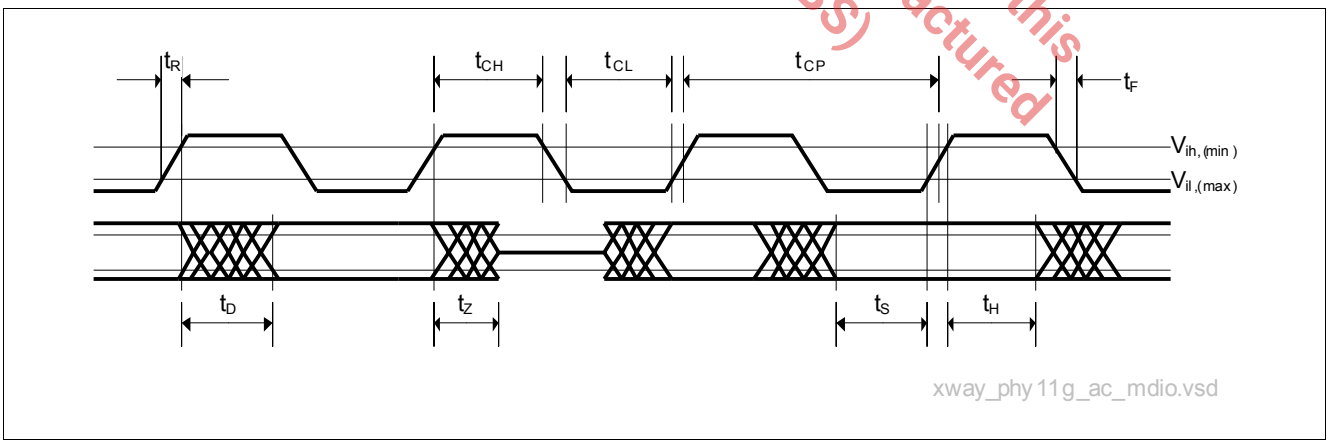

Figure 41 Timing Diagram for the MDIO Interface

Table 56 AC Characteristics of the MDIO Interface

Parameter	Symbol	Values			Unit	Note / Test Condition
		Min.	Typ.	Max.		
MDC high time	t_{CH}	10.0	–	–	ns	Given timings are all subject to the MDC at the pin of the GPY112.
MDC low time	t_{CL}	10.0	–	–	ns	
MDC clock period	t_{CP}	40.0	–	–	ns	
MDC clock frequency	t_{CP}	–	–	25.0	MHz	
MDC rise time	t_R	–	–	5.0	ns	
MDC fall time	t_F	–	–	5.0	ns	
MDIO read delay	t_D	0.0	–	10.0	ns	
MDIO high-Ohmic (Z) delay	t_Z	0.0	–	10.0	ns	
MDIO setup time	t_S	4.0	–	–	ns	
MDIO hold time	t_H	4.0	–	–	ns	

The product (or products) mentioned in this data sheet are no longer being manufactured and may not be ordered (OBS)

6.6.6 MII Interface

This section investigates the AC characteristics of the MII interface on the GPY112. This interface conforms with the MII specifications given in IEEE802.3, clause 22 [1]. The standard's requirements are exceeded wherever applicable.

6.6.6.1 Transmit Timing Characteristics

Figure 42 shows the timing diagram of the transmit MII interface on the GPY112. It is referred to by **Table 57** and **Table 58**, which specify the timing requirements at 10 Mbit/s and 100 Mbit/s, respectively.

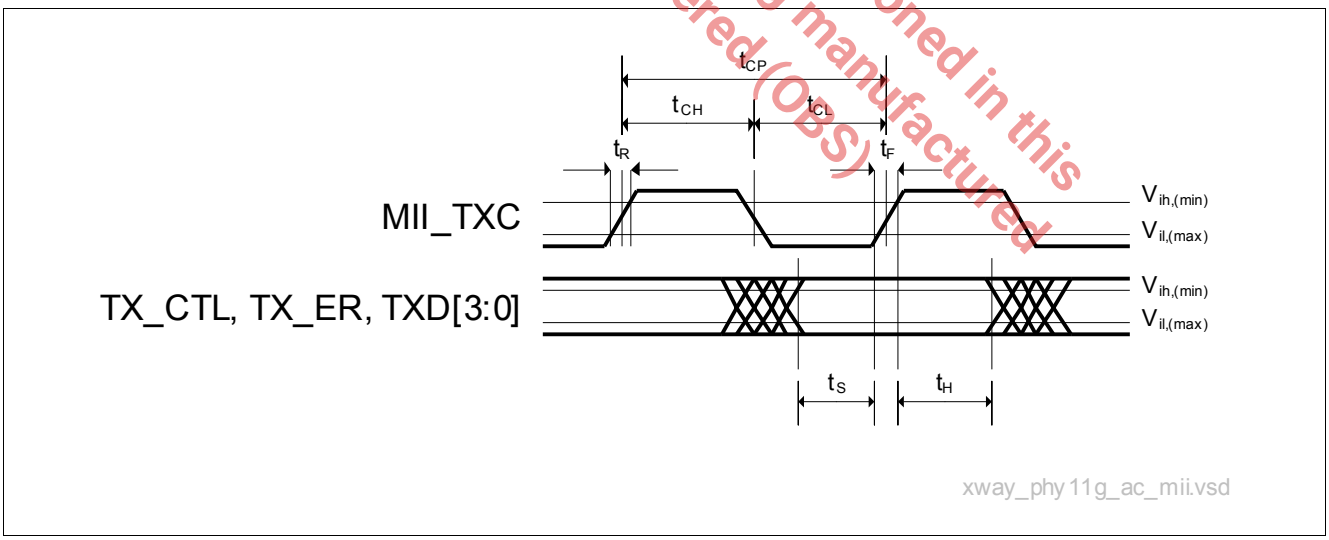

Figure 42 Transmit Timing Diagram of the MII

Table 57 Transmit Timing Characteristics of the MII at 10 Mbit/s

Parameter	Symbol	Values			Unit	Note / Test Condition
		Min.	Typ.	Max.		
Transmit clock period (MII_TXC)	t_{CP}	399.96	400.00	400.04	ns	±100 ppm
Transmit clock high time (MII_TXC)	t_{CH}	140.00	200.00	260.00	ns	–

Table 57 Transmit Timing Characteristics of the MII at 10 Mbit/s (cont'd)

Parameter	Symbol	Values			Unit	Note / Test Condition
		Min.	Typ.	Max.		
Transmit clock low time (MII_TXC)	t_{CL}	140.00	200.00	260.00	ns	–
Transmit clock rise time (MII_TXC)	t_R	–	–	1.00	ns	–
Transmit clock fall time (MII_TXC)	t_F	–	–	1.00	ns	–
Setup time subject to ↑ MII_TXC	t_S	10.00	–	–	ns	–
Hold time subject to ↑ MII_TXC	t_H	0.00	–	–	ns	–

Table 58 Transmit Timing Characteristics of the MII at 100 Mbit/s

Parameter	Symbol	Values			Unit	Note / Test Condition
		Min.	Typ.	Max.		
Transmit clock period (MII_TXC)	t_{CP}	39.996	40.00	40.004	ns	±100 ppm
Transmit clock high time (MII_TXC)	t_{CH}	14.000	20.00	26.000	ns	–
Transmit clock low time (MII_TXC)	t_{CL}	14.000	20.00	26.000	ns	–
Transmit clock rise time (MII_TXC)	t_R	–	–	1.000	ns	–
Transmit clock fall time (MII_TXC)	t_F	–	–	1.000	ns	–
Setup time subject to ↑ MII_TXC	t_S	10.00	–	–	ns	–
Hold time subject to ↑ MII_TXC	t_H	0.00	–	–	ns	–

The product (or products) mentioned in this data sheet are no longer being manufactured and may not be ordered (OBS)

6.6.6.2 Receive Timing Characteristics

Figure 43 shows the timing diagram of the receive MII interface on the GPY112. It is referred to by Table 59 and Table 60, which specify the timing requirements at 10 Mbit/s and 100 Mbit/s, respectively.

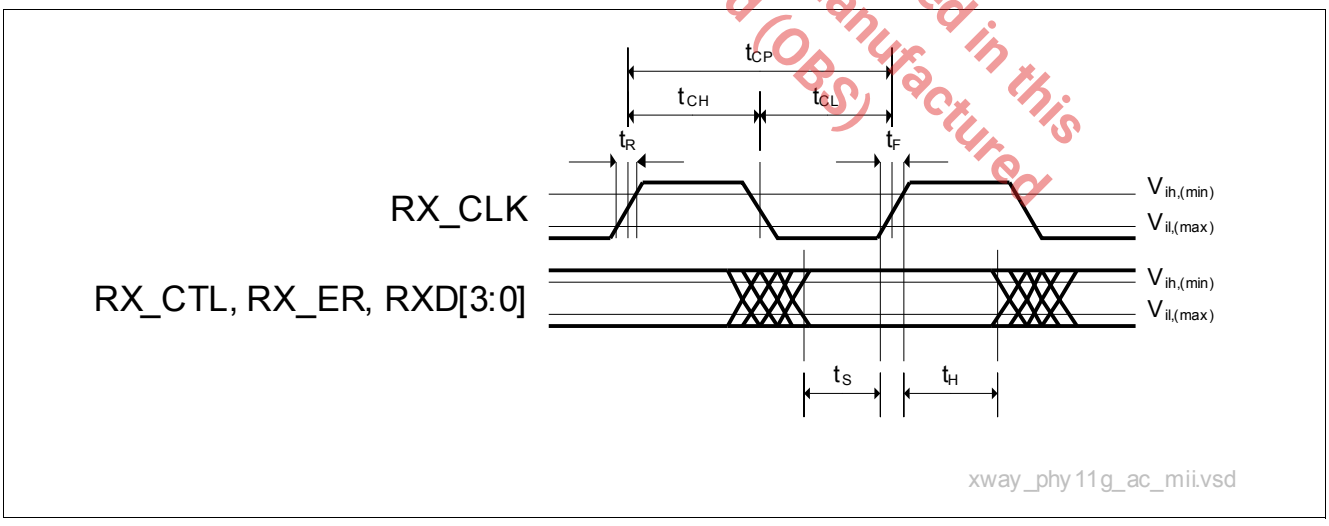

Figure 43 Receive Timing Diagram of the MII

Table 59 Receive Timing Characteristics of the MII at 10 Mbit/s

Parameter	Symbol	Values			Unit	Note / Test Condition
		Min.	Typ.	Max.		
Receive clock period (RX_CLK)	t_{CP}	399.96	400.00	400.04	ns	±100 ppm
Receive clock high time (RX_CLK)	t_{CH}	140.0	200.0	260.0	ns	–
Receive clock low time (RX_CLK)	t_{CL}	140.0	200.0	260.0	ns	–
Receive clock rise time (RX_CLK)	t_R	–	–	1.0	ns	–
Receive clock fall time (RX_CLK)	t_F	–	–	1.0	ns	–
Setup time subject to ↑ RX_CLK	t_S	10.0	–	–	ns	–
Hold time subject to ↑ RX_CLK	t_H	10.0	–	–	ns	–

Table 60 Receive Timing Characteristics of the MII at 100 Mbit/s

Parameter	Symbol	Values			Unit	Note / Test Condition
		Min.	Typ.	Max.		
Receive clock period (RX_CLK)	t_{CP}	39.996	40.00	40.004	ns	±100 ppm
Receive clock high time (RX_CLK)	t_{CH}	14.0	20.0	26.0	ns	–
Receive clock low time (RX_CLK)	t_{CL}	14.0	20.0	26.0	ns	–
Receive clock rise time (RX_CLK)	t_R	–	–	1.0	ns	–
Receive clock fall time (RX_CLK)	t_F	–	–	1.0	ns	–
Setup time subject to ↑ RX_CLK	t_S	10.0	–	–	ns	–
Hold time subject to ↑ RX_CLK	t_H	10.0	–	–	ns	–

Note: The timings specified above conform to the standard. The receive signal is driven on the falling edge of RX_CLK by design. The timing characteristics of RGMII apply due to the single constraining concept of the xMII. In particular the setup and hold time in RGMII mode are 0.5 ns. Taking the maximum duty cycle distortion into account this means $t_{H,S}$ = 14 - 0.5 = 13.5, i.e. in addition to the above specified timings there is a 3.5 ns margin.

The product (or products) mentioned in this datasheet are no longer being manufactured and may not be ordered (OBS)

6.6.7 RMII Interface

This section describes the AC characteristics of the RMII interface on the GPY112. This interface conforms to the RMII specification as defined by the RMII Consortium in **[11]**.

Figure 44 shows the timing diagram of the transmit MII interface on the GPY112. It is referred to by **Table 61**, which specifies the timing requirements at 10 Mbit/s and 100 Mbit/s, respectively. Note that the figures provided in the table apply as setup and hold timings for all inputs (TXD[1:0], TX_EN) and as output delay to all outputs (RXD[1:0], CRS_DV and RX_ER) of this interface.

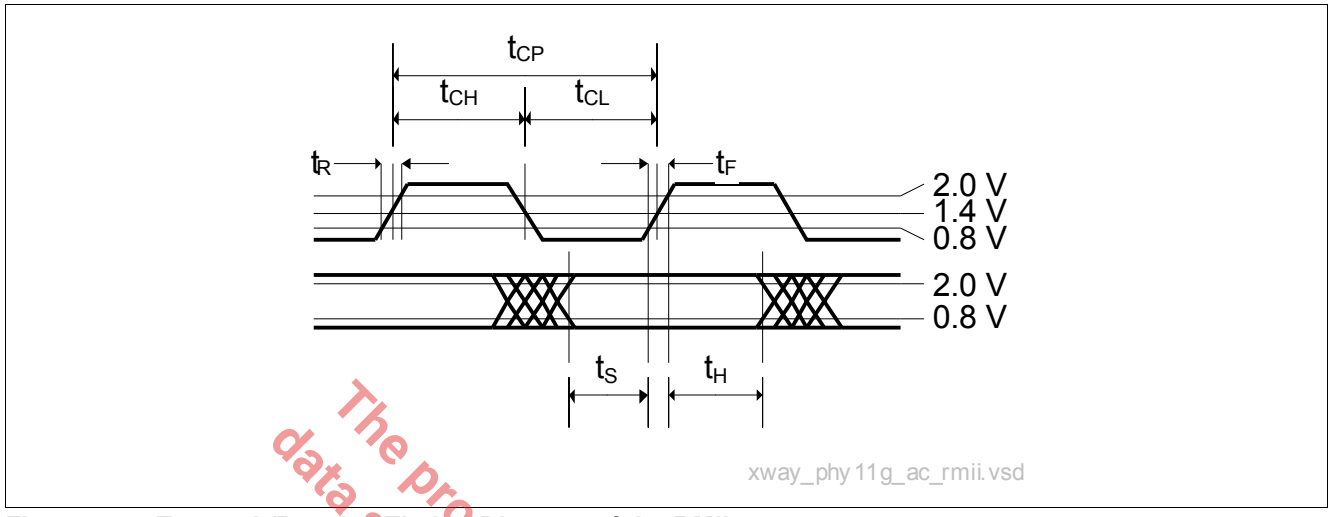

Figure 44 Transmit/Receive Timing Diagram of the RMII

The product (or products) mentioned in this data sheet are no longer being manufactured and may not be ordered (OBS)

Table 61 Timing Characteristics of the RMII at 10/100 Mbit/s

Parameter	Symbol	Values			Unit	Note / Test Condition
		Min.	Typ.	Max.		
Reference clock period	t_{CP}	19.999	20.00	20.001	ns	±50 ppm
Reference clock frequency	F_{REF}	50.00 - 50 ppm	50.00	50.0 +50 ppm	MHz	±50 ppm
Reference clock high time	t_{CH}	7.00	10.00	13.00	ns	–
Reference clock low time	t_{CL}	7.00	10.00	13.00	ns	–
Reference clock duty cycle	$D = t_{CH}/t_{CL}$	35.00	50.00	65.00	%	–
Rise time (clock and data)	t_R	1.00	–	5.00	ns	–
Fall time (clock and data)	t_F	1.00	–	5.00	ns	–
Setup time/output delay subject to ↑ REFCLK	t_S	4.00	–	–	ns	–
Hold time/output delay subject to ↑ REFCLK	t_H	2.00	–	–	ns	–

The product (or products) mentioned in this datasheet are no longer being manufactured and may not be ordered (OBS)

6.6.8 GMII Interface

This section describes the AC characteristics of the GMII interface on the GPY112. This interface conforms to the GMII specifications given in IEEE802.3, clause 35 [1]. The standard's requirements are exceeded wherever applicable.

6.6.8.1 Transmit Timing Characteristics

Figure 45 shows the timing diagram of the transmit GMII interface at the GPY112. It is referred to by Table 62, which specifies the timing requirements at 1000 Mbit/s.

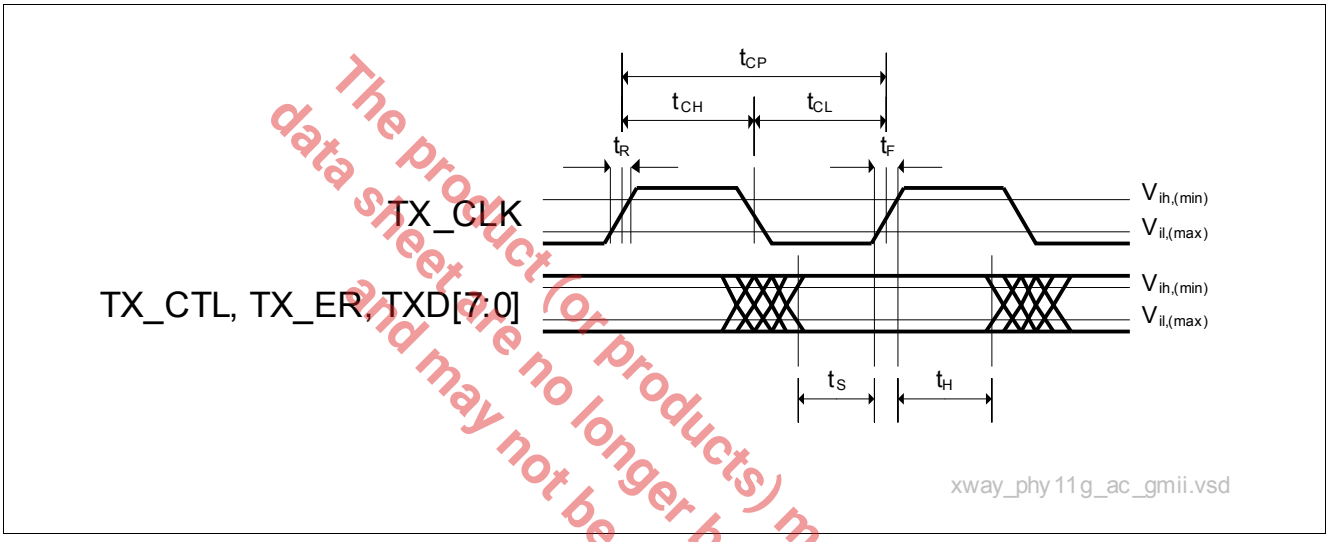

The product (or products) mentioned in this data sheet are no longer being manufactured and may not be ordered (OBS)

Figure 45 Transmit Timing Diagram of the GMII

Table 62 Transmit Timing Characteristics of the GMII

Parameter	Symbol	Values			Unit	Note / Test Condition
		Min.	Typ.	Max.		
Transmit clock frequency (TX_CLK)	f_{TX_CLK}	125.0-100 ppm	125.0	125.0+100 ppm	MHz	Long-term average frequency
Transmit clock period (TX_CLK)	t_{CP}	7.5	8.0	8.5	ns	Measured according to IEEE 802.3 clause 35.4.1
Transmit clock high time (TX_CLK)	t_{CH}	2.5	4.0	5.5	ns	
Transmit clock low time (TX_CLK)	t_{CL}	2.5	4.0	5.5	ns	
Transmit clock rise time (TX_CLK)	t_R	–	–	1.0	ns	
Transmit clock fall time (TX_CLK)	t_F	–	–	1.0	ns	
Setup time subject to ↑ TX_CLK	t_S	2.0	–	–	ns	
Hold time subject to ↑ TX_CLK	t_H	0.0	–	–	ns	
AC input high-level	$V_{ih(min)}$	1.9	–	–	V	
AC Input low-level	$V_{il(max)}$	–	–	0.7	V	

Note: The setup time is in practice 1.0 ns due to the single xMII constraining concept. Thus, the RGMII defines the worst case, which is t_S=1.0 ns. On the other hand, the hold-time requirement of GMII defines the worst-case for RGMII.

6.6.8.2 Receive Timing Characteristics

Figure 46 shows the timing diagram of the receive GMII interface on the GPY112. It is referred to by Table 63, which specifies the timing requirements.

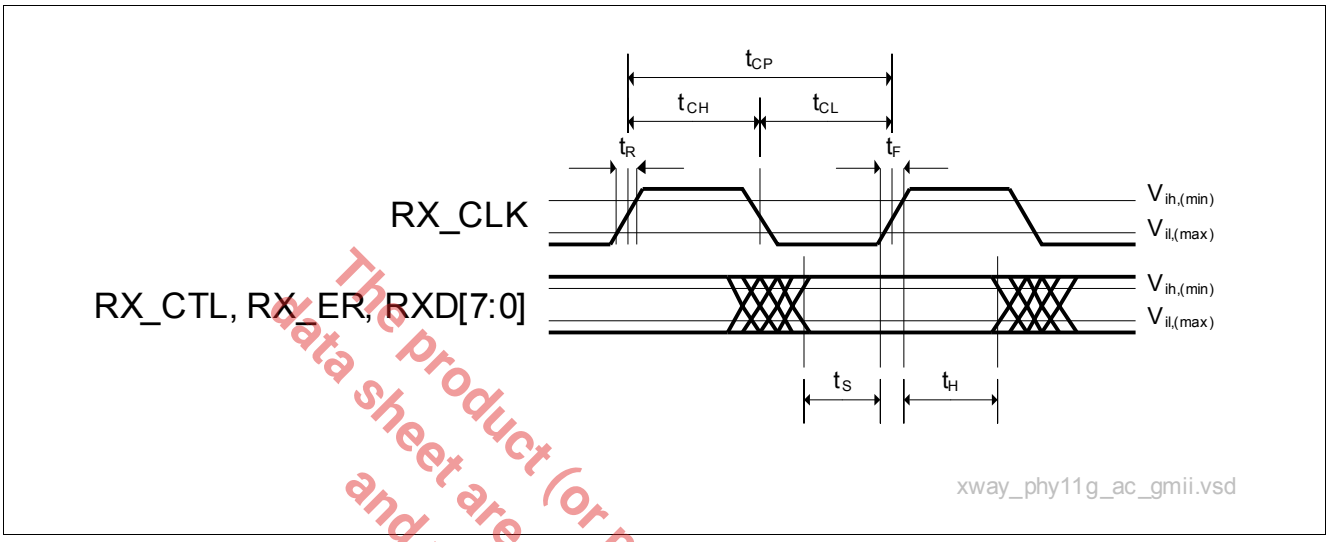

Figure 46 Receive Timing Diagram of the GMII

Table 63 Receive Timing Characteristics of the GMII

Parameter	Symbol	Values			Unit	Note / Test Condition
		Min.	Typ.	Max.		
Receive clock period (RX_CLK)	t_{CP}	7.5	8.0	8.5	ns	Measured according to IEEE 802.3 clause 35.4.1
Receive clock high time (RX_CLK)	t_{CH}	3.5	4.0	4.5	ns	
Receive clock low time (RX_CLK)	t_{CL}	3.5	4.0	4.5	ns	
Receive clock rise time (RX_CLK)	t_R	–	–	1.0	ns	
Receive clock fall time (RX_CLK)	t_F	–	–	1.0	ns	
Setup time subject to ↑ RX_CLK	t_S	2.5	–	–	ns	
Hold time subject to ↑ RX_CLK	t_H	0.5	–	–	ns	
AC input high-level	$V_{ih(min)}$	1.9	–	–	V	
AC input low-level	$V_{il(max)}$	–	–	0.7	V	

Note: The above specified timings conform to the standard. By design the RX signals are driven on the falling edge of RX_CLK. Due to the single xMII constraining concept, the constraining is defined by the worst case interface type which is RGMII. The actual setup and hold times are much better than specified above. In particular, $t_{S,H}$ = 3.5 ns - 0.5 ns = 3.0 ns. Thus an additional margin of 0.5 ns for setup and 2.5 ns for hold time are inherently given.

The product (or product) mentioned in this data sheet are no longer being manufactured and may not be ordered (OBS)

6.6.9 RGMII Interface

This section describes the AC characteristics of the RGMII interface on the GPY112. Unless no HSTL voltages are supported, this interface conforms to the RGMII specification v1.3 and v2.0, as defined in [9] and [10] respectively. The RGMII interface can operate at speeds of 10 Mbit/s, 100 Mbit/s and 1000 Mbit/s.

6.6.9.1 Transmit Timing Characteristics

Figure 47 shows the timing diagram of the transmit RGMII interface on the GPY112. It is referred to by Table 64, which specifies the timing requirements. Note the data and control signals are clocked in using the internal delayed version of the TX_CLK which is the external clock delayed by the integrated delay. The delay is adjustable in steps of 0.5 ns via MDIO. If the integrated delay is not used, for example because it is implemented externally by PCB wire delays, it must be set to zero, in which case all the timings are related directly to the TX_CLK on the pin.

The product(or products) mentioned in this data sheet are no longer being manufactured and may not be ordered (OBS)

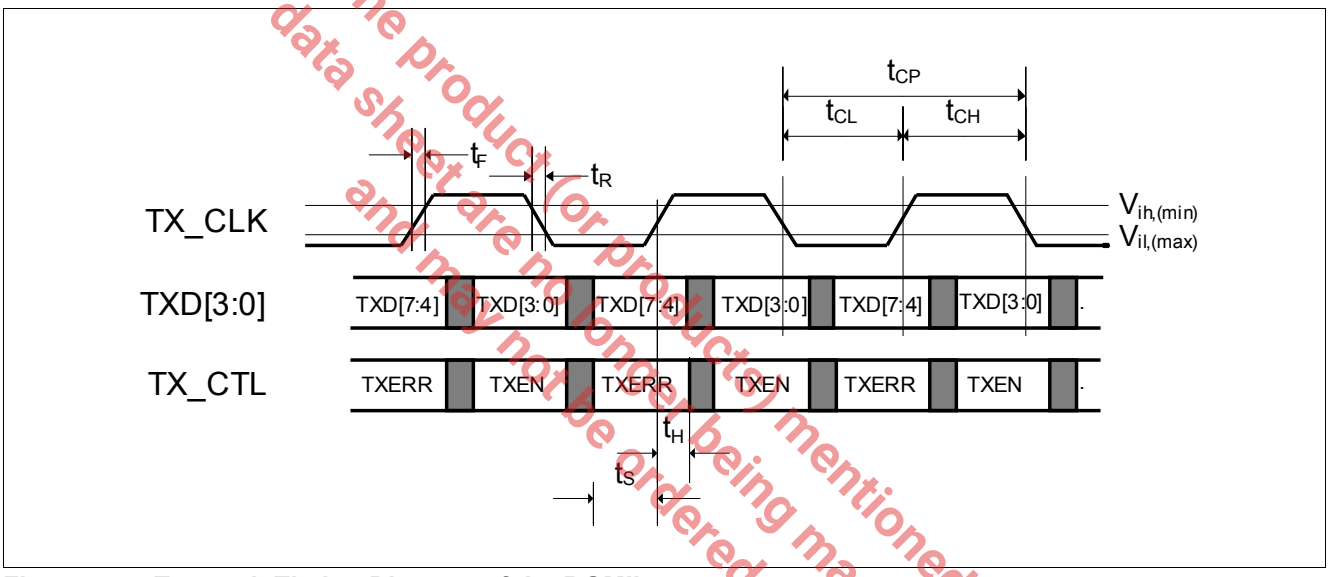

Figure 47 Transmit Timing Diagram of the RGMII

Table 64 Transmit Timing Characteristics of the RGMII

Parameter	Symbol	Values			Unit	Note / Test Condition
		Min.	Typ.	Max.		
Transmit clock frequency (TX_CLK)	f_{TX_CLK}	-50 ppm	125.0	+ 50 ppm	MHz	For 1000 Mbit/s speed
			25.0		MHz	For 100 Mbit/s speed
			2.5		MHz	For 10 Mbit/s speed
Transmit clock period (TX_CLK)	t_{CP}	7.2	8.0	8.8	ns	For 1000 Mbit/s speed
		36.0	40.0	44.0	ns	For 100 Mbit/s speed
		360.0	400.0	440.0	ns	For 10 Mbit/s speed
Duty cycle	t_{CH}/t_{CP}, t_{CL}/t_{CP}	45.0	50.0	55.0	%	Speed-independent
Transmit clock rise time (TX_CLK)	t_R	–	–	750.0	ps	20%→80%
Transmit clock fall time (TX_CLK)	t_F	–	–	750.0	ps	80%→20%
Setup time to ↑↓ TX_CLK	t_S	1.0	–	–	ns	

Table 64 Transmit Timing Characteristics of the RGMII (cont'd)

Parameter	Symbol	Values			Unit	Note / Test Condition
		Min.	Typ.	Max.		
Hold time to ↑↓ TX_CLK	t_H	1.0	–	–	ns	–
Integrated transmit clock delay	t_{ID}	0.0	k*0.5	3.5	ns	Adjustable via MDIO register

6.6.9.2 Receive Timing Characteristics

Figure 48 shows the timing diagram of the receive RGMII interface on the GPY112. It is referred to by Table 65, which specifies the timing requirements. The external clock on the pin is delayed by the integrated delay, which is adjustable in steps of 0.5 ns via MDIO. If the integrated delay is not used, for example because it is implemented externally by PCB wire delays, it must be set to zero, in which case all the timings are related directly to the RX_CLK on the pin.

The product (or products) mentioned in this data sheet are no longer being manufactured and may not be ordered (OBS)

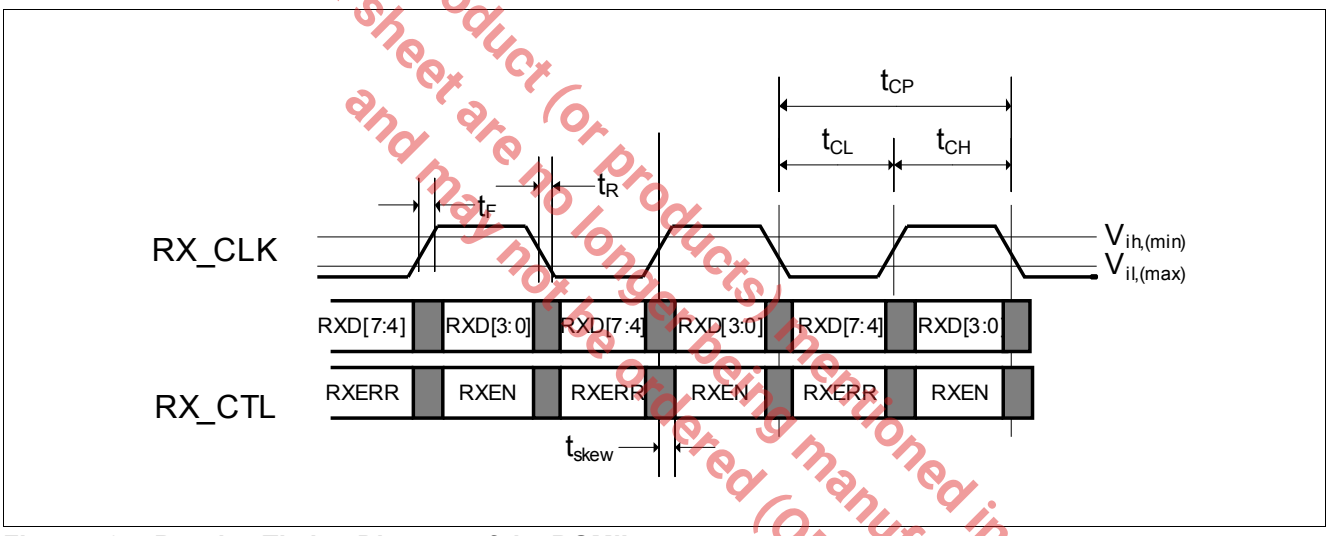

Figure 48 Receive Timing Diagram of the RGMII

Table 65 Receive Timing Characteristics of the RGMII

Parameter	Symbol	Values			Unit	Note / Test Condition
		Min.	Typ.	Max.		
Receive clock frequency (RX_CLK)	f_{RX_CLK}	-50 ppm	125.0	+ 50 ppm	MHz	For 1000 Mbit/s speed
			25.0		MHz	For 100 Mbit/s speed
			2.5		MHz	For 10 Mbit/s speed
Receive clock period (RX_CLK)	t_{CP}	7.5	8.0	8.5	ns	For 1000 Mbit/s speed
		39.5	40.0	40.5	ns	For 100 Mbit/s speed
		399.5	400.0	400.5	ns	For 10 Mbit/s speed
Duty cycle	t_{CH}/t_{CP}, t_{CL}/t_{CP}	45.0	50.0	55.0	%	Speed-independent
Receive clock rise time (TX_CLK)	t_R	–	–	750.0	ps	20% → 80%
Receive clock fall time (TX_CLK)	t_F	–	–	750.0	ps	80% → 20%

Table 65 Receive Timing Characteristics of the RGMII (cont'd)

Parameter	Symbol	Values			Unit	Note / Test Condition
		Min.	Typ.	Max.		
Clock-to-data skew	t_{skew}	-0.5	0.0	0.5	ns	The skew between the RXC and RXC/RX_CTL should be less than 500 ps
Integrated receive clock delay	t_{ID}	0.0	k*0.5	3.5	ns	Adjustable via MDIO register

The product (or products) mentioned in this data sheet are no longer being manufactured and may not be ordered (OBS)

6.6.10 SGMII Interface

This section describes the AC characteristics of the SGMII Interface on the GPY112. This interface conforms to the SGMII specification v1.7, as defined in **[13]**. The SGMII interface can operate at 1.25 Gbaud. The net data-rate is 1000 Mbit/s. Using repetition modes, 10 Mbit/s and 100 Mbit/s are supported.

Also note that **Chapter 6.9.6** specifies the external circuitry.

6.6.10.1 Transmit Timing Characteristics

Figure 49 shows the timing diagram of the transmit SGMII interface at the GPY112. It is referred to by **Table 66**, which specifies the timing requirements.

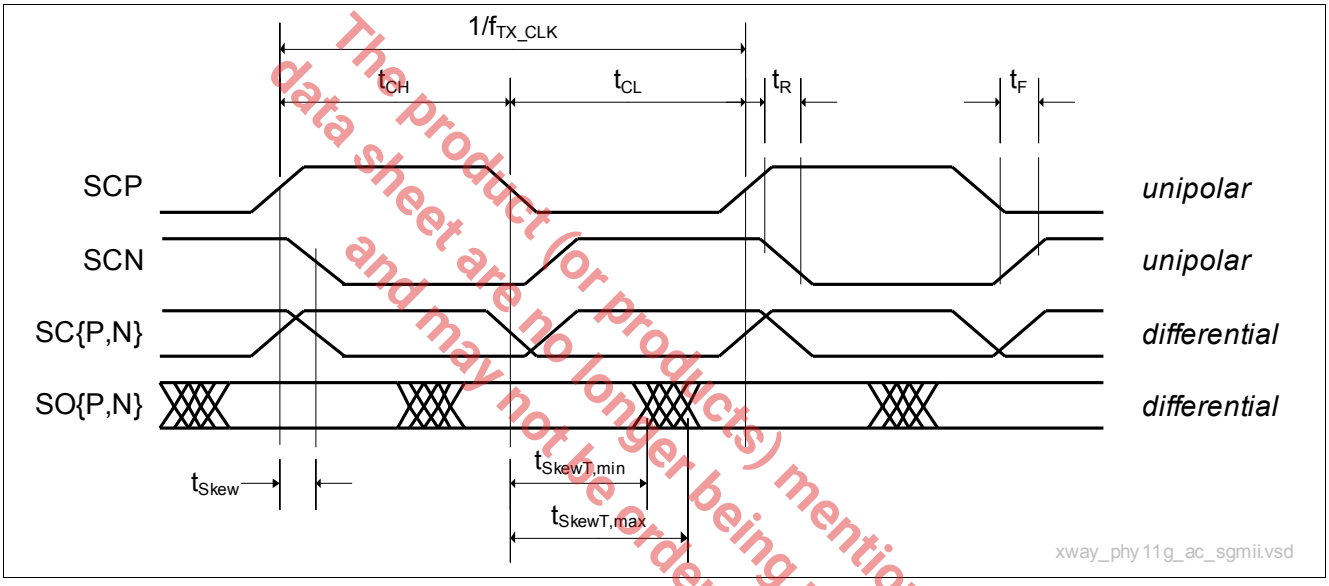

Figure 49 Transmit Timing Diagram of the SGMII

The product (or products) mentioned in this data sheet are no longer being manufactured and may not be ordered (OBS)

Table 66 Transmit Timing Characteristics of the SGMII

Parameter	Symbol	Values			Unit	Note / Test Condition
		Min.	Typ.	Max.		
Transmit clock frequency	f_{TX_CLK}	-50 ppm	625.0	+ 50 ppm	MHz	–
Transmit clock duty cycle	$D_{CP} = t_{CH}/t_{CL}$	48	50	52	%	–
Transmit rise time	t_R	100	–	200	ps	20%→80%
Transmit fall time	t_F	100	–	200	ps	80%→20%
Clock-to-data skew at TX	t_{SkewT}	250	–	550	ps	–
Output timing jitter	J_{TX}	–	–	240	ps	Peak-peak[1)]
Time skew between pairs	t_{Skew}	–	–	20	ps	–
Output differential voltage	V_{OD}	150	250	400	mV	Peak-peak amplitude
Output voltage ringing	V_{ring}	–	–	10	%	–
Output impedance (single-ended)	R_O	40	–	60	Ω	–
Output impedance (differential)	R_O	80	–	120	Ω	–
Delta output impedance	dR_O	–	–	10	%	–

1) Assuming BER = 1e-12 and tracking BW = 1 MHz

6.6.10.2 Receive Timing Characteristics

Figure 50 shows the timing diagram of the receive SGMII interface on the GPY112. It is referred to by Table 67, which specifies the timing requirements. Note that the integrated SGMII operates using a CDR (Clock and Data Recovery), and therefore does not require the 625 MHz differential receive clock. Consequently, there are no timing requirement related to this clock.

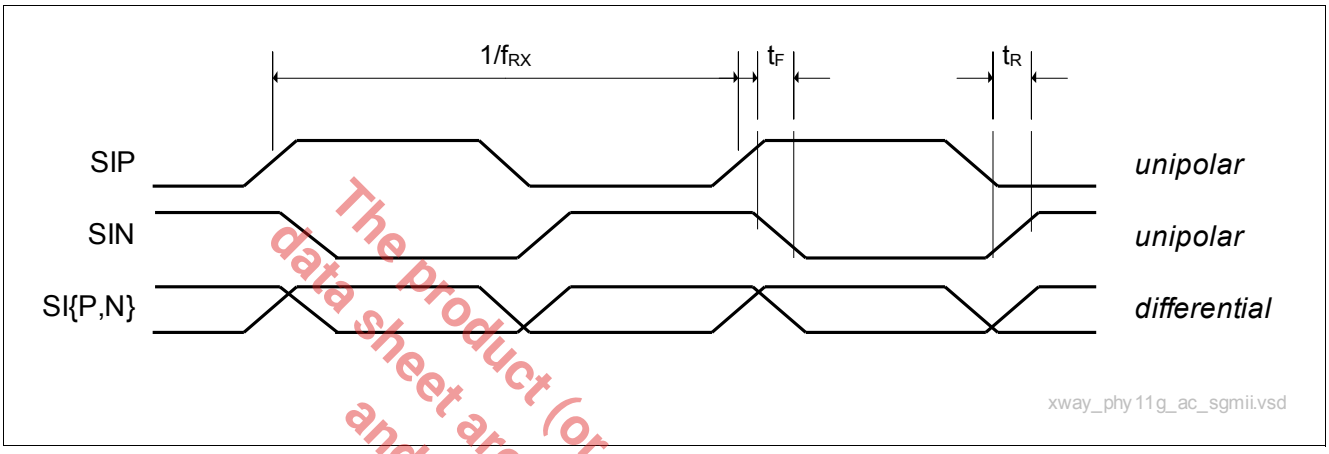

Figure 50 Receive Timing Diagram of the SGMII

Table 67 Receive Timing Characteristics of the SGMII

Parameter	Symbol	Values			Unit	Note / Test Condition
		Min.	Typ.	Max.		
Receive data rate	f_{RX}	-50 ppm	1250.0	+ 50 ppm	Mbit/s	–
Receive data jitter tolerance	J_{RX}	–	–	500	ps	–
Receive signal rise time	t_R	–	–	300	ps	20%→80%
Receive signal fall time	t_F	–	–	300	ps	80%→20%
Input differential voltage	V_{ID}	50	–	500	mV	Peak-amplitude
Input impedance (single-ended)	R_I	40	–	60	Ω	–
Input impedance (differential)	R_I	80	–	120	Ω	–

The product (or products) mentioned in this data sheet are no longer being manufactured and may not be ordered (OBS)

6.6.11 1000BASE-X Interface

This section describes the AC characteristics of the 1000BASE-X interface on the GPY112. This interface conforms to the specifications given in IEEE802.3, clause 36 (see [1]). The 1000BASE-X interface can operate at 1.25 Gbaud. The net data-rate is 1000 Mbit/s.

Also note that Chapter 6.9.7 describes the external circuitry.

6.6.11.1 Transmit Timing Characteristics

Figure 51 shows the timing diagram of the transmit 1000BASE-X interface on the GPY112. It is referred to by Table 68, which specifies the timing requirements.

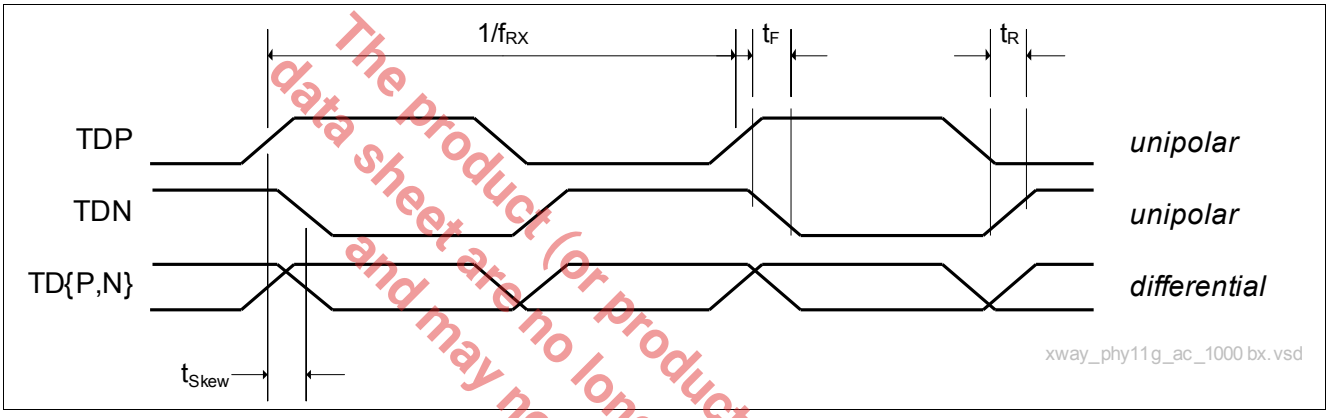

Figure 51 Transmit Timing Diagram of the 1000BASE-X Interface

Table 68 Transmit Timing Characteristics of the 1000BASE-X Interface

Parameter	Symbol	Values			Unit	Note / Test Condition
		Min.	Typ.	Max.		
Transmit data rate	f_{RX}	-50 ppm	1250.0	+ 50 ppm	Mbit/s	–
Transmit rise time	t_R	100	–	200	ps	20%→80%
Transmit fall time	t_F	100	–	200	ps	80%→20%
Output data jitter	J_{TX}	–	–	240	ps	Peak-peak[1)]
Time skew between pairs	t_{Skew}	–	–	20	ps	–
Output differential voltage	V_{OD}	150	250	500	mV	Peak-peak amplitude
Output voltage ringing	V_{ring}	–	–	10	%	–
Output impedance (single-ended)	R_O	40	–	60	Ω	–
Output impedance (differential)	R_O	80	–	120	Ω	–
Delta output impedance	dR_O	–	–	10	%	–

1) Assuming BER = 1e-12 and tracking BW = 1 MHz

The product (or products) mentioned in this data sheet are no longer being manufactured and may not be ordered (OBS)

6.6.11.2 Receive Timing Characteristics

Figure 52 shows the timing diagram of the receive 1000BASE-X interface on the GPY112. It is referred to by Table 69, which specifies the timing requirements.

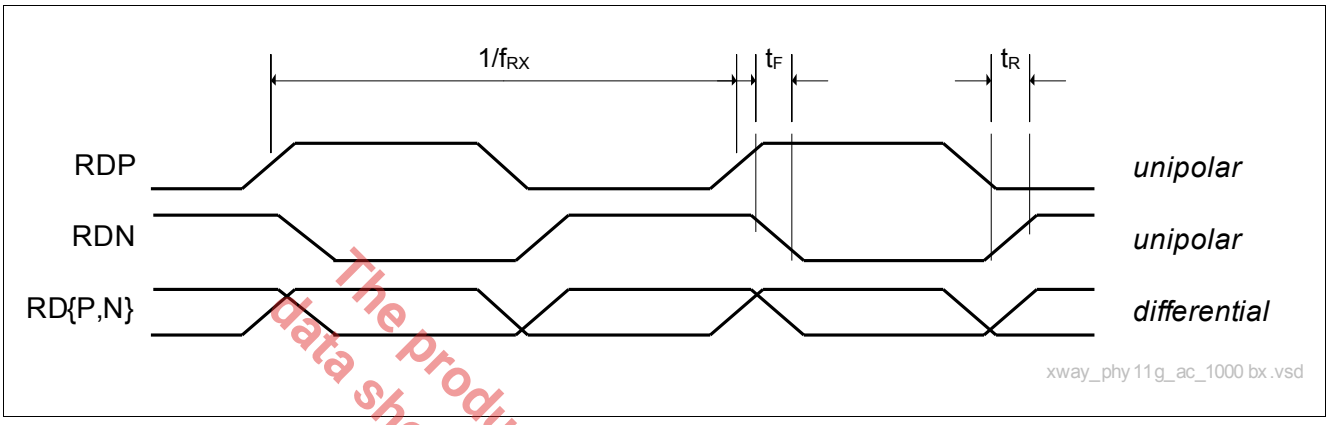

Figure 52 Receive Timing Diagram of the 1000BASE-X

Table 69 Receive Timing Characteristics of the 1000BASE-X

Parameter	Symbol	Values			Unit	Note / Test Condition
		Min.	Typ.	Max.		
Receive data rate	f_{RX}	-50 ppm	1250.0	+ 50 ppm	Mbit/s	–
Receive data jitter tolerance	J_{RX}	–	–	500	ps	–
Receive signal rise time	t_R	–	–	300	ps	20%→80%
Receive signal fall time	t_F	–	–	300	ps	80%→20%
Input differential voltage	V_{ID}	50	–	500	mV	Peak-amplitude
Input impedance (single-ended)	R_I	40	–	60	Ω	–
Input impedance (differential)	R_I	80	–	120	Ω	–

The product (or product(s) mentioned in this data sheet are no longer being manufactured and may not be ordered (OBS)

6.6.12 Twisted-Pair Interface

The AC characteristics for the TPI on pins VxpA, VxnA, VxpB, VxnB, VxpC, VxnC, VxpD and VxnD are specified in [1] and [4]. Since the GPY112 conforms to these standards, the values and limits specified there apply to this specification as well.

6.7 Power Consumption

Table 70 specifies the typical power consumption of the GPY112 (PEF7072HLV16) under various operating modes and line lengths (with each power domain's current consumption listed individually). The 1.0 V is assumed to be generated with an external DCDC converter. The length of the Ethernet cable is 3 m, unless otherwise mentioned.

Table 70 Power Consumption with VDDH and VDDP Set to 2.5 V, VDDC and VDDL Set to 1.0 V

Operating Mode (Mbit/s)	VDDP 2.5 V (mA)	VDDL 1.0 V (mA)	VDDC 1.0 V (mA)	VDDH 2.5 V (mA)	Power (mW)
Reset	2.0	2.0	10.0	8.0	40.0
Power Down	2.0	4.0	20.0	8.0	50.0
No link	2.0	21.0	40.0	13.0	99.0
10 Mbps (Idle)	2.0	16.0	42.0	16.0	104.0
10 Mbps (Run)	2.0	16.0	43.0	20.0	114.0
100 Mbps (Idle)	3.0	22.0	51.0	31.0	158.0
100 Mbps (Idle, EEE)	3.0	22.0	45.0	20.0	124.0
100 Mbps (Run)	4.0	22.0	51.0	31.0	160.0
1000 Mbps (Idle)	9.0	72.0	150.0	60.0	396.0
1000 Mbps (Idle, EEE)	9.0	70.0	80.0	26.0	238.0
1000 Mbps (Run)	10.0	72.0	150.0	60.0	400.0
1000 Mbps (Run, 100m)	10.0	75.0	211.0	60.0	460.0

The product(or products) mentioned in this data sheet are no longer being manufactured and may not be ordered (OBS)

6.8 Isolation Requirements

The GPY112 meets the isolation requirements specified in [1], clause 14.7.2.4 and clause 40.6.1.1, as well as in [4] clause 8.4.

6.9 External Circuitry

This chapter specifies the component characteristics of the external circuitry connected to the GPY112.

6.9.1 Crystal

In case no external reference clock (as described in **Chapter 6.6.3**) is available, the device must generate its own self-contained clock using an external crystal (parallel resonator) connected to XTAL1 and XTAL2. The internal crystal oscillator internally generates a reference clock which conforms to the specification defined in **Chapter 6.6.3**, as long as the component specification outlined in this section is satisfied. In order to specify the crystal, an equivalent circuit is shown in **Figure 53**. This circuit is referred to by the component characteristics specification given in **Table 71**.

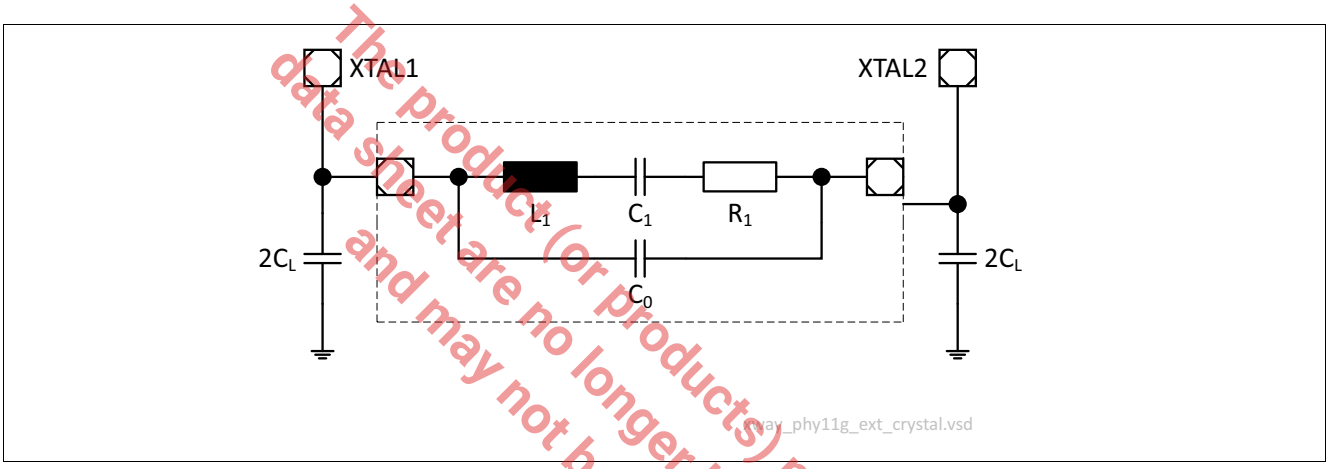

Figure 53 Equivalent Circuit for Crystal Specification

Table 71 Electrical Characteristics for Supported Crystals

Parameter	Symbol	Values			Unit	Note / Test Condition
		Min.	Typ.	Max.		
Main resonant frequency	f_{Res}	–	25		MHz	–
Total frequency stability[1)]		-50	0	+50	ppm	–
Temperature range	T	-40	–	+85	°C	–
Series capacitance	C_1	–	15	30	fF	–
ESR	R_1	–	30	70	Ω	–
Shunt capacitance	C_0	–	–	7	pF	–
Load capacitance	$2C_L$	–	33.0	–	pF	–
Drive level	P_{drive}	0.1	–	–	mW	–

1) Refers to the sum of all effects, e.g. general tolerances, aging, temperature dependency

The product (or products) mentioned in this data sheet are no longer being manufactured and may not be ordered (OBS)

6.9.2 LED

This section specifies the electrical characteristics of the LEDs which are supported. Note that the requirements specified here are given to guarantee proper operation of the pin-strapping (Chapter 3.4.1), which shares the LED pins. Nevertheless, the requirements are selected to fit almost every LED available on the target market.

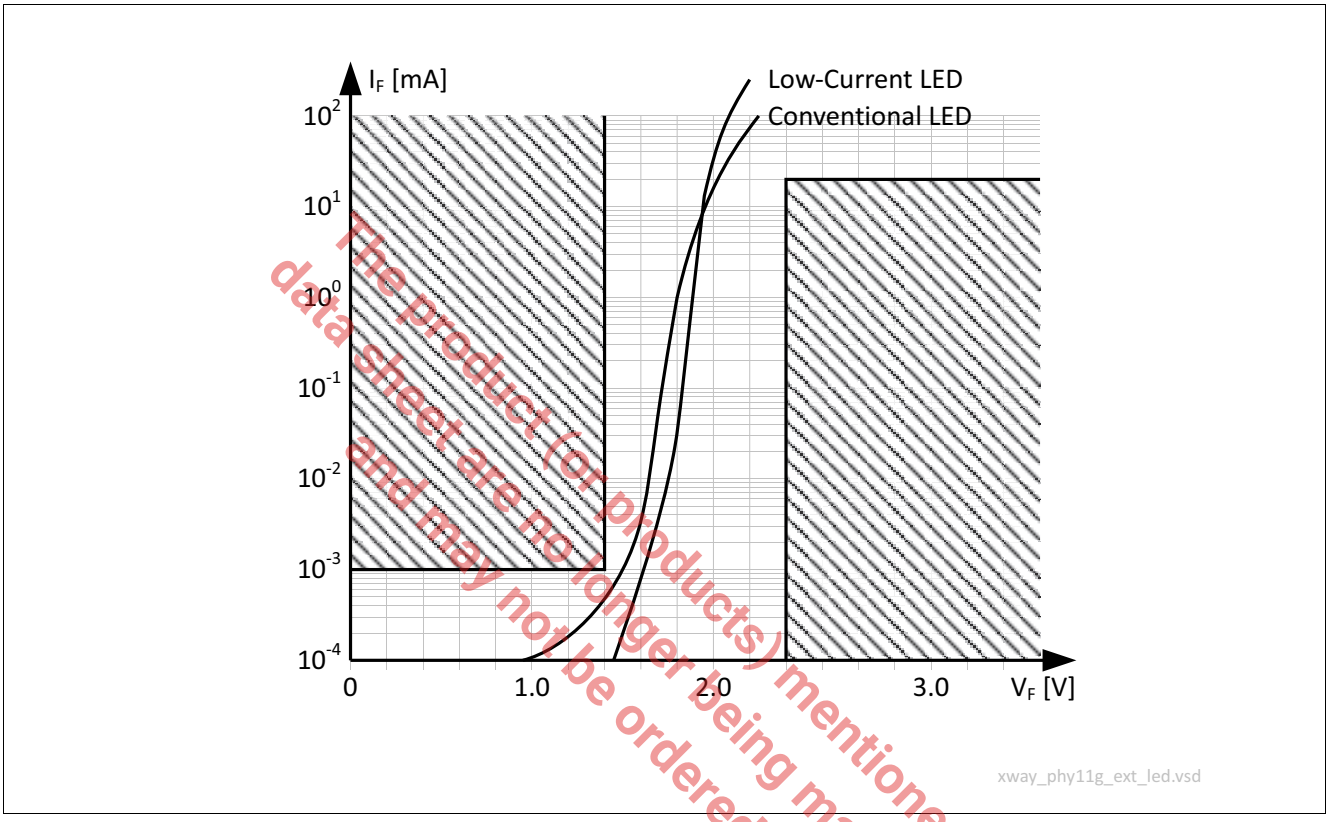

Figure 54 Tolerance Graph for the Forward Current Versus Voltage of the Supported LEDs

The product (or products) mentioned in this data sheet are no longer being manufactured and may not be ordered (OBS)

Note that LED devices also significantly contribute to the system power consumption. A conventional LED has an operating point of $V_F \approx 2.0$ V and $I_F \approx 20.0$ mA. This results in a power consumption of 40 mW per LED. Three LEDs would consume up to 120 mW, which is already as high as 30% of the maximum power consumption of the entire GPY112 device. Using low-current LEDs would improve this figure to 12 mW, that is, only 3% of the device power consumption. Figure 54 shows a tolerance graph with typical U-I characteristics of the supported LED types. The tolerance values referred to by this figure are listed in Table 72.

Table 72 Electrical Characteristics for Supported LEDs

Parameter	Symbol	Values			Unit	Note / Test Condition
		Min.	Typ.	Max.		
Temperature range	T	-40.0	–	+85.0	°C	–
Forward current	I_F	–	–	1.0	µA	$V_F \leq 1.4$ V
Forward current (low-current LEDs)[1)]	I_F	–	2.0	–	mA	$1.4 \text{ V} \leq V_F \leq 2.5$ V
Forward current (conventional LEDs)	I_F	–	20.0	–	mA	$1.4 \text{ V} \leq V_F \leq 2.5$ V
Forward voltage (nominal)	V_F	1.6	1.9	2.2	V	Nominal forward voltage, where LED is emitting light

1) Low-current LEDs are preferred in order to reduce the system power consumption.

6.9.3 Transformer (Magnetics)

This section specifies the electrical characteristics of the transformer[1)] devices that are supported. The specifications listed here guarantee proper operation according to IEEE 802.3 [1]. A typical Gigabit Ethernet capable transformer device is depicted in Figure 55. Table 73 lists the characteristics of the supported transformer devices. Note that these characteristics represent the bare minimum for achieving standard performance. Since the transformer significantly impacts the link performance, it is possible to increase the loop reach by selecting transformers with improved parameters.

Note that the IC-side center taps of the transformer must not be connected and should be left open. In particular, transformer types which short all IC-side center taps together must not be used.

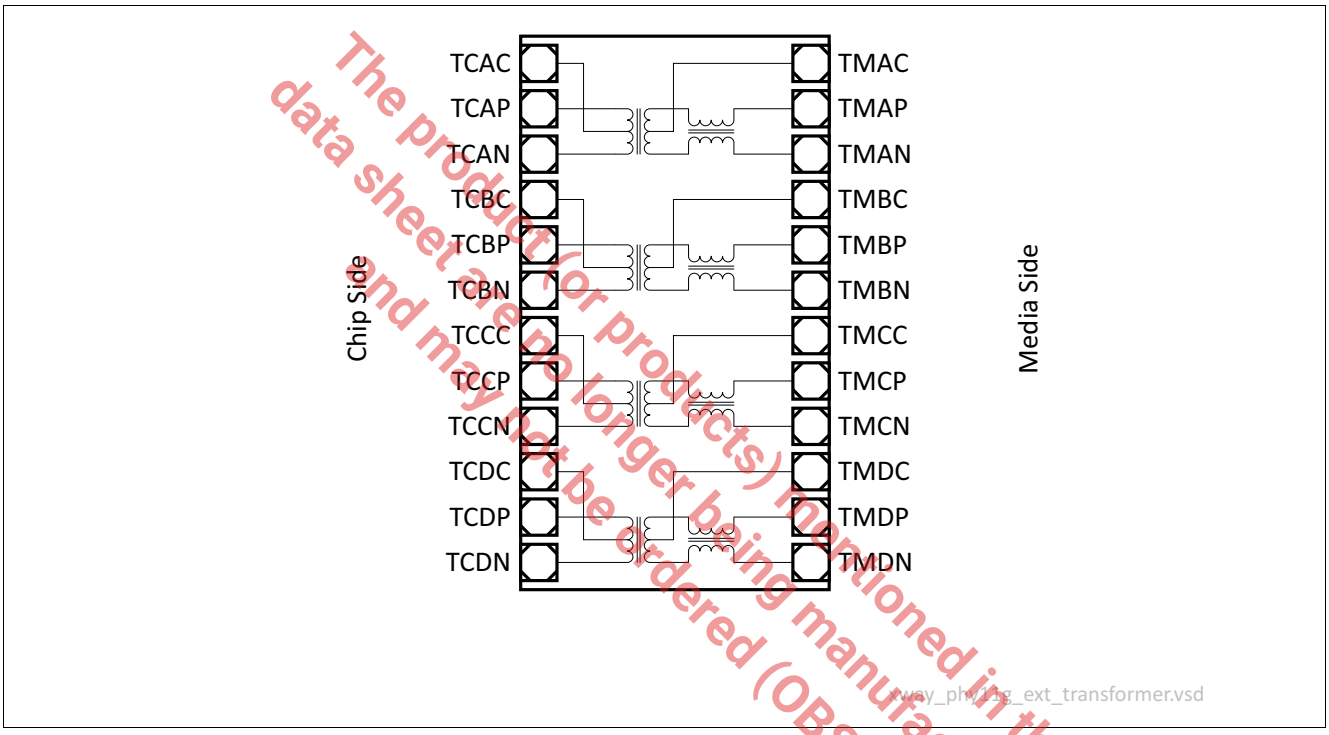

The product(s) mentioned in this data sheet are no longer being manufactured and may not be ordered (OBS)

Figure 55 Schematic of a Typical Gigabit Ethernet Transformer Device

Table 73 Electrical Characteristics for Supported Transformers (Magnetics)

Parameter	Symbol	Values			Unit	Note / Test Condition
		Min.	Typ.	Max.		
Turns ratio	1:tr	0.95	1.00	1.05		±5%
Differential-to-common-mode rejection	DCMR	43	–	–	dB	30 MHz
		37	–	–	dB	60 MHz
		33	–	–	dB	100 MHz
Crosstalk attenuation	CTA	45	–	–	dB	30 MHz
		40	–	–	dB	60 MHz
		35	–	–	dB	100 MHz
Insertion loss	IL	–	–	1	dB	0.1 MHz ≤ f ≤ 100 MHz

1) Also often referred to as “magnetics”.

Table 73 Electrical Characteristics for Supported Transformers (Magnetics) (cont'd)

Parameter	Symbol	Values			Unit	Note / Test Condition
		Min.	Typ.	Max.		
Return loss	RL	18.0	–	–	dB	1 MHz ≤ f ≤ 30 MHz
		14.0	–	–	dB	31 MHz ≤ f ≤ 40 MHz
		13.0	–	–	dB	41 MHz ≤ f ≤ 50 MHz
		12.0	–	–	dB	51 MHz ≤ f ≤ 80 MHz
		10.0	–	–	dB	81 MHz ≤ f ≤ 100 MHz

6.9.4 RJ45 Plug

Table 74 describes the electrical characteristics of the RJ45 plug to be used in conjunction with the GPY112.

Table 74 Electrical Characteristics for Supported RJ45 Plugs

Parameter	Symbol	Values			Unit	Note / Test Condition
		Min.	Typ.	Max.		
Crosstalk attenuation	CTA	45	–	–	dB	30 MHz
		40	–	–	dB	60 MHz
		35	–	–	dB	100 MHz
Insertion loss	IL	–	–	1	dB	1 MHz ≤ f ≤ 100 MHz
Return loss	RL	25.0	–	–	dB	1 MHz ≤ f ≤ 100 MHz

The product (or products) mentioned in this datasheet are no longer being manufactured and may not be ordered (OBS)

6.9.5 Twisted-Pair Common-Mode Rejection and Termination Circuitry

This section describes the external circuitry which is required to properly terminate the common mode of the Twisted-Pair Interface (TPI). Also, these external components are required to perform proper rejection of alien disturbers which are injected into the common mode of the TPI. **Figure 56** shows a typical external circuit, and in particular the common-mode components. **Table 75** defines the component values and their supported tolerances.

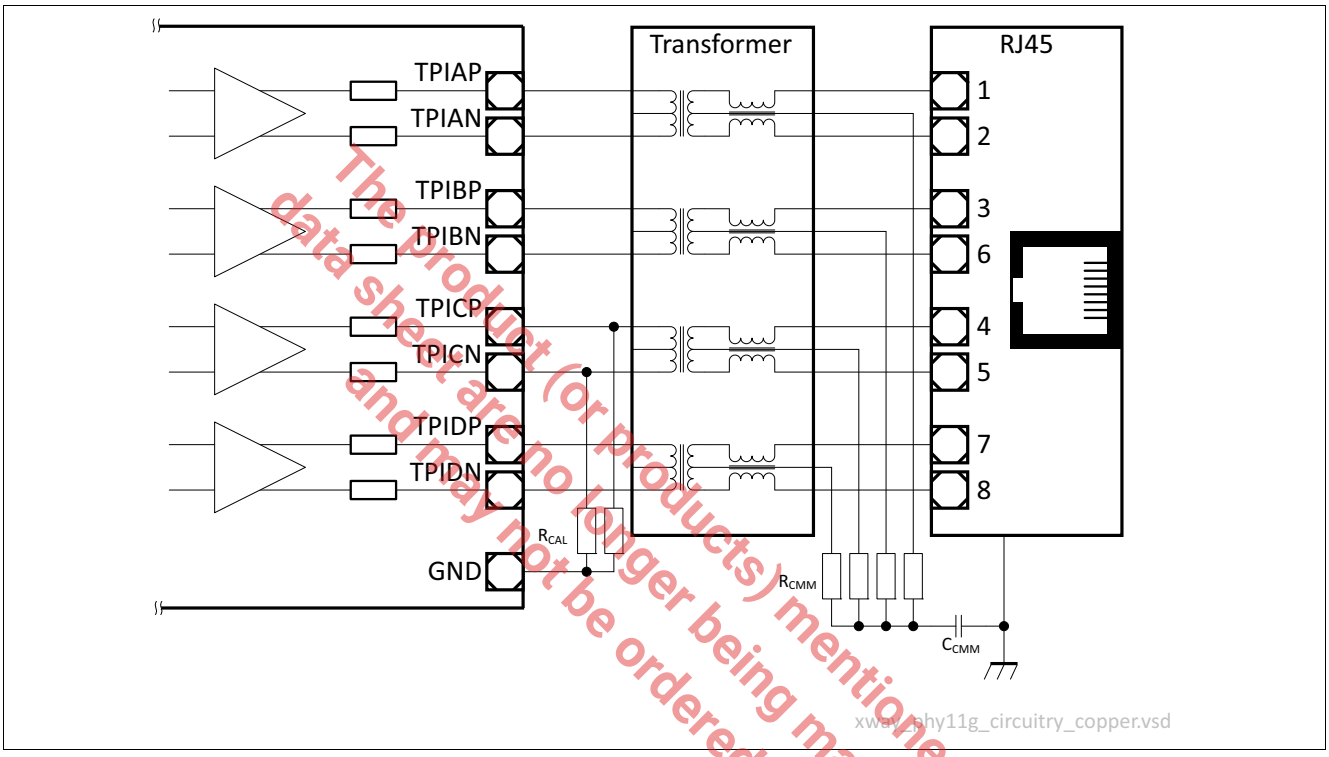

Figure 56 Twisted-Pair Common-Mode Rejection and Termination Circuitry

The product (or products) mentioned in this data sheet are no longer being manufactured and may not be ordered (OBS)

Table 75 Electrical Characteristics for supported Transformers (Magnetics)

Parameter	Symbol	Values			Unit	Note / Test Condition
		Min.	Typ.	Max.		
Common-mode de-coupling capacitance (media end)	C_{CMM}	800	1000	1200	pF	±20%, 2 kV
Common-mode termination resistance (media end)	R_{CMM}	80	75	70	Ω	±10%
Calibration resistor	R_{CAL}	15840	16000	16160	Ω	±1%

6.9.6 SGMII Interface

Figure 57 shows the external analog circuitry that may be used to properly set up an SGMII MAC-to-PHY connection. All optional circuitry is considered. Since the GPY112 fully implements CDR (Clock and Data Recovery) functionality, it is not required to connect the MAC source clock. However, it may be required to wire the PHY source clock, in case the MAC does not implement CDR. If the MAC supports CDR, the elements shaded in dark gray in the figure may be omitted. The GPY112 does not directly generate the defined common-mode offset voltage of 1.2 V, since this is not required for an AC-coupled interface. If a MAC requires this offset voltage for proper DC-coupled operation, this offset can be injected using the resistive dividers (R_1 and R_2) marked by the regions shaded in light gray in the figure. If the MAC is purely AC-coupled, these components can be omitted. Also the MAC may have properly terminated inputs, and therefore the termination resistors R_3 are not necessary. Component values for this type of circuit are defined in Table 76. The simplest circuitry is used when the GPY112 is connected to a MAC with CDR and AC-coupled, well-terminated differential pins. This configuration is shown in Figure 58.

The product (or products) mentioned in this data sheet are no longer being manufactured and may not be ordered (OBS)

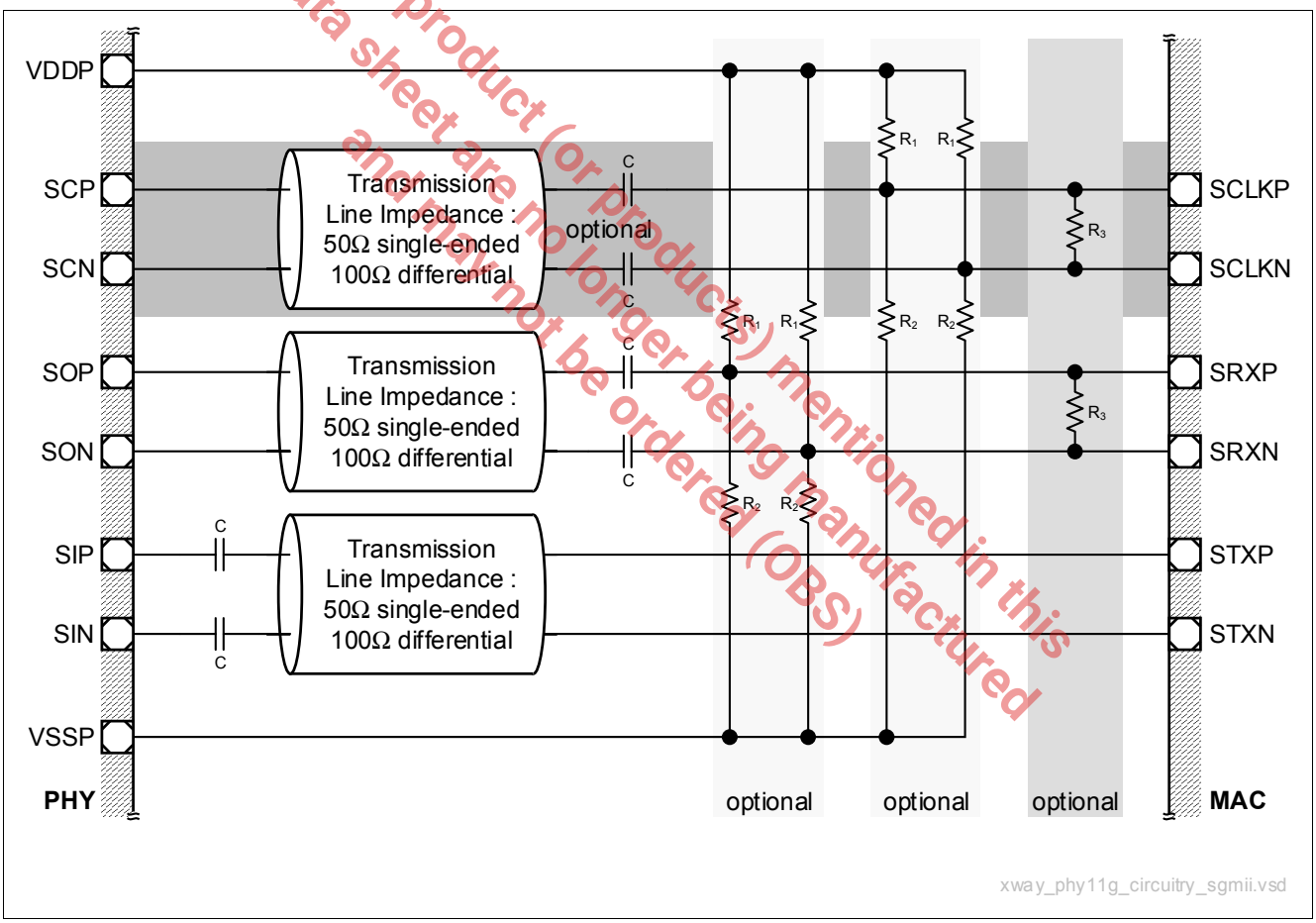

Figure 57 External Circuitry for SGMII

Table 76 Electrical Characteristics for the SGMII External Components

Parameter	Symbol	Values			Unit	Note / Test Condition
		Min.	Typ.	Max.		
BIAS resistance 1	R_1	-10%	1k	+10%	Ω	VDDP = 3.3 V
		-10%	1k	+10%	Ω	VDDP = 2.5 V

Table 76 Electrical Characteristics for the SGMII External Components (cont'd)

Parameter	Symbol	Values			Unit	Note / Test Condition
		Min.	Typ.	Max.		
BIAS resistance 2	R_2	-10%	1.7k	+10%	Ω	VDDP = 3.3 V
		-10%	1.1k	+10%	Ω	VDDP = 2.5 V
Termination resistance	R_3	-10%	100	+10%	Ω	
Coupling capacitance	C	-10%	100	+10%	nF	

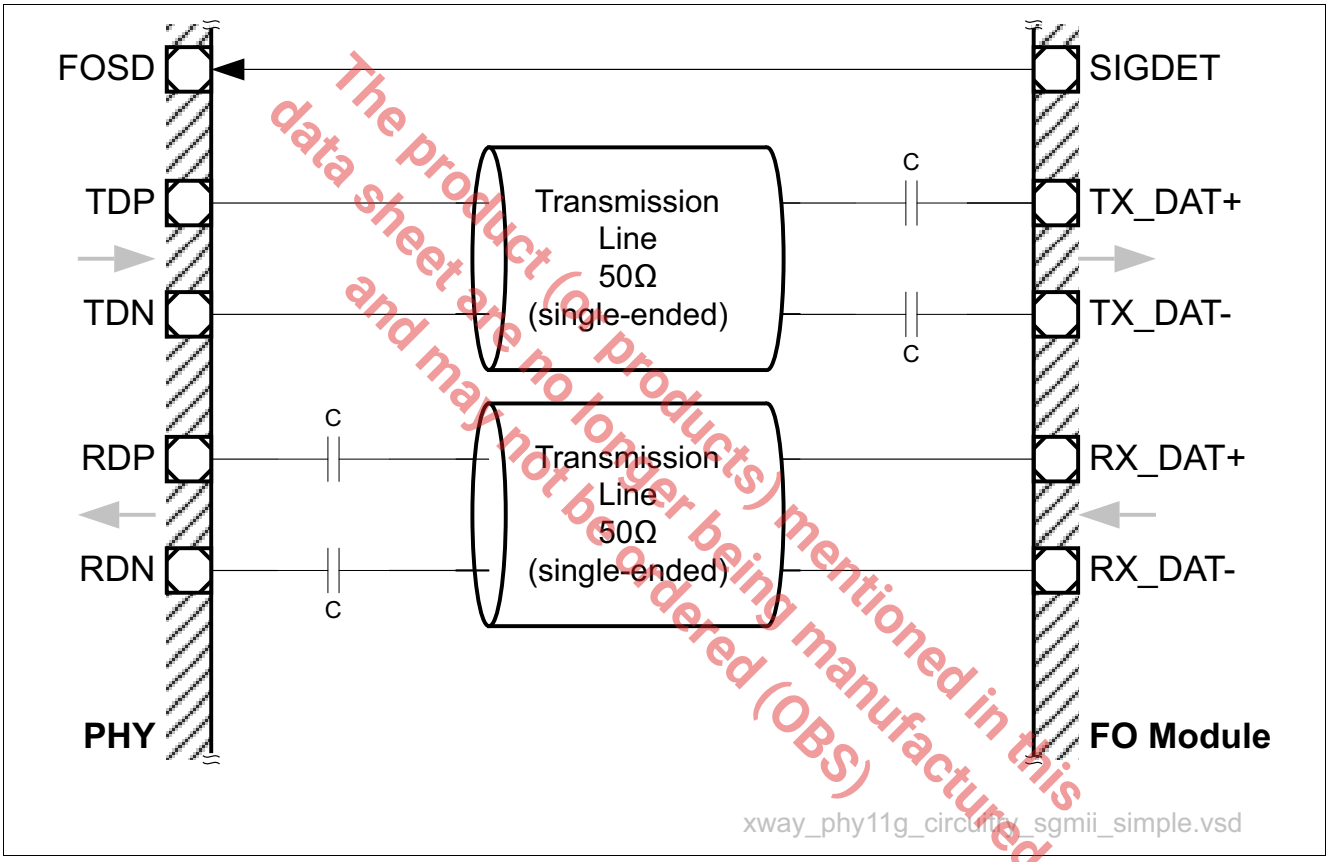

The product (or products) mentioned in this data sheet are no longer being manufactured and may not be ordered (OBS)

Figure 58 Simplified External Circuitry for SGMII

6.9.7 1000BASE-X Interface

Figure 59 depicts the external analog circuitry that may be used to properly set up a 1000BASE-X PHY-to-FO connection. There are FO modules available that already integrate all coupling circuitry components, in which case a straight connection is sufficient and the external coupling caps may be omitted. Component values for this type of circuit are defined in Table 77. Many FO modules have open-drain outputs, which can cause conflict with the weak pull-down nature of the SIGDET pin. In such cases, a pull-up resistor R_{pu} should be included to weakly pull the SIGDET signal to V_{DDP} in a high-impedance situation. This is shown in Figure 59 by the area shaded in gray.

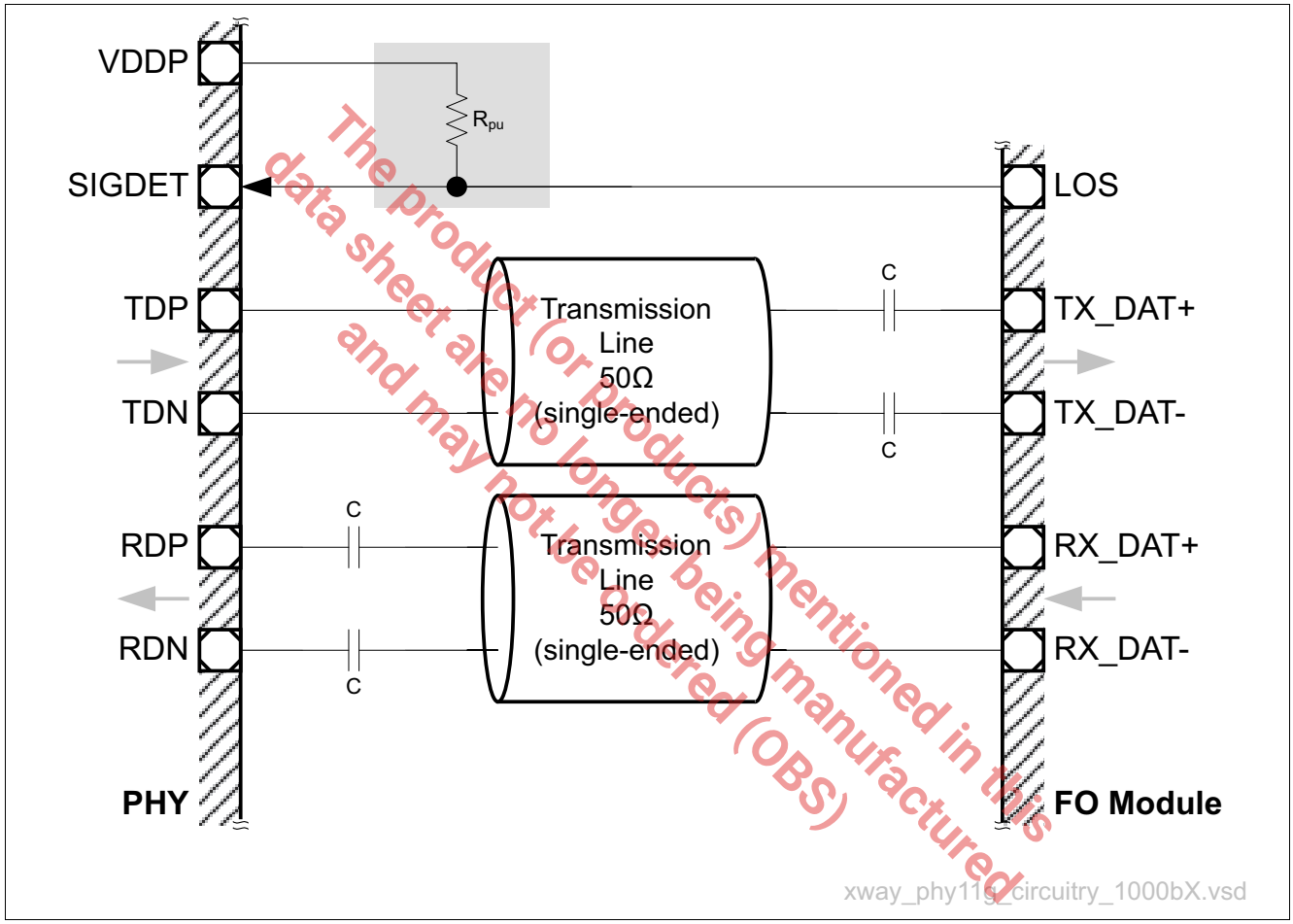

The product (or products) mentioned in this data sheet are no longer being manufactured and may not be ordered (OBS)

Figure 59 External Circuitry for a 1000BASE-X Interface

Table 77 Electrical Characteristics for the 1000BASE-X External Components

Parameter	Symbol	Values			Unit	Note / Test Condition
		Min.	Typ.	Max.		
Coupling capacitance	C	90	100	110	nF	±10%
Pull-up resistance	R_{pu}	1	–	–	kΩ	±10%

6.10 JTAG Interface Timing

The timing requirement for JTAG interface is shown in Table 78 and the timing diagram illustrated in Figure 60. The JTAG reset signal TRST is not listed since it is internally generated by the DCDC converter.

Table 78 JTAG Interface Timing

Parameter	Symbol	Values			Unit	Note / Test Condition
		Min.	Typ.	Max.		
TCK clock period	t_{TCK}	100	–	–	ns	–
TCK clock duty cycle	$t_{TCKr/f}/t_{TCK}$	40	–	60	%	–
TCK clock rise time	t_{TCKr}	–	–	5	ns	–
TCK clock fall time	t_{TCKf}	–	–	5	ns	–
TMS setup time from TCK	t_{TMSs}	10	–	–	ns	–
TMS hold time from TCK	t_{TMSh}	15	–	–	ns	–
TDO delay time from TCK	t_{TDOd}	–	–	30	ns	–
TDI setup time from TCK	t_{TDIs}	10	–	–	ns	–
TDI hold time from TCK	t_{TDIh}	15	–	–	ns	–

The product (or products) mentioned in this data sheet are no longer being manufactured and may not be ordered (OBS)

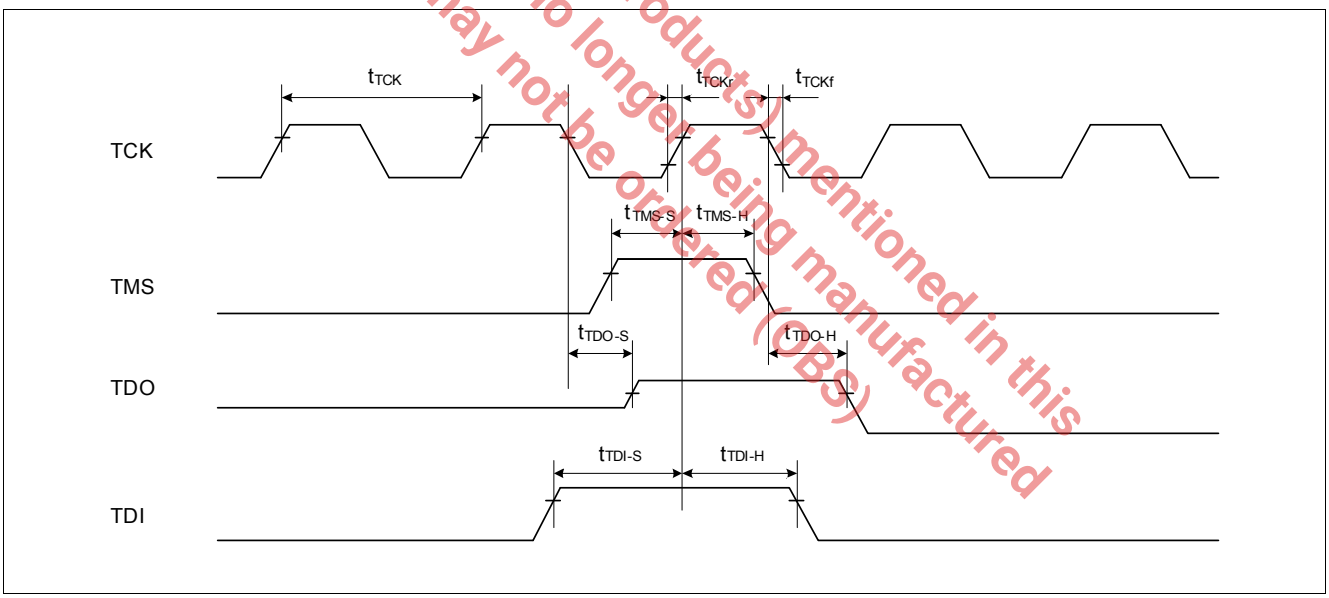

Figure 60 JTAG Timing Definition

7 Package

This section outlines all relevant packaging information.

7.1 Package Outline

The device is available in a 64-pin Low-Profile Quad Flat Package (LQFP) with an exposed pad (EPAD). The pad pitch is 0.5 mm and the size of the EPAD is 4 x 4 mm. The EPAD is used as the common ground and must be connected to the PCB ground plane. The package is a lead-free “green package” and its exact name for reference is PG-LQFP-64.

Figure 61 illustrates the top, side and bottom dimension drawings of the PG-LQFP-64 package.

The product (or products) mentioned in this data sheet are no longer being manufactured and may not be ordered (OBS)

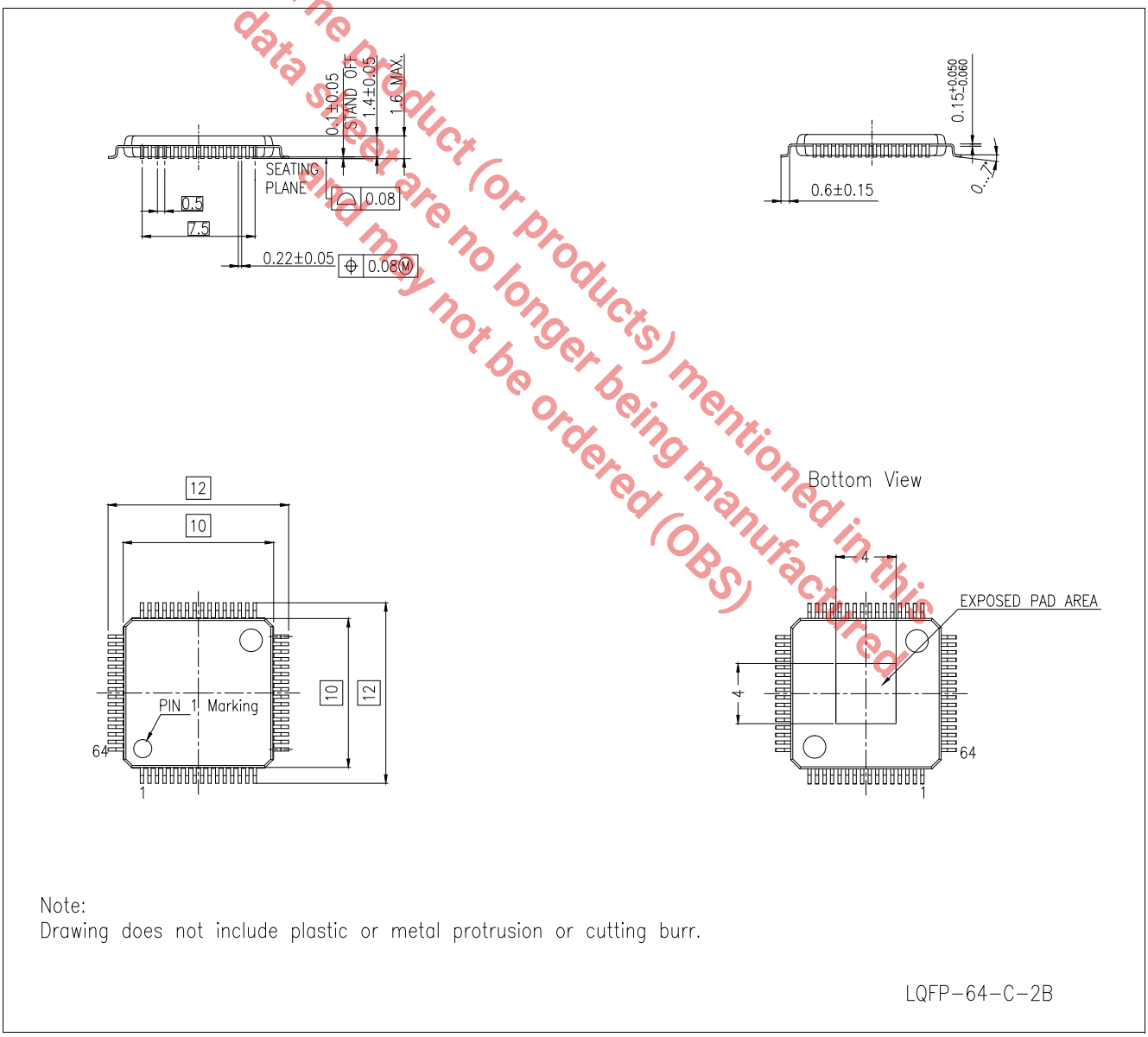

Figure 61 Package Outline Drawing of the PG-LQFP-64 Package

Package description, package handling, PCB and board assembly information is available on request.

7.2 Chip Identification and Package Naming

Figure 62 shows the marking pattern on the GPY112 (PEF7072HLV16) device.

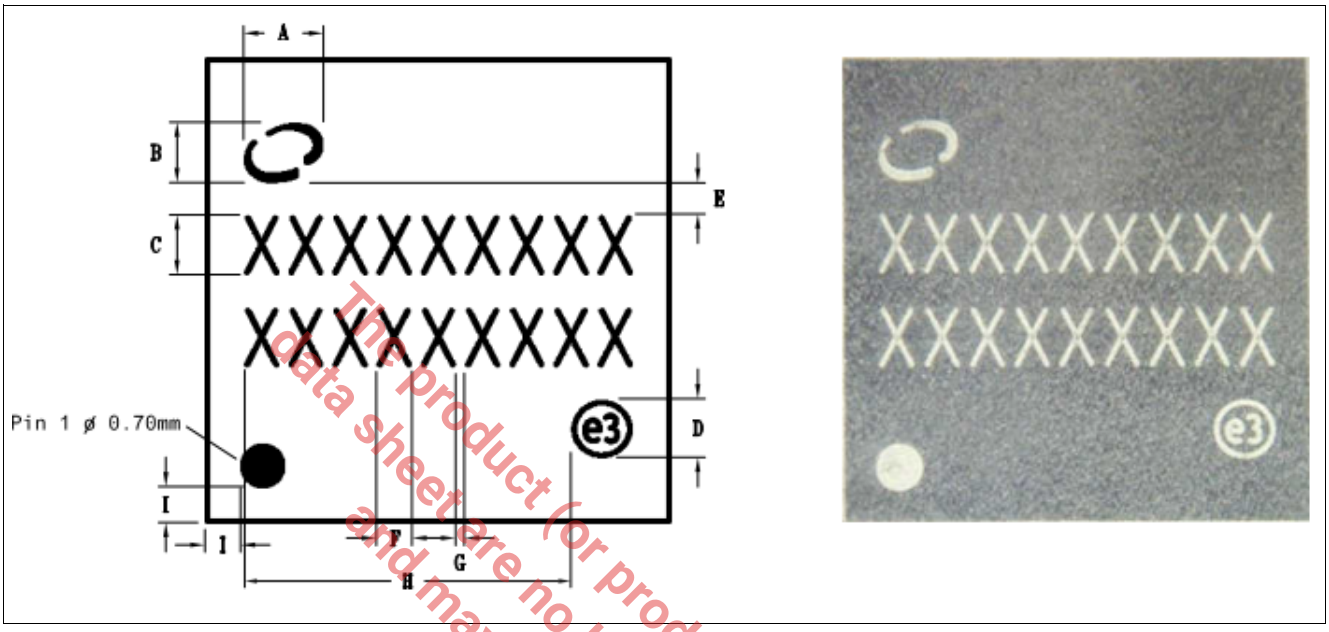

Figure 62 Chip Marking of PG-LQFP-64

Table 79 explains the chip marking information and Table 80 provides product and package naming.

Table 79 Chip Marking Pattern

Marking	Description
Text Line 1 (Logo)	INTEL - Swirl
Text Line 2 (FPO#)	<acc. to assembly lot marking instruction>
Text Line 3 (S-SPEC#)	See Table 80
Text Line 4 (Pb-free symbol)	e3

Table 80 Product and Package Naming

Product Name	Product Type	S-SPEC#	Package
GPY112	PEF7072HLV16	SLLHN	PG-LQFP-64

The product (or products) mentioned in this data sheet are no longer being manufactured and may not be ordered (OBS)

7.3 Thermal Resistance

The thermal resistance values given below were determined in accordance with JEDEC specifications.

They are valid for an ambient temperature T_A = 85°C and a maximum device power dissipation of 400 mW (see **Chapter 6.7**). Sustained operation of the device with the internal junction temperature above 125°C will reduce the lifetime of the device and/or cause device failure.

Table 81 Thermal Resistance of the PG-LQFP-64 Package

Parameter	Symbol	Values			Unit	Note / Test Condition
		Min.	Typ.	Max.		
Junction to ambient	$R_{th, JA}$	– – –	37.3 45.6 66.4	– – –	K/W	2s2p + vias 2s2p 1s0p Free convection and radiation
Junction to top of package	Ψ_{JT}	– – –	8.7 8.9 9.5	– – –	K/W	2s2p + vias 2s2p 1s0p
Junction to case (bottom)	$R_{th, JCbot}$	–	14.44	–	K/W	2s2p + vias Diepad bottom fixed to T_A
Junction to case (top)	$R_{th, JCtop}$	–	28.68	–	K/W	2s2p + vias Package top fixed to T_A

The product (or products) mentioned in this data sheet are no longer being manufactured and may not be ordered (OBS)

References

[1] IEEE 802.3-2008: “Carrier sense multiple access with collision detection (CSMA/CD) access method and physical layer specifications”, IEEE Computer Society, December 2008

[2] IEEE 802.3az, Amendment 5: “Media Access Control Parameters, Physical Layers, and Management Parameters for Energy-Efficient Ethernet”, September 2010

[3] IEEE 802.3at, Amendment 3: “Data Terminal Equipment (DTE) Power via the Media Dependent Interface (MDI) Enhancements”, October 2009

[4] ANSI X3.263-1995: “Fiber Distributed Data Interface (FDDI) - Token Ring Twisted Pair Physical Layer Medium Dependent (TP-PMD)”, ANSI, 1995

[5] ANSI TIA/EIA-568-A:1995

[6] ISO/IEC 11801:1995

[7] IEC 60950:1991 (General Safety)

[8] IEEE Std 1149.1-2001: “IEEE Standard Test Access Port and Boundary-Scan Architecture”, IEEE/ANSI, 2001

[9] Hewlett Packard, “Reduced Gigabit Media Independent Interface (RGMII)”, Version 1.3, 12.10.2000

[10] Hewlett Packard, “Reduced Gigabit Media Independent Interface (RGMII)”, Version 2.0, 04.01.2002

[11] RMII Consortium, “RMII-Specification”, Rev 1.2, 1997

[12] SFF Committee, “SFF-8053 Specification for GBIC (Gigabit Interface Converter)”, Rev 5.5, September 27, 2000

[13] CISCO Systems, “Serial GMII - Specification”, July 2001, Rev. 1.7

[14] AMD, White Paper on “Magic Packet Technology”, White Paper, (c) 1998, Advance Micro Devices

[15] Intel® Universal Gateway Software 6.1 Power Saving Method Application Note Rev. 1.0

The product (or products) mentioned in this datasheet are no longer being manufactured and may not be ordered (OBS)

Terminology

A

ADS	Auto-Downspeed
ANEG	Auto-Negotiation
ANSI	American National Standards Institute

B

BER	Bit Error Rate
BW	Bandwidth

C

CAT5	Category 5 Cabling
CCR	Configuration Content Record
CDR	Clock and Data Recovery
CRC	Cyclic Redundancy Check
CSR	Configuration Signature Record
CRS	Carrier Sense

D

DEC	Digital Echo Canceler

E

ECM	Externally Controlled Mode (LED)
EEE	Energy-Efficient Ethernet
EEPROM	Electrically Erasable Programmable ROM
EMI	Electro-Magnetic Interference
ESD	Electro-Static Discharge

F

FO	Fiber-Optic

G

GbE	Gigabit Ethernet
GBIC	Gigabit Interface Converter
GMII	Gigabit Media-Independent Interface
GPIO	General Purpose Input/Output

H

HBM	Human Body Model
HSTL	High-Speed Transceiver Logic
HYB	Hybrid

I

I^2C	Internally Integrated Circuit Interface (also I2C)
IC	Integrated Circuit
ICM	Internally Controlled Mode (LED)
IEEE	Institute of Electrical and Electronics Engineers

The product (or products) mentioned in this datasheet are no longer being manufactured and may not be ordered (OBS)

IPG	Inter-Packet Gap
J	
JTAG	Joined Test Action Group
L	
LAN	Local Area Network
LED	Light Emitting Diode
LPI	Low Power Idle
LSB	Least Significant Bit
M	
MAC	Media Access Controller
MDI	Media-Dependent Interface
MDIO	Management Data Input/Output
MDIX	Media-Dependent Interface Crossover
MII	Media-Independent Interface
MMD	MDIO Manageable Device
MoCA	Multimedia over Coax Alliance
MSB	Most Significant Bit
N	
NAS	Network Attached Storage
NP	Next Page
O	
OSI	Open Systems Interconnection
OUI	Organizationally Unique Identifier
P	
PCB	Printed Circuit Board
PCS	Physical Coding Sublayer
PD	Powered Device
PHY	Physical Layer (device)
PICMG	PCI Industrial Computer Manufacturers Group
PLL	Phase-Locked Loop
PMA	Physical Media Attachment
PON	Passive Optical Network
PSE	Power-Sourcing Equipment
R	
RGMII	Reduced (pin-count) Gigabit Media-Independent Interface
RMII	Reduced (pin-count) Media-Independent Interface
RX	Receive
S	
SFP	Small Form-Factor Pluggable
SGMII	Serial Gigabit Media-Independent Interface

The product(or products) mentioned in this data sheet are no longer being manufactured and may not be ordered (OBS)

SMD	Surface-Mounted Device
SoC	System on Chip
T	
TAP	Test Access Port
TPG	Test-Packet Generator
TPI	Twisted-Pair Interface
TX	Transmit
V	
VQFN	Very Thin Quad Flat Non-leaded
W	
Wi-Fi	Wireless Local Area Network
WoL	Wake-on-LAN
X	
xMII	Symbolic shortening which denotes the set of supported MII Interfaces, e.g. RGMII and SGMII

The product (or products) mentioned in this data sheet are no longer being manufactured and may not be ordered (OBS)