SPX1585

Data Sheet

5A Low Dropout Fast Response Voltage Regulator

General Description

The SPX1585 is a very easy-to-use low-power 5A adjustable and fixed voltage regulator. It requires only two external resistors to set the output voltage for the adjustable version. The SPX1585 device is designed for low-voltage applications that offer lower dropout voltage and faster transient response. This device is an excellent choice for use in powering low-voltage microprocessors that require lower dropout and faster transient response to regulate from 2.5V to 3.8V supplies, and as a post-regulator for switching supplies applications. The SPX1585 features low dropout of a maximum of 1.2V.

The SPX1585 offers full protection against overcurrent faults, reversed input polarity, reversed load insertion, and positive and negative transient voltage. On-chip trimming adjusts the reference voltage to 1%. The I_Q of this device flows into the load, which increases efficiency.

The SPX1585 device is offered in a 3-pin TO-263 package compatible with other 3-terminal regulators.

Features

- Adjustable output down to 1.25V
- Output current of 5A
- Low dropout voltage 1.1V typ at 5A
- Extremely tight load and line regulation
- Current and thermal limiting
- Standard 3-terminal low-cost TO-263
- Compatible with industry standard *LT1085/LT1585*

Applications

- Microprocessor core and memory supplies
- Low-cost 3.3V, 2.5V, 1.8V, and 1.5V I/O power
- 5.5V to 5V conversion with high power supply rejection ratio (PSRR) isolation
- SMPS post-regulator
- High-efficiency linear power supplies
- Instrumentation
- Constant current regulators
- Battery charger

The product(s) for products) mentioned in this data sheet are no longer being manufactured and may not be ordered (OBS)

Typical Application

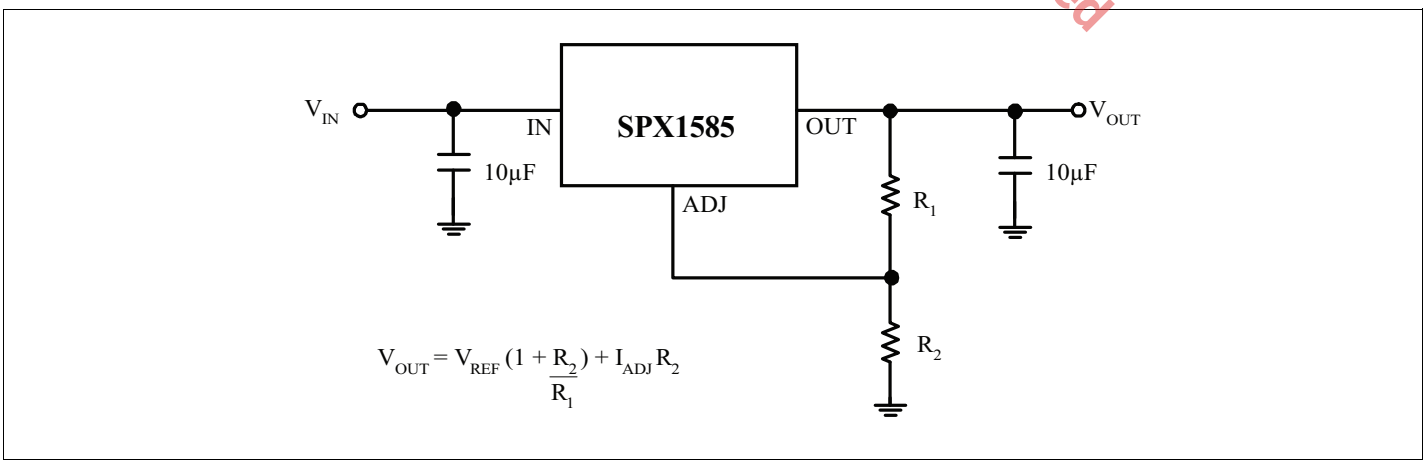

Figure 1: Typical Adjustable Regulator

Revision History

Revision	Release Date	Change Description
252DSR00	May 17, 2023	**Updated:** ■ New template applied, contents rewriting, and obsolete packages highlighted. ■ Subtitle of the document. ■ "General Description" section. ■ "Features" section. ■ "Applications" section. ■ "Specifications" section. ■ "Adjustable Regulator Best Practices" figure caption. ■ "Load Regulation" section. ■ In "Improving Ripple Rejection" figure, bold sentence replaced with a note placed below. ■ "Ordering Information" section. **Added:** ■ "Typical Application" section. ■ "Pin Information" section.
Rev1A	July 5, 2016	Legacy Exar data sheet.

The product (or products) mentioned in this data sheet are no longer being manufactured and may not be ordered (OBS)

Table of Contents

General Description ..... **i**
Features ..... **i**
Applications ..... **i**
Typical Application ..... **i**
Specifications **1**
Absolute Maximum Ratings 1
Thermal Specifications 1
Electrical Characteristics[1] 2
Pin Information **3**
Pin Configuration 3
Pin Description 3
Application Hints **4**
Stability 4
Ripple Rejection 4
Reducing Parasitic Resistance and Inductance 4
Thermal Consideration 4
Basic Adjustable Regulator 5
Output Voltage 5
Load Regulation 5
Output Voltage 5
Typical Applications Circuits **6**
Typical Performance Characteristics **7**
Ordering Information **8**

The product (or products) mentioned in this data sheet are no longer being manufactured and may not be ordered (OBS)

List of Figures

Figure 1: Typical Adjustable Regulator i
Figure 2: SPX1585 Pinout (Top View) 3
Figure 3: Basic Adjustable Regulator 5
Figure 4: Adjustable Regulator Best Practices 5
Figure 5: Basic Fixed Regulator 5
Figure 6: Current Output Regulator 6
Figure 7: Typical Adjustable Regulator 6
Figure 8: Improving Ripple Rejection 6
Figure 9: 5V Regulator with Shutdown 6
Figure 10: Load Regulation 7
Figure 11: Short Circuit Current 7
Figure 12: Adjustment Pin Current 7
Figure 13: Dropout Voltage 7
Figure 14: Temperature Stability 7
Figure 15: Minimum Operating Current 7

The product (or products) mentioned in this data sheet are no longer being manufactured and may not be ordered (OBS)

List of Tables

Table 1: Absolute Maximum Ratings 1
Table 2: Thermal Performance 1
Table 3: Electrical Characteristics 2
Table 4: Pin Description 3
Table 5: Ordering Information 8

The product (or products) mentioned in this data sheet are no longer being manufactured and may not be ordered (OBS)

Specifications

Absolute Maximum Ratings

Important: The stresses above what is listed under the following table may cause permanent damage to the device. This is a stress rating only—functional operation of the device above what is listed under the following table or any other conditions beyond what MaxLinear recommends is not implied. Exposure to conditions above the recommended extended periods of time may affect device reliability. Solder reflow profile is specified in the *IPC/JEDEC J-STD-020C* standard.

Table 1: Absolute Maximum Ratings

Parameter	Min	Max	Units
Lead Temperature (soldering, 10 seconds)	-	300	°C
Storage Temperature Range	–65	150	°C
Operating Junction Temperature Range			
SPX1585 Control Section	–45	125	°C
SPX1585 Power Transistor	–45	150	°C
Input Voltage	-	10	V
Input to Output Voltage Differential	-	10	V

The product (or products) mentioned in this data sheet are no longer being manufactured and may not be ordered (OBS)

Thermal Specifications

Table 2: Thermal Performance

Symbol	Parameter	Package	Max	Units
Ψ_{JB}	Junction to Tab	TO-220	3.0	ºC/W
θ_{JA}	Junction to Ambient	TO-220	60	ºC/W
Ψ_{JB}	Junction to Tab	DD Package	3.0	ºC/W
θ_{JA}	Junction to Ambient	DD Package	60	ºC/W

Electrical Characteristics[1]

Electrical characteristics at V_{OUT} = 10mA, T_A = 25°C, unless otherwise specified. The • denotes the specifications that apply over the full temperature range of –45°C to 125°C, unless otherwise specified.

Table 3: Electrical Characteristics

Parameter	Conditions		Typ	SPX1585A		SPX1585		Units
				Min	Max	Min	Max	
1.5V Version								
Output Voltage (2)	SPX1585 – 1.5V, 0 < I_{OUT} < 5A, 3.3V < V_{IN} < 10V		1.5	1.485	1.515	1.47	1.53	V
		•	1.5	1.47	1.53	1.455	1.545	
2.5V Version								
Output Voltage (2)	SPX1585 – 2.5V, 0 < I_{OUT} < 5A, 4.0V < V_{IN} < 10V		2.5	2.475	2.525	2.45	2.55	V
		•	2.5	2.45	2.55	2.425	2.575	
3.3V Version								
Output Voltage (2)	SPX1585 – 3.3V, 0 < I_{OUT} < 5A, 4.8V < V_{IN} < 10V		3.3	3.267	3.333	3.234	3.366	V
		•	3.3	3.234	3.366	3.069	3.399	
All Voltage Options								
Reference Voltage	V_{IN} ≤ 7V, P ≤ P_{MAX} 1.5V ≤ (V_{IN} – V_{OUT}) ≤ 5.75V, 10mA ≤ I_{OUT} ≤ 5A	•	1.250	1.225	1.270	1.225	1.270	V
Min. Load Current (3)	1.5V ≤ (V_{IN} – V_{OUT}) ≤ 5.75V	•	5	-	10	-	10	mA
Line Regulation	2.75V≤ V_{IN} ≤ 7V, I_{OUT} =10mA, T_J = 25ºC (3)		0.005	-	0.2	-	0.2	%
	V_{IN} ≤ 7V, I_{OUT} = 0mA, T_J = 25ºC (2)		0.005	-	0.2	-	0.2	%
Load Regulation	10mA ≤ I_{OUT} ≤ 5A, (V_{IN} – V_{OUT}) = 3V, T_J = 25ºC (3)		0.05	-	0.3	-	0.3	%
	0 ≤ I_{OUT} ≤ 5A, V_{IN} = 7V, T_J = 25ºC (2)		0.05	-	0.3	-	0.3	%
Dropout Voltage	ΔV_{REF} = 1%	I_{OUT} = 5A (3) I_{OUT} < 5A (2)	1.1	-	1.2	-	1.2	V
Current Limit	V_{IN} = 7V 1.4V ≤ (V_{IN} – V_{OUT}) (3)		6	5.2	-	5.2	-	A
Long Term Stability	T_A = 125ºC, 1000 Hrs.		0.3 (2)	-	1	-	1	%
Thermal Regulation	T_A = 25ºC, 20ms pulse		0.01	-	0.020	-	0.020	%/W
Temperature Stability	-		0.25	-	-	-	-	%
Output Noise, RMS	10Hz to 10kHz		0.003	-	-	-	-	% Vo

1. Changes in output voltage due to heating effects are covered by the thermal regulation specification.
2. Fixed version only.
3. Adjustable version only.

The product (or products) mentioned in this data sheet are no longer being manufactured and may not be ordered (OBS)

Pin Information

Pin Configuration

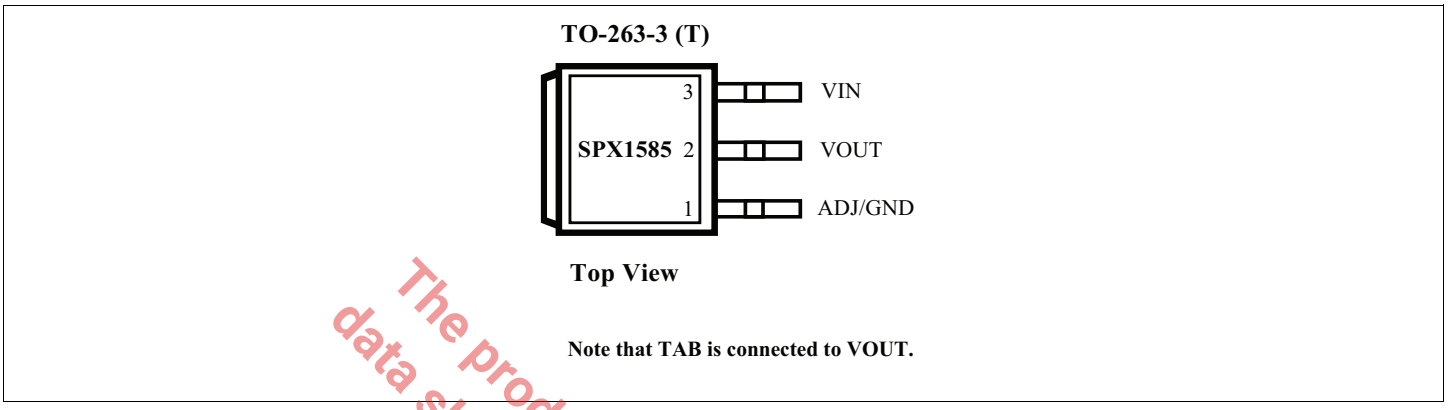

Figure 2: SPX1585 Pinout (Top View)

The product (or products) mentioned in this data sheet are no longer being manufactured and may not be ordered (OBS)

Pin Description

Table 4: Pin Description

Pin Number	Pin Name	Description
1	ADJ/GND	Output voltage adjust pin. For more information on setting the output voltage, see Figure 3 on page 5.
2	VOUT	Output voltage pin. Bypass to GND with a 10µF capacitor. For more information, see "Stability" on page 4.
3	VIN	Input voltage pin. Bypass to GND with a 10µF capacitor.

Application Hints

The SPX1585 incorporates protection against overcurrent faults, reversed load insertion, overtemperature operation, and positive and negative transient voltages. However, the use of an output capacitor is required to ensure the stability and performance of the device.

Stability

The output capacitor is part of the regulator's frequency compensation system. Either a 22µF aluminum electrolytic capacitor or a 10µF solid tantalum capacitor between the output terminal and ground guarantees stable operation for all operating conditions. The recommended value for the equivalent series resistance (ESR) is 0.5Ω or less.

However, in order to minimize overshoot and undershoot, and therefore optimize the design, see "Ripple Rejection".

Ripple Rejection

Ripple rejection can be improved by adding a capacitor between the ADJ pin and ground. When the ADJ pin bypassing is used, the value of the output capacitor required increases to its maximum (220µF for an aluminum electrolytic capacitor, or 47µF for a solid tantalum capacitor). If the ADJ pin is not bypassed, the value of the output capacitor can be lowered to 10µF for an electrolytic aluminum capacitor or 4.7µF for a solid tantalum capacitor.

However, the value of the ADJ bypass capacitor should be chosen based on the following equation:

$C = 1 / (6.28 * F_R * R_1)$

Where C = Value of the capacitor in Farads (select an equal or larger standard value),

F_R = Ripple frequency in Hz,

R_1 = Value of the resistor R_1 in Ω.

If an ADJ bypass capacitor is used, the amplitude of the output ripple is independent of the output voltage. If an ADJ bypass capacitor is not used, the output ripple is proportional to the ratio of the output voltage to the reference voltage:

$M = V_{OUT}/V_{REF}$

Where M = Multiplier for the ripple seen when the ADJ pin is optimally bypassed,

V_{REF} = Reference voltage.

Reducing Parasitic Resistance and Inductance

One solution to minimize parasitic resistance and inductance is to connect capacitors in parallel. This arrangement improves the transient response of the power supply if your system requires rapidly changing current load condition.

Thermal Consideration

Although the SPX1585 offers limiting circuitry for overload conditions, it is necessary not to exceed the maximum junction temperature, and therefore to be careful about thermal resistance. The heat flow follows the lowest resistance path, which is the junction-to-case thermal resistance. To ensure the best thermal flow of the component, a proper mounting is required. Note that the case of the device is electrically connected to the output. If the case must be electrically isolated, a thermally conductive spacer can be used. However, do not forget to consider its contribution to thermal resistance.

Assuming:

V_{IN} = 10V, V_{OUT} = 5V, I_{OUT} = 1.5A, T_A = 50°C/W, $\theta_{Heatsink\ Case}$ = 6°C/W, $\theta_{Heatsink\ Case}$ = 0.5°C/W, θ_{JC} = 3°C/W

Power dissipation under this condition
$P_D = (V_{IN} - V_{OUT}) * I_{OUT}$ = 7.5W

Junction temperature
$T_J = T_A + P_D * (\theta_{Case-HS} + \theta_{HS}\ \theta_{JC})$

For the control section
T_J = 50 + 7.5 * (0.5 + 6 = 3) = 121.25°C
121.25°C < $T_{J\ (max)}$ for the control and power sections.

In both conditions, reliable operation is ensured by an adequate junction temperature.

The product (or products) mentioned in this data sheet are no longer being manufactured and may not be ordered (OBS).

Basic Adjustable Regulator

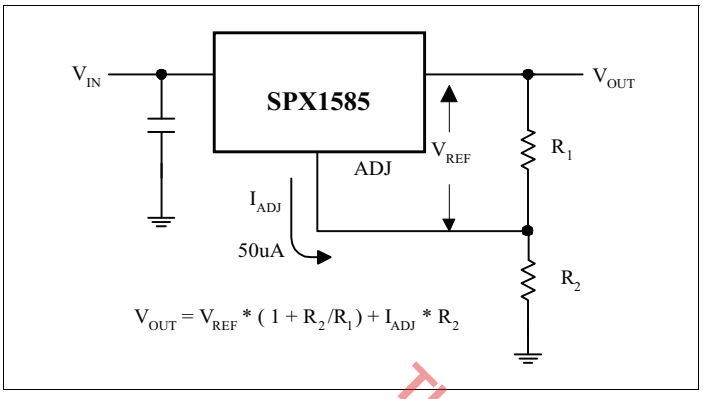

Figure 3: Basic Adjustable Regulator

Output Voltage

In Figure 3, the resistor R_1 generates a constant current flow, normally the specified load current of 10mA. This current goes through the resistor R_2 to set the overall output voltage. The current I_{ADJ} is very small and constant. Therefore, its contribution to the overall output voltage is very small and can generally be ignored.

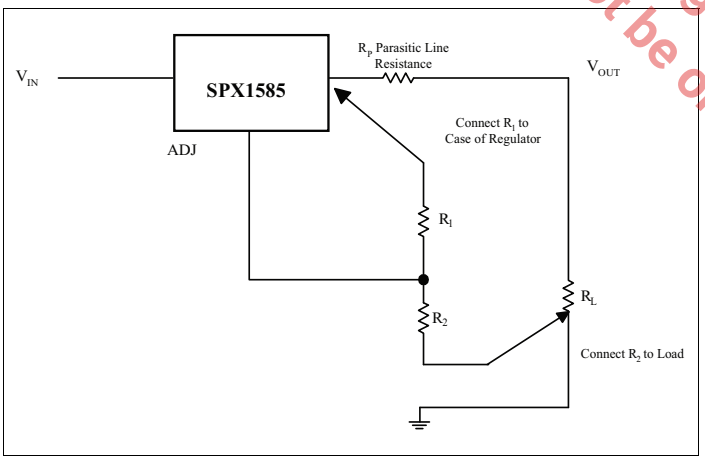

Figure 4: Adjustable Regulator Best Practices

Load Regulation

Parasitic line resistance can degrade load regulation. In order not to affect the behavior of the regulator, it is better to connect the resistor R_1 from the resistor divider directly to the case, and not to the load, as shown in Figure 4. For the same reason, it is better to connect the resistor R_2 to the negative side of the load.

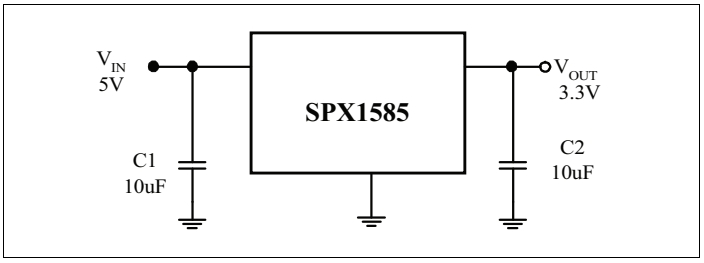

Figure 5: Basic Fixed Regulator

Output Voltage

The fixed-voltage LDO voltage regulators are easy-to-use regulators since the V_{OUT} is preset to the specifications. It is important, however, to provide the appropriate output capacitance for stability and improvement. For most operating conditions, a capacitance of 22µF tantalum or 100µF electrolytic ensures stability and prevents oscillation.

The product(or products) mentioned in this data sheet are no longer being manufactured and may not be ordered (OBS)

Typical Applications Circuits

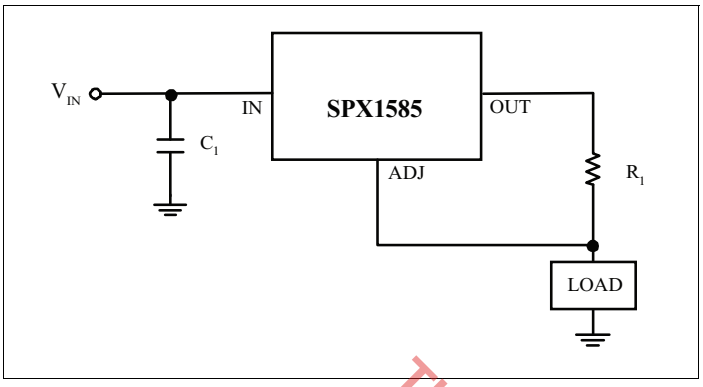

Figure 6: Current Output Regulator

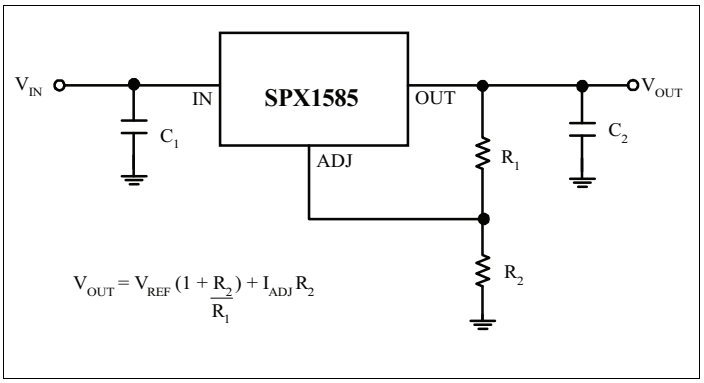

Figure 7: Typical Adjustable Regulator

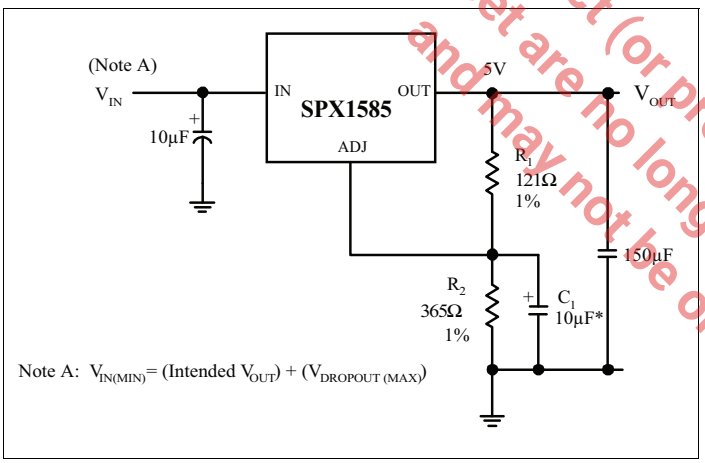

Figure 8: Improving Ripple Rejection

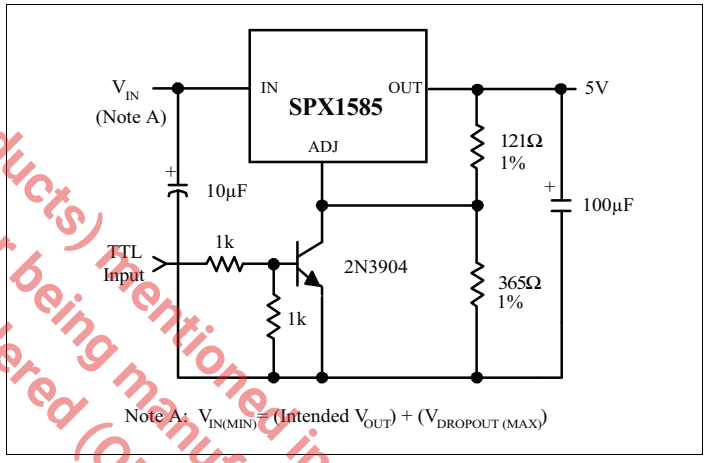

Figure 9: 5V Regulator with Shutdown

Note: For more information on how to calculate C_1, see "Ripple Rejection" on page 4.

The product (or products) mentioned in this data sheet are no longer being manufactured and may not be ordered (OPS)

Typical Performance Characteristics

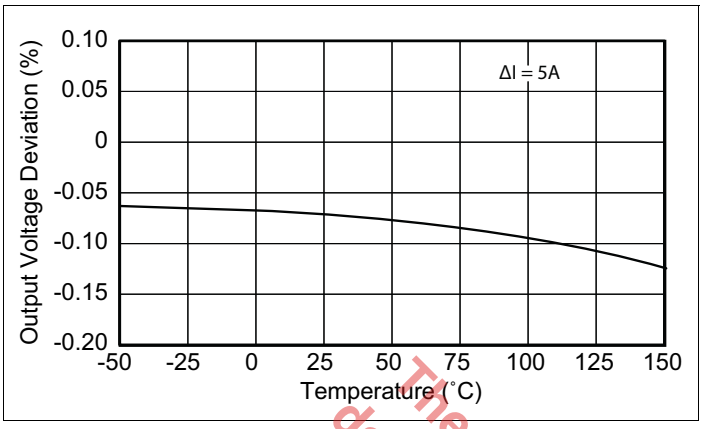

Figure 10: Load Regulation

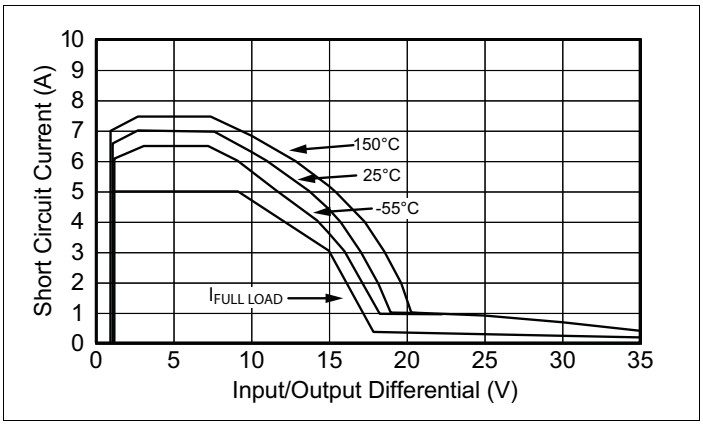

Figure 11: Short Circuit Current

The product (or products) mentioned in this data sheet are no longer being manufactured and may not be ordered (OBS)

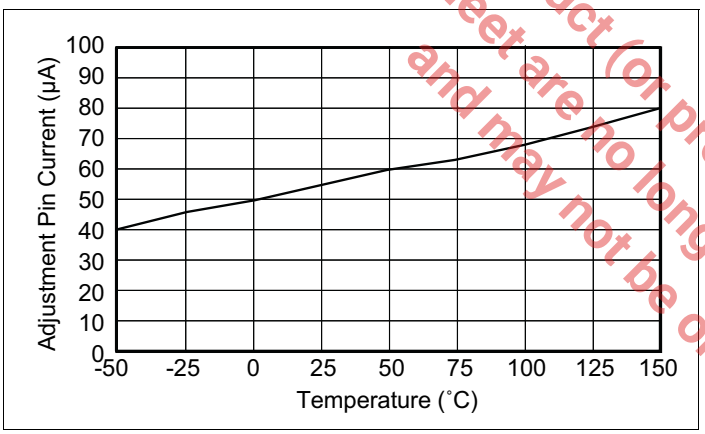

Figure 12: Adjustment Pin Current

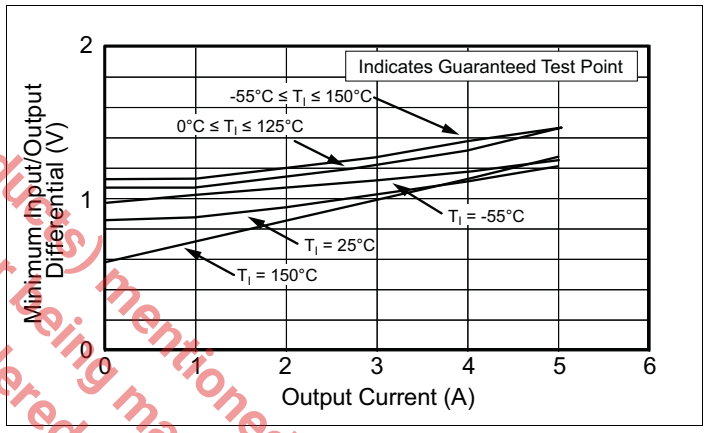

Figure 13: Dropout Voltage

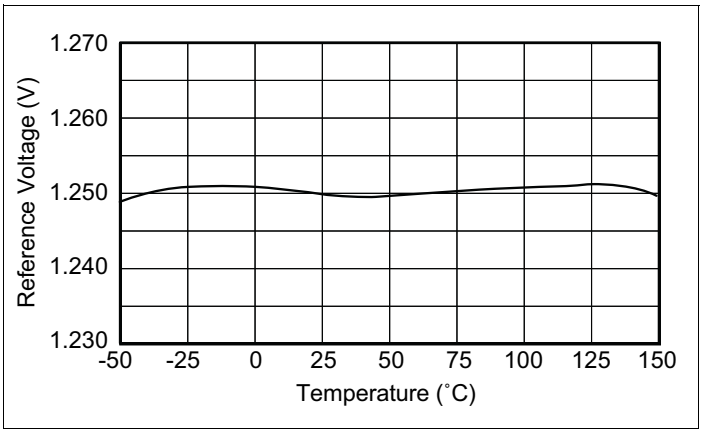

Figure 14: Temperature Stability

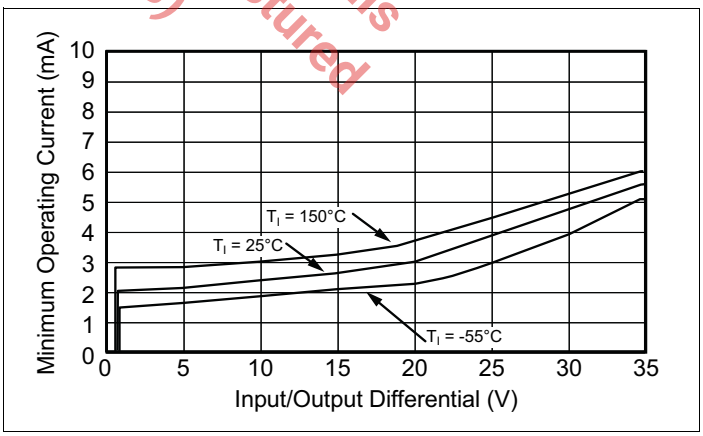

Figure 15: Minimum Operating Current

Ordering Information

Table 5: Ordering Information

Ordering Part Number	Operating Temperature Range	Accuracy	Output Voltage	Package	Packaging
SPX1585AT-L/TR	$-45°C \le T_J \le 125°C$	1%	ADJ	3 Lead TO-263	Tape and Reel

Note: For more information about part numbers, as well as the most up-to-date information and additional information on environmental rating, go to www.maxlinear.com/SPX1585.

The product (or products) mentioned in this data sheet are no longer being manufactured and may not be ordered (OBS).

MaxLinear, Inc.
5966 La Place Court, Suite 100
Carlsbad, CA 92008
Tel.: +1 (760) 692-0711
Fax: +1 (760) 444-8598
www.maxlinear.com

The content of this document is furnished for informational use only, is subject to change without notice, and should not be construed as a commitment by MaxLinear, Inc. MaxLinear, Inc. assumes no responsibility or liability for any errors or inaccuracies that may appear in the informational content contained in this document. Complying with all applicable copyright laws is the responsibility of the user. Without limiting the rights under copyright, no part of this document may be reproduced into, stored in, or introduced into a retrieval system, or transmitted in any form or by any means (electronic, mechanical, photocopying, recording, or otherwise), or for any purpose, without the express written permission of MaxLinear, Inc.

EXCEPT AS OTHERWISE PROVIDED EXPRESSLY IN WRITING BY MAXLINEAR, AND TO THE MAXIMUM EXTENT PERMITTED BY LAW: (A) THE MAXLINEAR PRODUCTS ARE PROVIDED ON AN “AS IS” BASIS WITHOUT REPRESENTATIONS OR WARRANTIES OF ANY KIND, INCLUDING WITHOUT LIMITATION ANY IMPLIED OR STATUTORY WARRANTIES AND ANY WARRANTIES OF MERCHANTABILITY, FITNESS FOR A PARTICULAR PURPOSE, NON-INFRINGEMENT, OR TITLE; AND (B) MAXLINEAR DOES NOT GUARANTEE THAT THE PRODUCTS WILL BE FREE OF ERRORS OR DEFECTS. MAXLINEAR PRODUCTS SHOULD NOT BE USED IN ANY EMERGENCY, SECURITY, MILITARY, LIFE-SAVING, OR OTHER CRITICAL USE CASE WHERE A FAILURE OR MALFUNCTION COULD CAUSE PERSONAL INJURY OR DEATH, OR DAMAGE TO OR LOSS OF PROPERTY. USERS ASSUME ALL RISK FOR USING THE MAXLINEAR PRODUCTS IN SUCH USE CASE. CUSTOMERS AND USERS ARE SOLELY RESPONSIBLE FOR USING THEIR OWN SKILL AND JUDGMENT TO DETERMINE WHETHER MAXLINEAR PRODUCTS ARE SUITABLE FOR THE INTENDED USE CASE.

MaxLinear, Inc. may have patents, patent applications, trademarks, copyrights, or other intellectual property rights covering subject matter in this document. Except as expressly provided in any written license agreement from MaxLinear, Inc., the furnishing of this document does not give you any license to these patents, trademarks, copyrights, or other intellectual property.

MaxLinear, the MaxLinear logo, any other MaxLinear trademarks (including but not limited to MxL, Full-Spectrum Capture, FSC, AirPHY, Puma, AnyWAN, VectorBoost, MXL WARE, and Panther), and the MaxLinear logo on the products sold are all property of MaxLinear, Inc. or one of MaxLinear's subsidiaries in the U.S.A. and other countries. All rights reserved.

All third-party products, company names and logos are trademarks™ or registered® trademarks and remain the property of their respective holders/owners. Use of such marks does not imply any affiliation with, sponsorship or endorsement by the owners/holders of such trademarks. All references by MaxLinear to third party trademarks are intended to constitute nominative fair use under applicable trademark laws.

The URLs provided are for informational purposes only; they do not constitute an endorsement or an approval by MaxLinear of any of the products or services of the corporation or organization or individual. MaxLinear bears no responsibility for the accuracy, legality or content of the external site or for that of subsequent links. Contact the external site for answers to questions regarding its content.

© 2023 MaxLinear, Inc. All rights reserved.