GENERAL DESCRIPTION

The XR16L570 (L570) is a 1.62 to 5.5 volt Universal Asynchronous Receiver and Transmitter (UART) with 5 volt tolerant inputs and a reduced pin count. It is software compatible to industry standard 16C450, 16C550, ST16C580, ST16C650A, XR16C850 and XR16L580 UARTs. It has 16 bytes of TX and RX FIFOs and is capable of operating with a serial data rate of up to 4 Mbps at 5V, 3 Mbps at 3.3V,1 Mbps at 2.5V and 750 Kbps at 1.8V. The internal registers are compatible to the 16C550 register set plus enhanced registers for additional features to support today's high bandwidth data communication needs. The enhanced features include automatic hardware and software flow control to prevent data loss, selectable RX and TX trigger levels for more efficient interrupt service, wireless infrared (IrDA) encoder/decoder for wireless applications and a unique Power-Save mode to increase battery operating time. The device comes in 32-QFN and 24-QFN packages in industrial temperature range.

APPLICATIONS

- Handheld Terminals and Tablets
- Handheld Computers
- Wireless Portable Point-of-Sale Terminals
- Cellular Phones DataPort
- GPS Devices
- Personal Digital Assistants Modules
- Battery Operated Instruments

FEATURES

- Smallest Full Featured UART
- 1.62V to 5.5V Supply Voltage
- 5V Tolerant Inputs (except XTAL1/CLK)
- '0 ns' Address Hold Time (T_{AH} and T_{ADH})
- Software Compatible to industry standard 16C450, 16C550, ST16C580, ST16C650A, XR16C850 and XR16L580
- 16-byte Transmit FIFO
- 16-byte Receive FIFO with Errors Flags
- Selectable RX and TX FIFO Trigger Levels
- Automatic Hardware (RTS/CTS) Flow Control
- Automatic Software (Xon/Xoff) Flow Control
- Up to 4 Mbps data rate at 5.0V Operation
- Up to 3 Mbps data rate at 3.3V Operation
- Up to 1 Mbps data rate at 2.5V Operation
- Up to 750 Kbps data rate at 1.8V Operation
- Infrared (IrDA) Encoder/Decoder
- Complete Modem Interface
- Power-Save Mode to conserve battery power
- Sleep Mode with Wake-up Interrupt
- Very small packages: 24-QFN (4x4x0.9mm) and 32-QFN (5x5x0.9mm)
- Industrial Temperature Grade(-40 to +85°C)

The product (or products) mentioned in this datasheet are no longer being manufactured and may not be ordered (OBS)

FIGURE 1. BLOCK DIAGRAM

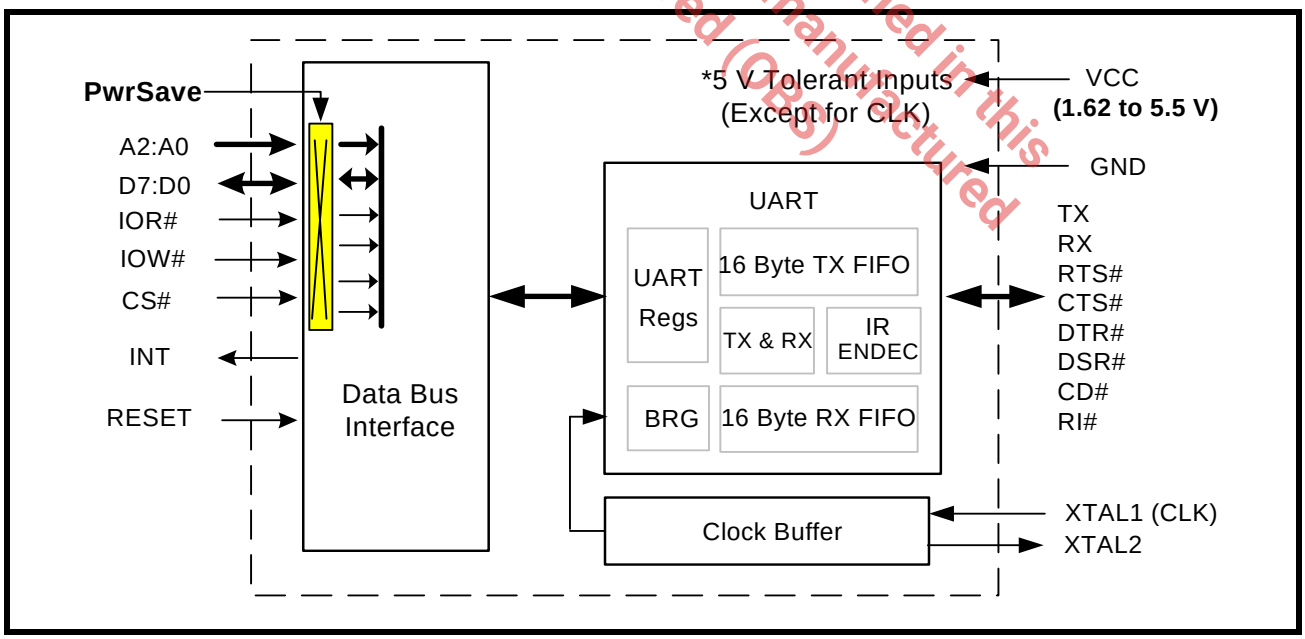

FIGURE 2. PACKAGE AND PIN OUT (24-PIN QFN PACKAGE)

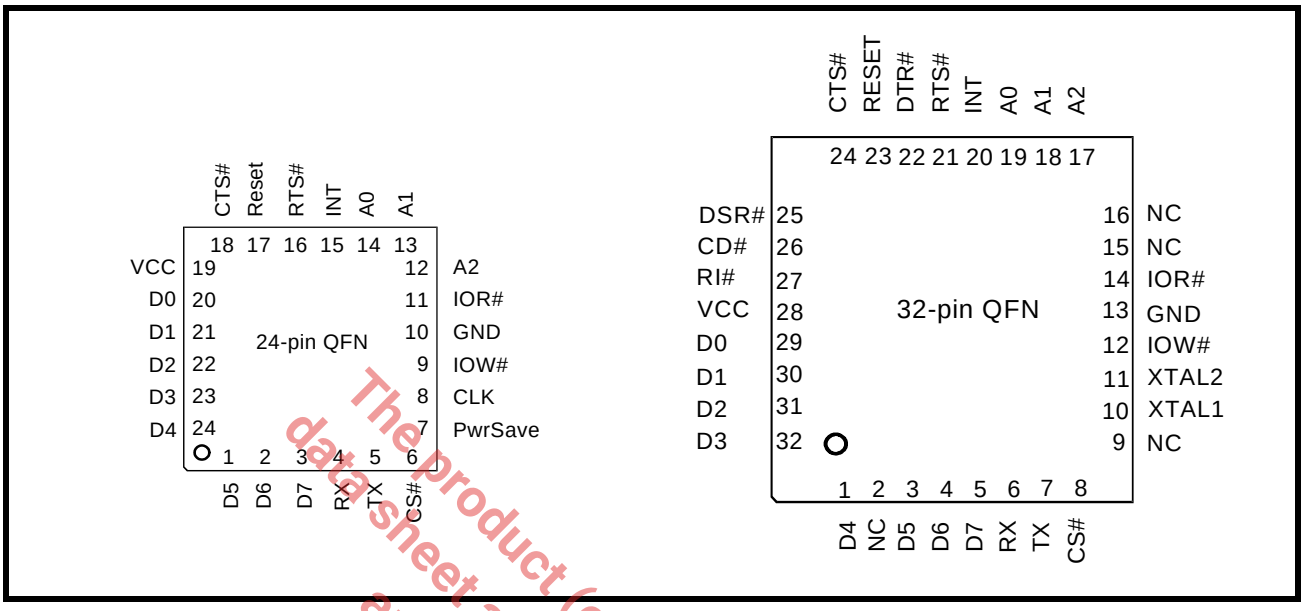

The product (or products) mentioned in this data sheet are no longer being manufactured and may not be ordered (OBS)

ORDERING INFORMATION

PART NUMBER	PACKAGE	OPERATING TEMPERATURE RANGE
XR16L570IL24	24-pin QFN	-40°C to +85°C
XR16L570IL32	32-pin QFN	-40°C to +85°C

PIN DESCRIPTIONS

Pin Descriptions

NAME	24-QFN PIN#	32-QFN PIN#	TYPE	DESCRIPTION
DATA BUS INTERFACE				
A2 A1 A0	12 13 14	17 18 19	I	Address data lines [2:0]. These 3 address lines select one of the internal registers in the UART during a data bus transaction.
D7 D6 D5 D4 D3 D2 D1 D0	3 2 1 24 23 22 21 20	5 4 3 1 32 31 30 29	I/O	Data bus lines [7:0] (bidirectional).
IOR#	11	14	I	This input is the read strobe (active low). The falling edge instigates an internal read cycle and retrieves the data byte from an internal register pointed by the address lines [A2:A0], puts the data byte on the data bus to allow the host processor to read it on the rising edge.
IOW#	9	12	I	This input is the write strobe (active low). The falling edge instigates the internal write cycle and the rising edge transfers the data byte on the data bus to an internal register pointed by the address lines.
CS#	6	8	I	This input is chip select (active low) to enable the device.
INT	15	20	O	This output is the active high device interrupt output. The output state is defined by the user through the software setting of MCR[3]. INT is set to the active mode when MCR[3] is set to a logic 1. INT is set to the three state mode when MCR[3] is set to a logic 0. See MCR[3].
MODEM OR SERIAL I/O INTERFACE				
TX	5	7	O	UART Transmit Data or infrared encoder data. Standard transmit and receive interface is enabled when MCR[6] = 0. In this mode, the TX signal will be a logic 1 during reset or idle (no data). Infrared IrDA transmit and receive interface is enabled when MCR[6] = 1. In the Infrared mode, the inactive state (no data) for the Infrared encoder/decoder interface is a logic 0. If it is not used, leave it unconnected.
RX	4	6	I	UART Receive Data or infrared receive data. Normal receive data input must idle at logic 1 condition. The infrared receiver idles at logic 0.
RTS#	16	21	O	UART Request-to-Send (active low) or general purpose output. This output must be asserted prior to using auto RTS flow control, see EFR[6], MCR[1] and IER[6].
CTS#	18	24	I	UART Clear-to-Send (active low) or general purpose input. It can be used for auto CTS flow control, see EFR[7], MSR[4] and IER[7]. This input should be connected to VCC when not used.
DTR#	-	22	O	UART Data-Terminal-Ready (active low) or general purpose output. ***This pin is not available in the 24-QFN package.***
DSR#	-	25	I	UART Data-Set-Ready (active low) or general purpose input. This input should be connected to VCC when not used. This input has no effect on the UART. ***This pin is not available in the 24-QFN package.***

The product (or products) mentioned in this data sheet are no longer being manufactured and may not be ordered (OPN).

Pin Descriptions

NAME	24-QFN PIN#	32-QFN PIN#	TYPE	DESCRIPTION
CD#	-	26	I	UART Carrier-Detect (active low) or general purpose input. This input should be connected to VCC when not used. This input has no effect on the UART. ***This pin is not available in the 24-QFN package.***
RI#	-	27	I	UART Ring-Indicator (active low) or general purpose input. This input should be connected to VCC when not used. This input has no effect on the UART. ***This pin is not available in the 24-QFN package.***
ANCILLARY SIGNALS				
XTAL1 (CLK)	8	10	I	Crystal or external clock input. This input is not 5V tolerant.
XTAL2	-	11	O	Crystal or buffered clock output. This output may be use to drive a clock buffer which can drive other device(s). ***This pin is not available in the 24-QFN package.***
PwrSave	7	-	I	Power-Save (active high). This feature isolates the L570's data bus interface from the host preventing other bus activities that cause higher power drain during sleep mode. See Sleep Mode with Auto Wake-up and Power-Save Feature section for details. ***This pin is not available in the 28-QFN package.***
RESET	17	23	I	This input is the active high RESET signal. A 40 ns minimum active pulse on this pin will reset the internal registers and all outputs of the UART. The UART transmitter output will be held at logic 1, the receiver input will be ignored and outputs are reset during reset period (see UART Reset Conditions).
VCC	19	28	Pwr	1.62V to 5.5V power supply. All input pins, except CLK, are 5V tolerant.
GND	10	13	Pwr	Power supply common, ground.
GND	Center Pad	Center Pad	Pwr	The center pad on the backside of the QFN packages is metallic and should be connected to GND on the PCB. The thermal pad size on the PCB should be the approximate size of this center pad and should be solder mask defined. The solder mask opening should be at least 0.0025" inwards from the edge of the PCB thermal pad.

NOTE: *Pin type: I=Input, O=Output, I/O= Input/output, OD=Output Open Drain.*

The product (or products) mentioned in this data sheet are no longer being manufactured and may not be ordered. (ORS)

1.0 PRODUCT DESCRIPTION

The XR16L570 (L570) is an enhanced 16C550 Universal Asynchronous Receiver and Transmitter (UART). Its features set is compatible to the ST16C580 device and additionally offers Power-Save to isolate the data bus interface during Sleep mode. The XR16L570 can operate from 1.62V to 5.5V with 5 volt tolerant inputs. The configuration registers set is 16550 UART compatible for control, status and data transfer. Also, the L570 has 16-bytes of transmit and receive FIFOs, automatic RTS/CTS hardware flow control, automatic Xon/Xoff and special character software flow control, transmit and receive FIFO trigger levels, infrared encoder and decoder (IrDA ver 1.0), programmable baud rate generator with a prescaler of divide by 1 or 4. The L570 is fabricated using an advanced CMOS process.

Enhanced Features

The L570 UART provides a solution that supports 16 bytes of transmit and receive FIFO memory. The L570 is designed to work with low supply voltage and high performance data communication systems, that require fast data processing time. Increased performance is realized in the L570 by the transmit and receive FIFOs, FIFO trigger level controls and automatic flow control mechanism. This allows the external processor to handle more networking tasks within a given time. This increases the service interval giving the external CPU additional time for other applications and reducing the overall UART interrupt servicing time. In addition, the L570 provides the Power-Save mode that drastically reduces the power consumption when the device is not used. The combination of the above greatly reduces the CPU's bandwidth requirement, increases performance, and reduces power consumption.

The product (or products) mentioned in this data sheet are no longer being manufactured and may not be ordered (OBS)

Data Bus Interface

The L570 provides a host interface that supports a microprocessor (CPU) data bus interface. The interface allows direct interconnect to Intel compatible type of CPUs using IOR#, IOW# and CS# inputs for data bus operation. See pin description section for details on all the control signals.

Data Rate

The L570 is capable of operation up to 4 Mbps at 5V, 3 Mbps at 3.3V, 1 Mbps at 2.5V and 750 Kbps at 1.8V with 16X internal sampling clock rate by using an external clock source on the XTAL1 (CLK) pin.

Internal Enhanced Register Sets

The L570 UART has a set of enhanced registers providing control and monitoring functions. Interrupt enable/disable and status, FIFO enable/disable, selectable TX and RX FIFO trigger levels, automatic hardware/software flow control enable/disable, programmable baud rates, infrared encoder/decoder enable/disable, modem interface controls and status, sleep mode and Power-Save mode (in the 24-QFN package) are all standard features. Following a power on reset or an external reset, the registers defaults to the reset condition and it is compatible with previous generation of UARTs, 16C450, 16C550, 16C580, 16L580, 16C650A and 16C850.

2.0 FUNCTIONAL DESCRIPTIONS

2.1 CPU Interface

The CPU interface is 8 data bits wide with 3 address lines and control signals to execute data bus read and write transactions. The L570 data interface supports the Intel compatible types of CPUs and it is compatible to the industry standard 16C550 UART. No clock (oscillator nor external clock) is required to operate a data bus transaction. Each bus cycle is asynchronous using CS#, IOR# and IOW# inputs. A typical data bus interconnection is shown in Figure 3.

FIGURE 3. XR16L570 TYPICAL DATA BUS INTERCONNECTIONS

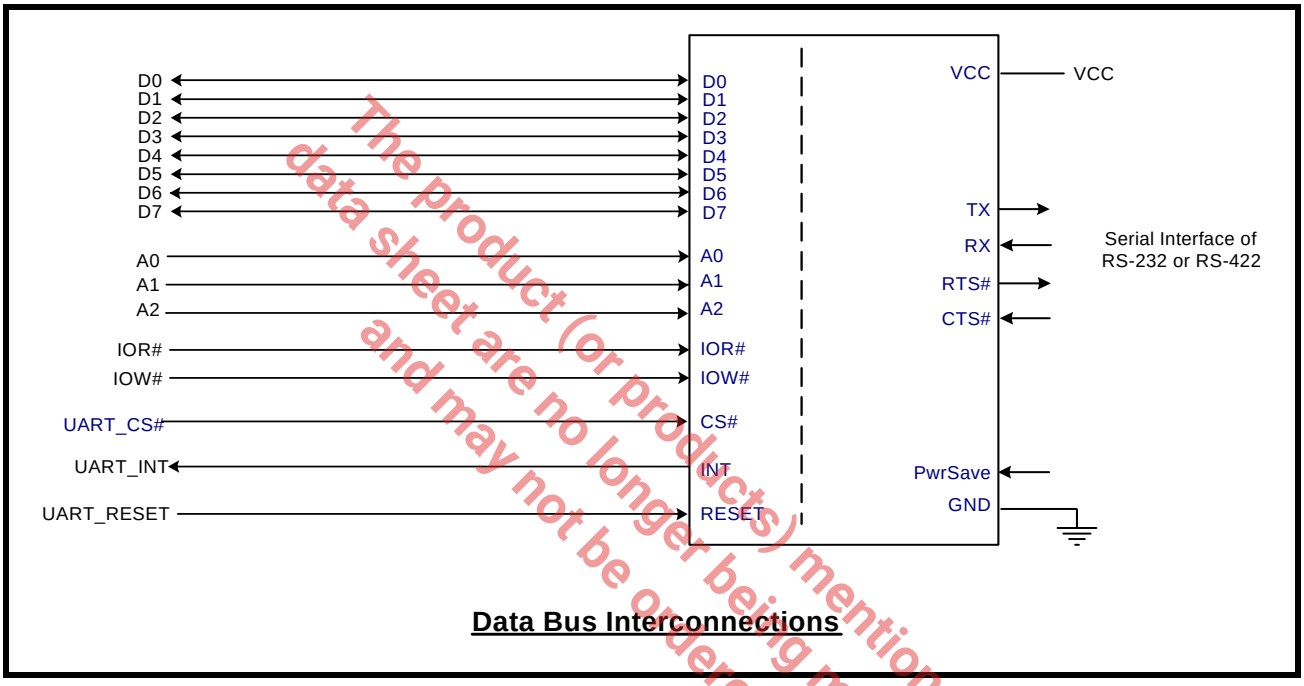

The product (or products) mentioned in this data sheet are no longer being manufactured and may not be ordered (OBS)

2.2 5-Volt Tolerant Inputs

The L570 can accept up to 5V inputs when operating at 3.3V, 2.5V or 1.8V. But note that if the L570 is operating at 2.5V or below, its V_{OH} may not be high enough to meet the requirements of the V_{IH} of a CPU or a serial transceiver that is operating at 5V. Note that the XTAL1 (CLK) pin is not 5V tolerant.

2.3 Device Hardware Reset

The RESET input resets the internal registers and the serial interface outputs in both channels to their default state (see Table 11). An active pulse of longer than 40 ns duration will be required to activate the reset function in the device.

2.4 Device Identification and Revision

The XR16L570 provides a Device Identification code and a Device Revision code. To read the identification code from the part, it is required to set the baud rate generator registers DLL and DLM both to 0x00. Now reading the content of the DLM will provide 0x01 to indicate XR16L570 and reading the content of DLL will provide the revision of the part; for example, a reading of 0x01 means revision A.

2.5 Internal Registers

The L570 has a set of enhanced registers for control, monitoring and data loading and unloading. The configuration register set is compatible to those already available in the standard 16C550. These registers function as data holding registers (THR/RHR), interrupt status and control registers (ISR/IER), a FIFO control register (FCR), receive line status and control registers (LSR/LCR), modem status and control registers (MSR/MCR), programmable data rate (clock) divisor registers (DLL/DLM), and an user accessible Scratchpad register (SPR).

Beyond the general 16C550 features and capabilities, the L570 offers enhanced feature registers (EFR, Xon1, Xoff 1, Xon1 and Xoff2) that provide automatic RTS and CTS hardware flow control and Xon/Xoff software flow control. All the register functions are discussed in full detail later in "Section 3.0, UART INTERNAL REGISTERS" on page 19.

2.6 DMA Mode

The DMA Mode (a legacy term) refers to data block transfer operation. The DMA mode affects the state of the RXRDY# and TXRDY# output pins available in the original 16C550. These pins are not available in the XR16L570. The DMA Enable bit (FCR bit-3) does not have any function in this device and can be a '0' or a '1'.

2.7 INT Output

The interrupt output changes according to the operating mode and enhanced features setup. Table 1 and Table 2 below summarize the operating behavior for the transmitter and receiver. Also see Figures 18 through 21.

The product(s) mentioned in this data sheet are no longer being manufactured and may not be ordered (OBS)

TABLE 1: INT PIN OPERATION FOR TRANSMITTER

	FCR BIT-0 = 0 (FIFO DISABLED)	FCR BIT-0 = 1 (FIFO ENABLED)
INT Pin	0 = one byte in THR 1 = THR empty	0 = FIFO above trigger level 1 = FIFO below trigger level or FIFO empty

TABLE 2: INT PIN OPERATION FOR RECEIVER

	FCR BIT-0 = 0 (FIFO DISABLED)	FCR BIT-0 = 1 (FIFO ENABLED)
INT Pin	0 = no data 1 = 1 byte	0 = FIFO below trigger level 1 = FIFO above trigger level

2.8 Crystal or External Clock Input

The L570 includes an on-chip oscillator in the 32-QFN package (XTAL1 and XTAL2) to generate a clock when a crystal is connected between the XTAL1 and XTAL2 pins of the device. Alternatively, an external clock can be supplied through the XTAL1 or CLK pin. The CPU data bus does not require this clock for bus operation. The crystal oscillator provides a system clock to the Baud Rate Generators (BRG) section. XTAL1 is the input to the oscillator or external clock input and XTAL2 pin is the bufferred output which can be used as a clock signal for other devices in the system. Please note that the XTAL1 input is not 5V tolerant and therefore, the maximum voltage at that pin should be VCC when an external clock is supplied. For programming details, see **"Section 2.9, Programmable Baud Rate Generator" on page 9**.

FIGURE 4. TYPICAL CRYSTAL CONNECTIONS

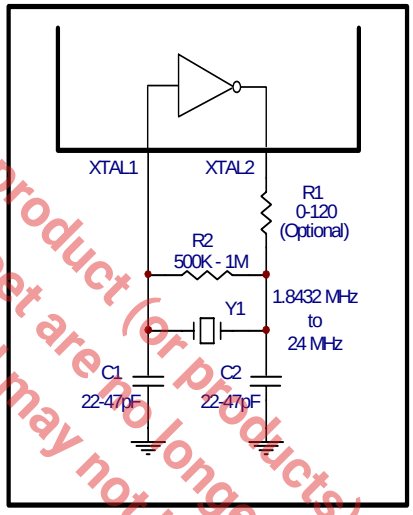

The product (or products) mentioned in this data sheet are no longer bring manufactured and may not be ordered (OBS)

The on-chip oscillator is designed to use an industry standard microprocessor crystal (parallel resonant, fundamental frequency with 10-22 pF capacitance load, ESR of 20-120 ohms and 100ppm frequency tolerance) connected externally between the XTAL1 and XTAL2 pins (see **Figure 4**). When VCC = 5V, the on-chip oscillator can operate with a crystal whose frequency is not greater than 24 MHz. On the other hand, the L570 can accept an external clock of up to 64MHz at XTAL1 pin, with a 2K ohms pull-up resistor on XTAL2 pin (as shown in **Figure 5**). The 2K ohms pull-up resistor may be required for external clock frequencies of greater than 24MHz. This translates to a maximum of 4Mbps serial data rate at 5V.

FIGURE 5. EXTERNAL CLOCK CONNECTION FOR EXTENDED DATA RATE

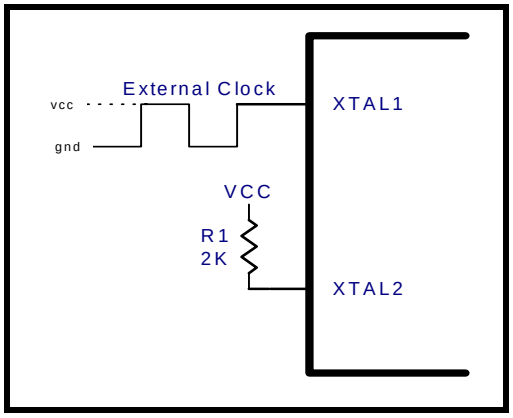

For further reading on the oscillator circuit please see the Application Note DAN108 on the EXAR web site at **http://www.exar.com.**

2.9 Programmable Baud Rate Generator

The L570 UART has its own Baud Rate Generator (BRG) with a prescaler. The prescaler is controlled by a software bit (bit-7) in the MCR register. This bit selects the prescaler to divide the input external clock by a factor of 1 or 4. The clock output of the prescaler goes to the BRG. The BRG further divides this clock by a programmable divisor (via DLL and DLM registers) between 1 and (2^{16} -1) to obtain a 16X sampling rate clock of the serial data rate. The sampling rate clock is used by the transmitter for data bit shifting and receiver for data sampling. The BRG divisor defaults to the maximum baud rate (DLL = 0x01 and DLM = 0x00) upon power up.

FIGURE 6. BAUD RATE GENERATOR AND PRESCALER

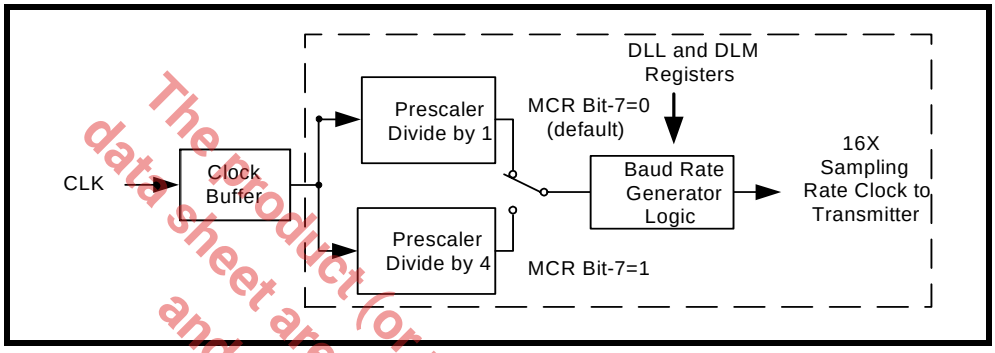

Programming the Baud Rate Generator Registers DLM and DLL provides the capability of selecting the operating data rate. Table 3 shows the standard data rates available with a 14.7456 MHz external clock at 16X sampling rate clock rate. When using a non-standard data rate external clock, the divisor value can be calculated for DLL/DLM with the following equation.

divisor (decimal) = (clock frequency / prescaler) / (serial data rate x 16)

The product (or products) mentioned in this data sheet are no longer being manufactured and may not be ordered (OBS)

TABLE 3: TYPICAL DATA RATES WITH A 14.7456 MHZ EXTERNAL CLOCK

OUTPUT Data Rate MCR Bit-7=1	OUTPUT Data Rate MCR Bit-7=0 (DEFAULT)	DIVISOR FOR 16X Clock (Decimal)	DIVISOR FOR 16X Clock (HEX)	DLM PROGRAM VALUE (HEX)	DLL PROGRAM VALUE (HEX)	DATA RATE ERROR (%)
100	400	2304	900	09	00	0
600	2400	384	180	01	80	0
1200	4800	192	C0	00	C0	0
2400	9600	96	60	00	60	0
4800	19.2k	48	30	00	30	0
9600	38.4k	24	18	00	18	0
19.2k	76.8k	12	0C	00	0C	0
38.4k	153.6k	6	06	00	06	0
57.6k	230.4k	4	04	00	04	0
115.2k	460.8k	2	02	00	02	0
230.4k	921.6k	1	01	00	01	0

The product (or product(s) mentioned in this data sheet are no longer being manufactured and may not be ordered (OBS)

2.10 Transmitter

The transmitter section comprises of an 8-bit Transmit Shift Register (TSR) and 16 bytes of FIFO which includes a byte-wide Transmit Holding Register (THR). TSR shifts out every data bit with the 16X internal clock. A bit time is 16 clock periods. The transmitter sends the start-bit followed by the number of data bits, inserts the proper parity-bit if enabled, and adds the stop-bit(s). The status of the FIFO and TSR are reported in the Line Status Register (LSR bit-5 and bit-6).

2.10.1 Transmit Holding Register (THR) - Write Only

The transmit holding register is an 8-bit register providing a data interface to the host processor. The host writes transmit data byte to the THR to be converted into a serial data stream including start-bit, data bits, parity-bit and stop-bit(s). The least-significant-bit (Bit-0) becomes first data bit to go out. The THR is the input register to the transmit FIFO of 16 bytes when FIFO operation is enabled by FCR bit-0. Every time a write operation is made to the THR, the FIFO data pointer is automatically bumped to the next sequential data location.

2.10.2 Transmitter Operation in non-FIFO Mode

The host loads transmit data to THR one character at a time. The THR empty flag (LSR bit-5) is set when the data byte is transferred to TSR. THR flag can generate a transmit empty interrupt (ISR bit-1) when it is enabled by IER bit-1. The TSR flag (LSR bit-6) is set when TSR becomes completely empty.

FIGURE 7. TRANSMITTER OPERATION IN NON-FIFO MODE

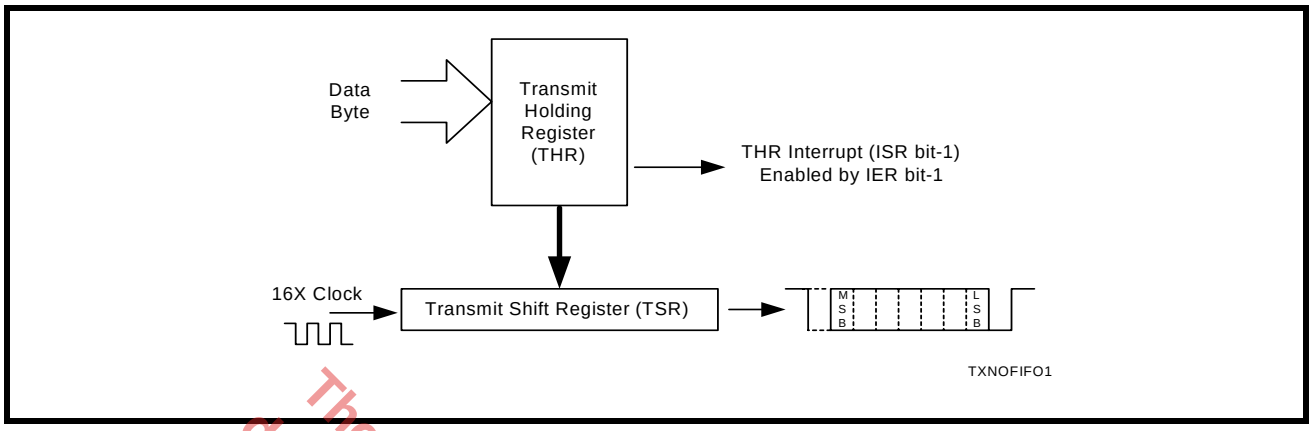

The product (or Products) mentioned in this data sheet are no longer being manufactured and may not be ordered (OBS)

2.10.3 Transmitter Operation in FIFO Mode

The host may fill the transmit FIFO with up to 16 bytes of transmit data. The THR empty flag (LSR bit-5) is set whenever the FIFO is empty. The THR empty flag can generate a transmit empty interrupt (ISR bit-1) when the amount of data in the FIFO falls below its programmed trigger level. The transmit empty interrupt is enabled by IER bit-1. The Transmitter Empty Flag (LSR bit-6) is set when both the TSR and the FIFO become empty.

FIGURE 8. TRANSMITTER OPERATION IN FIFO AND FLOW CONTROL MODE

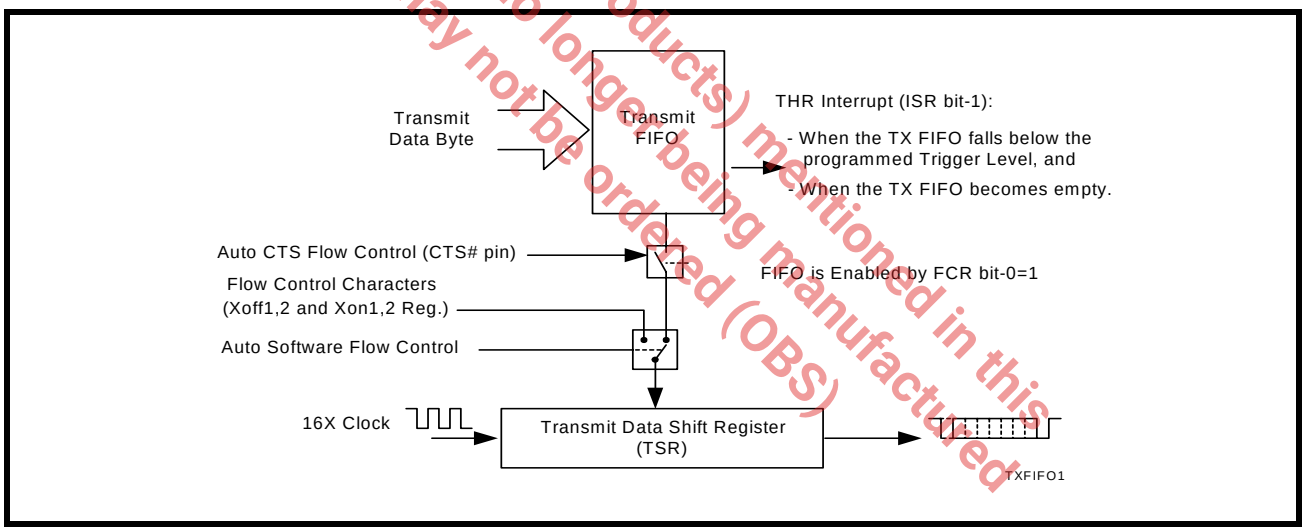

2.11 RECEIVER

The receiver section contains an 8-bit Receive Shift Register (RSR) and 16 bytes of FIFO which includes a byte-wide Receive Holding Register (RHR). The RSR uses the 16X clock for timing. On the falling edge of a start or a false start bit, an internal receiver counter starts counting at the 16X clock rate. After 8 clocks the start bit period should be at the center of the start bit. At this time the start bit is sampled and if it is still a logic 0 it is validated as a start bit. Evaluating the start bit in this manner prevents the receiver from assembling a false character. Each of the data, parity and stop bits is sampled at the middle of the bit to prevent false framing. If there were any error(s), they are reported in the LSR register bits 2-4. Upon unloading the receive data byte from RHR, the receive FIFO pointer is bumped and the error tags are immediately updated to reflect the status of the data byte in RHR register. RHR can generate a receive data ready interrupt upon receiving a character or delay until it reaches the FIFO trigger level. Furthermore, data delivery to the host is guaranteed by a receive data ready time-out interrupt when data is not received for 4 word lengths as defined by LCR[1:0] plus 12 bits time. This is equivalent to 3.7-4.6 character times. The RHR interrupt is enabled by IER bit-0.

2.11.1 Receive Holding Register (RHR) - Read-Only

The Receive Holding Register is an 8-bit register that holds a receive data byte from the Receive Shift Register. It provides the receive data interface to the host processor. The RHR register is part of the receive FIFO of 16 bytes by 11-bits wide, the 3 extra bits are for the 3 error tags to be reported in LSR register. When the FIFO is enabled by FCR bit-0, the RHR contains the first data character received by the FIFO. After the RHR is read, the next character byte is loaded into the RHR and the errors associated with the current data byte are immediately updated in the LSR bits 2-4.

FIGURE 9. RECEIVER OPERATION IN NON-FIFO MODE

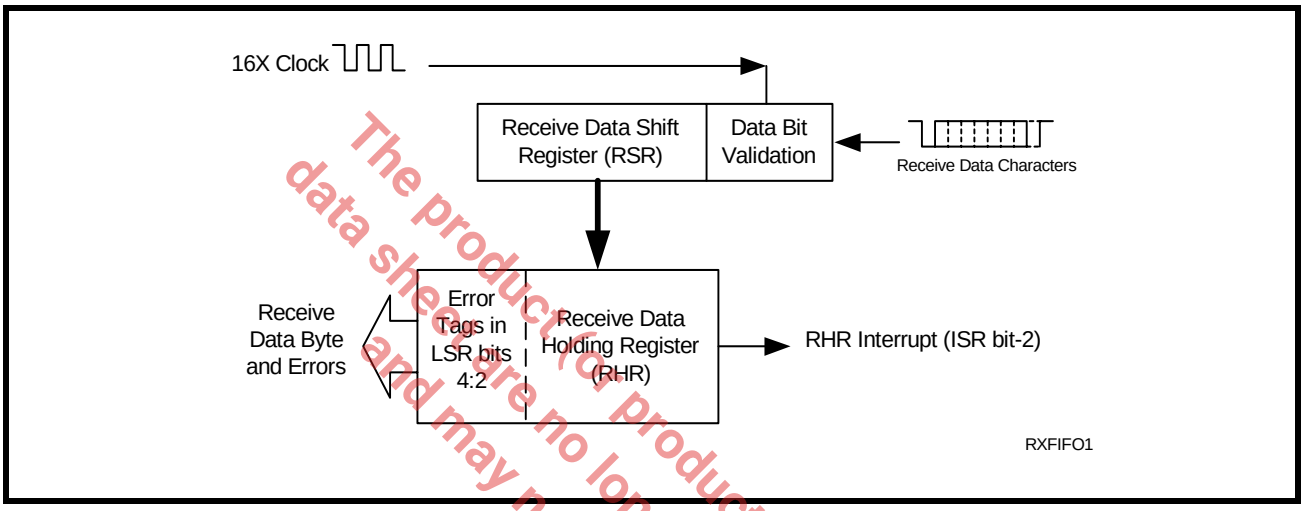

FIGURE 10. RECEIVER OPERATION IN FIFO AND AUTO RTS FLOW CONTROL MODE

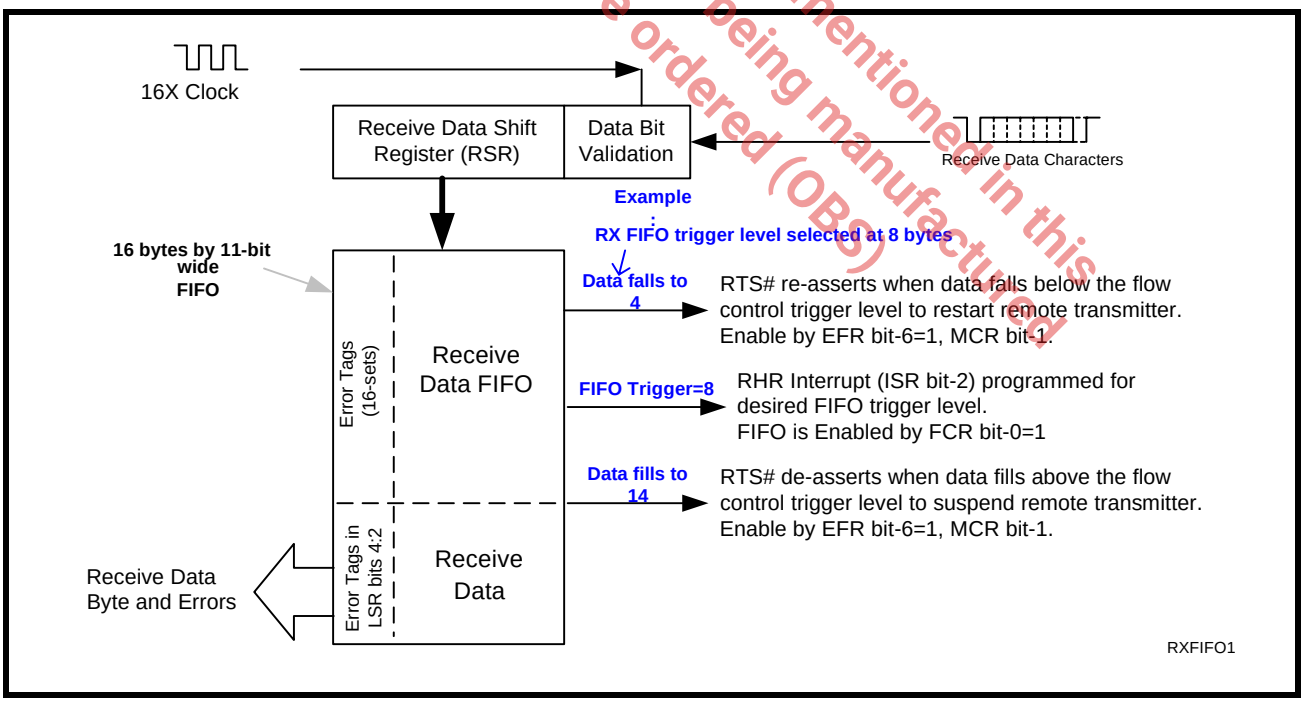

The product(s) mentioned in this data sheet are no longer being manufactured and may not be ordered (OBS)

2.12 Auto RTS (Hardware) Flow Control

Automatic RTS hardware flow control is used to prevent data overrun to the local receiver FIFO. The RTS# output is used to request remote unit to suspend/resume data transmission. The auto RTS flow control features is enabled to fit specific application requirement (see Figure 11):

- Enable auto RTS flow control using EFR bit-6.
- The auto RTS function must be started by asserting RTS# output pin (MCR bit-1 to logic 1 after it is enabled).

If using the Auto RTS interrupt:

- Enable RTS interrupt through IER bit-6 (after setting EFR bit-4). The UART issues an interrupt when the RTS# pin makes a transition from low to high: ISR bit-5 will be set to logic 1.

2.13 Auto RTS Hysteresis

The L570 has a new feature that provides flow control trigger hysteresis while maintaining compatibility with the ST16C550 UART. With the Auto RTS function enabled, an interrupt is generated when the receive FIFO reaches the programmed RX trigger level. The RTS# pin will not be forced to a logic 1 (RTS off), until the receive FIFO reaches one trigger level above the programmed trigger level in the trigger table (Table 8). The RTS# pin will return to a logic 0 after the RX FIFO is unloaded to one trigger level lower than the programmed trigger level. This is described in Figure 11. Under the above described conditions, the L570 will continue to accept data until the receive FIFO gets full. The Auto RTS function is initiated when the RTS# output pin is asserted to a logic 0 (RTS On).

2.14 Auto CTS Flow Control

Automatic CTS flow control is used to prevent data overrun to the remote receiver FIFO. The CTS# input is monitored to suspend/restart the local transmitter. The auto CTS flow control feature is selected to fit specific application requirement (see Figure 11):

- Enable auto CTS flow control using EFR bit-7.

If using the Auto CTS interrupt:

- Enable CTS interrupt through IER bit-7 (after setting EFR bit-4). The UART issues an interrupt when the CTS# pin is de-asserted (HIGH): ISR bit-5 will be set to 1, and UART will suspend transmission as soon as the stop bit of the character in process is shifted out. Transmission is resumed after the CTS# input is re-asserted (LOW), indicating more data may be sent.

The product (or products) mentioned in this data sheet are no longer being manufactured and may not be ordered (OBS)

FIGURE 11. AUTO RTS AND CTS FLOW CONTROL OPERATION

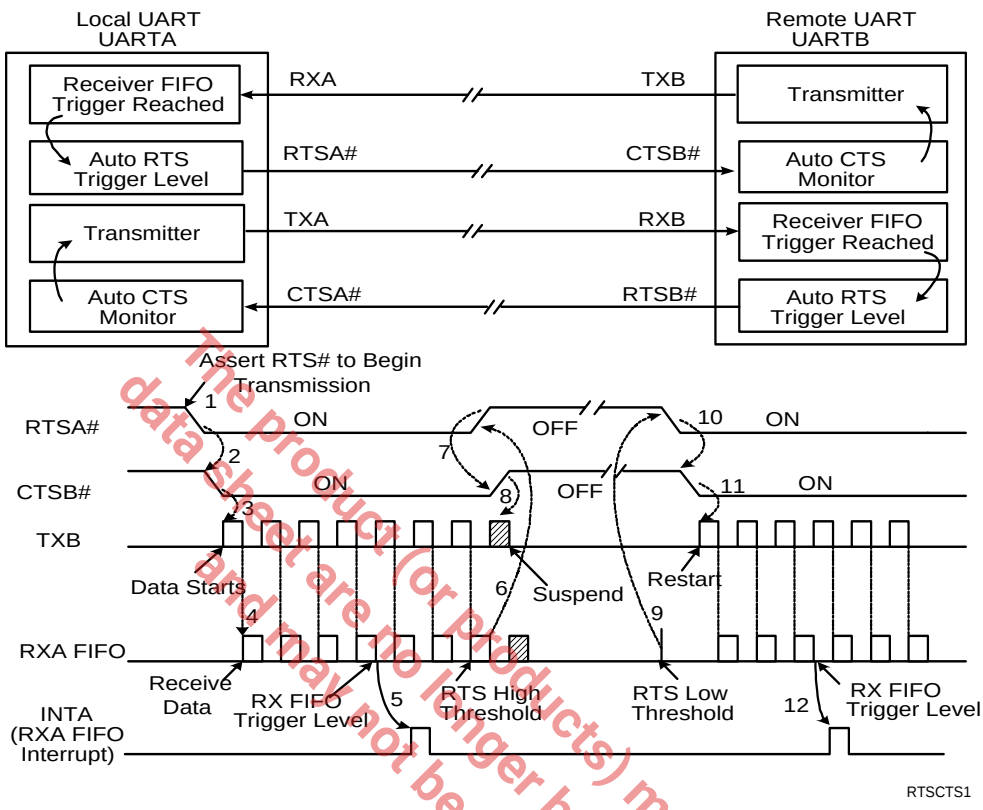

The local UART (UARTA) starts data transfer by asserting RTSA# (1). RTSA# is normally connected to CTSB# (2) of remote UART (UARTB). CTSB# allows its transmitter to send data (3). TXB data arrives and fills UARTA receive FIFO (4). When RXA data fills up to its receive FIFO trigger level, UARTA activates its RXA data ready interrupt (5) and continues to receive and put data into its FIFO. If interrupt service latency is long and data is not being unloaded, UARTA monitors its receive data fill level to match the upper threshold of RTS delay and de-assert RTSA# (6). CTSB# follows (7) and request UARTB transmitter to suspend data transfer. UARTB stops or finishes sending the data bits in its transmit shift register (8). When receive FIFO data in UARTA is unloaded to match the lower threshold of RTS delay (9), UARTA re-asserts RTSA# (10), CTSB# recognizes the change (11) and restarts its transmitter and data flow again until next receive FIFO trigger (12). This same event applies to the reverse direction when UARTA sends data to UARTB with RTSB# and CTSA# controlling the data flow.

The product (or products) mentioned in this data sheet are no longer being manufactured and may not be ordered (obsolete)

2.15 Auto Xon/Xoff (Software) Flow Control

When software flow control is enabled (See Table 10), the L570 compares one or two sequential receive data characters with the programmed Xon or Xoff-1,2 character value(s). If receive character(s) (RX) match the programmed values, the L570 will halt transmission (TX) as soon as the current character has completed transmission. When a match occurs, the Xoff (if enabled via IER bit-5) flag will be set and the interrupt output pin will be activated. Following a suspension due to a match of the Xoff character, the L570 will monitor the receive data stream for a match to the Xon-1,2 character. If a match is found, the L570 will resume operation and clear the flags (ISR bit-4).

Reset initially sets the contents of the Xon/Xoff 8-bit flow control registers to a logic 0. Following reset the user can write any Xon/Xoff value desired for software flow control. Different conditions can be set to detect Xon/Xoff characters (See Table 10) and suspend/resume transmissions. When double 8-bit Xon/Xoff characters are selected, the L570 compares two consecutive receive characters with two software flow control 8-bit values (Xon1, Xon2, Xoff1, Xoff2) and controls TX transmissions accordingly. Under the above described flow control mechanisms, flow control characters are not placed (stacked) in the user accessible RX data buffer or FIFO.

In the event that the receive buffer is overfilling and flow control needs to be executed, the L570 automatically sends an Xoff message (when enabled) via the serial TX output to the remote modem. The L570 sends the Xoff character(s) two-character-times (= time taken to send two characters at the programmed baud rate) after the receive FIFO crosses the programmed trigger level. To clear this condition, the L570 will transmit the programmed Xon character(s) as soon as receive FIFO is less than one trigger level below the programmed trigger level (see Table 8). **The table below describes this**.

The product(s) mentioned in this data sheet are no longer being manufactured and may not be ordered (OBS)

TABLE 4: AUTO XON/XOFF (SOFTWARE) FLOW CONTROL

RX TRIGGER LEVEL	INT PIN ACTIVATION	XOFF CHARACTER(S) SENT (CHARACTERS IN RX FIFO)	XON CHARACTER(S) SENT (CHARACTERS IN RX FIFO)
1	1	1*	0
4	4	4*	1
8	8	8*	4
14	14	14*	8

** After the trigger level is reached, an xoff character is sent after a short span of time (= time required to send 2* characters); for example, after 2.083ms has elapsed for 9600 baud and 8-bit word length, no parity and 1 stop bit setting.

2.16 Special Character Detect

A special character detect feature is provided to detect an 8-bit character when bit-5 is set in the Enhanced Feature Register (EFR). When this character (Xoff2) is detected, it will be placed in the FIFO along with normal incoming RX data.

The L570 compares each incoming receive character with the programmed Xoff-2 data. If a match exists, the received data will be transferred to the RX FIFO and ISR bit-4 will be set to indicate detection of special character. Although the Internal Register Table shows Xon, Xoff Registers with eight bits of character information, the actual number of bits is dependent on the programmed word length. Line Control Register (LCR) bits 0-1 defines the number of character bits, i.e., either 5 bits, 6 bits, 7 bits, or 8 bits. The word length selected by LCR bits 0-1 also determines the number of bits that will be used for the special character comparison. Bit-0 in the Xon, Xoff Registers corresponds with the LSB bit for the receive character.

2.17 Infrared Mode

The L570 UART includes the infrared encoder and decoder compatible to the IrDA (Infrared Data Association) version 1.0. The IrDA 1.0 standard that stipulates the infrared encoder sends out a 3/16 of a bit wide HIGH-pulse for each “0” bit in the transmit data stream. This signal encoding reduces the on-time of the infrared LED, hence reduces the power consumption. See **Figure 12** below.

The infrared encoder and decoder are enabled by setting MCR register bit-6 to a ‘1’. When the infrared feature is enabled, the transmit data output, TX, idles at logic zero level. Likewise, the RX input assumes an idle level of logic zero from a reset and power up, see **Figure 12**.

Typically, the wireless infrared decoder receives the input pulse from the infrared sensing diode on the RX pin. Each time it senses a light pulse, it returns a logic 1 to the data bit stream. However, this is not true with some infrared modules on the market which indicate a logic 0 by a light pulse. So the L570 has a provision to invert the input polarity to accommodate this. In this case, the user can enable MCR bit-2 to invert the IR signal at the RX pin.

The product (or products) mentioned in this data sheet are no longer being manufactured and may not be ordered (OBS)

FIGURE 12. INFRARED TRANSMIT DATA ENCODING AND RECEIVE DATA DECODING

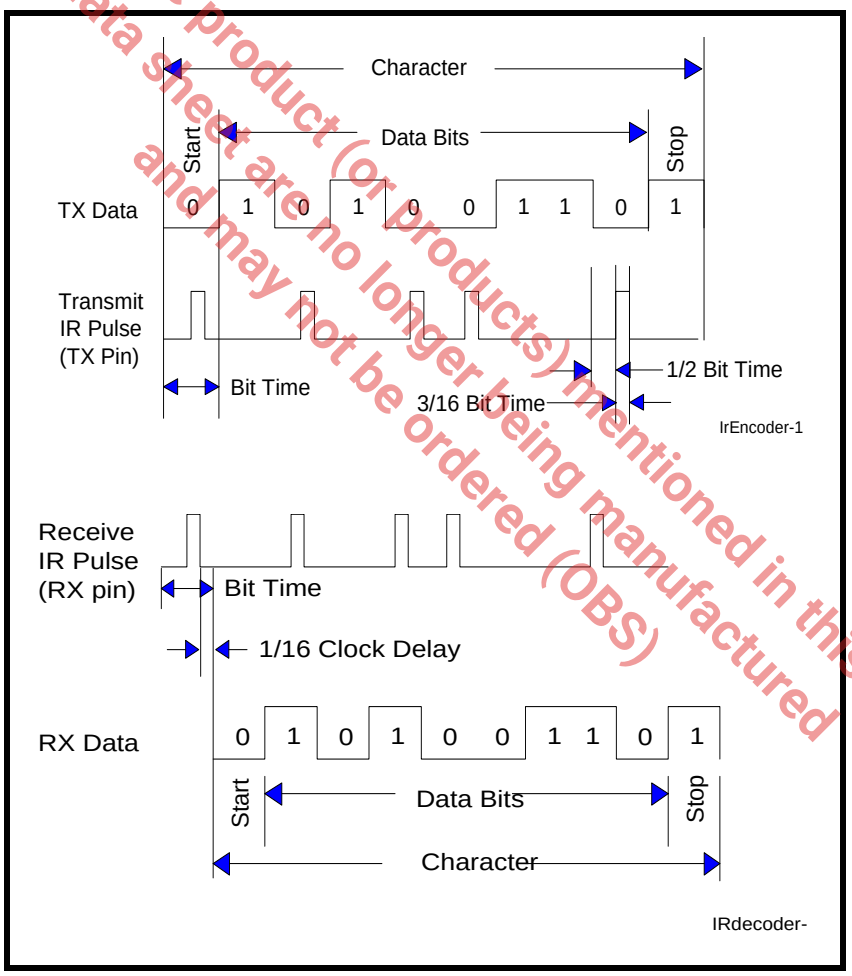

2.18 Sleep Mode with Wake-Up Interrupt and Power-Save Feature

The L570 supports low voltage system designs, hence, a sleep mode with wake-up interrupt and Power-Save feature is included to reduce power consumption when the device is not actively used.

2.18.1 Sleep Mode

All of these conditions must be satisfied for the L570 to enter sleep mode:

- no interrupts pending (ISR bit-0 = 1)
- the 16-bit divisor programmed in DLM and DLL registers is a non-zero value
- sleep mode is enabled (IER bit-4 = 1)
- modem inputs are not toggling (MSR bits 0-3 = 0)
- RX input pin is idling at a logic 1

The L570 resumes normal operation by any of the following:

- a receive data start bit transition (HIGH to LOW)
- a data byte is loaded to the transmitter, THR or FIFO
- a change of logic state on the modem or general purpose serial input CTS#

If the L570 is awakened by any one of the above conditions, it issues an interrupt as soon as the oscillator circuit is up and running and the device is ready to transmit/receive. This interrupt has the same encoding (bit-0 of ISR register = 1) as "no interrupt pending" and will clear when the ISR register is read. This will show up in the ISR register only if no other interrupts are enabled. The L570 will return to the sleep mode automatically after all interrupting conditions have been serviced and cleared. If the L570 is awakened by the modem input CTS#, a read to the MSR is required to reset the modem input. In any case, the sleep mode will not be entered while an interrupt is pending. The L570 will stay in the sleep mode of operation until it is disabled by setting IER bit-4 to a logic 0.

2.18.2 Power-Save Feature

If the address lines, data bus lines, IOW#, IOR#, CS# and modem input lines remain steady when the L570 is in sleep mode, the maximum current will be in the microamp range as specified in the DC Electrical Characteristics on page 35. If the input lines are floating or are toggling while the L570 is in sleep mode, the current can be up to 100 times more. If not using the Power-Save feature, an external buffer would be required to keep the address and data bus lines from toggling or floating to achieve the low current. But if the Power-Save feature is enabled (PwrSave pin connected to VCC), this will eliminate the need for an external buffer by internally isolating the address, data and control signals (see Figure 1 on page 1) from other bus activities that could cause wasteful power drain. The L570 enters Power-Save mode when this pin is connected to VCC and the L570 is in sleep mode (see Sleep Mode section above).

Since Power-Save mode isolates the address, data and control signals, **the device will wake-up only by**:

- a receive data start bit transition (HIGH to LOW) at the RX input or
- a change of logic state on the modem or general purpose serial input CTS#

The L570 will return to the Power-Save mode automatically after a read to the MSR (to reset the modem input CTS#) and all interrupting conditions have been serviced and cleared. The L570 will stay in the Power-Save mode of operation until it is disabled by setting IER bit-4 to a logic 0 and/or the Power-Save pin is connected to GND. **The Power-Save feature is only available in the 24-QFN package only.**

The product (or products) mentioned in this data sheet are no longer being manufactured and may not be ordered. (OBS)

2.19 Internal Loopback

The L570 UART provides an internal loopback capability for system diagnostic purposes. The internal loopback mode is enabled by setting MCR register bit-4 to logic 1. All regular UART functions operate normally including automatic hardware and software flow control. Figure 13 shows how the modem port signals are re-configured. The general purpose outputs OP1#, OP2#, the modem output DTR# and the modem inputs DSR#, RI# and CD# are not available in the 24-QFN package of the L570. However, in internal loopback mode, the DTR#, OP1# and OP2# bits in the MCR register, control the DSR#, RI# and CD# bits in the MSR register respectively. Transmit data from the transmit shift register output is internally routed to the receive shift register input allowing the system to receive the same data that it was sending. The TX pin is held HIGH while RTS# is de-asserted, and CTS# input is ignored. Caution: the RX input pins must be held HIGH during loopback test else upon exiting the loopback test the UART may detect and report a false “break” signal.

FIGURE 13. INTERNAL LOOP BACK

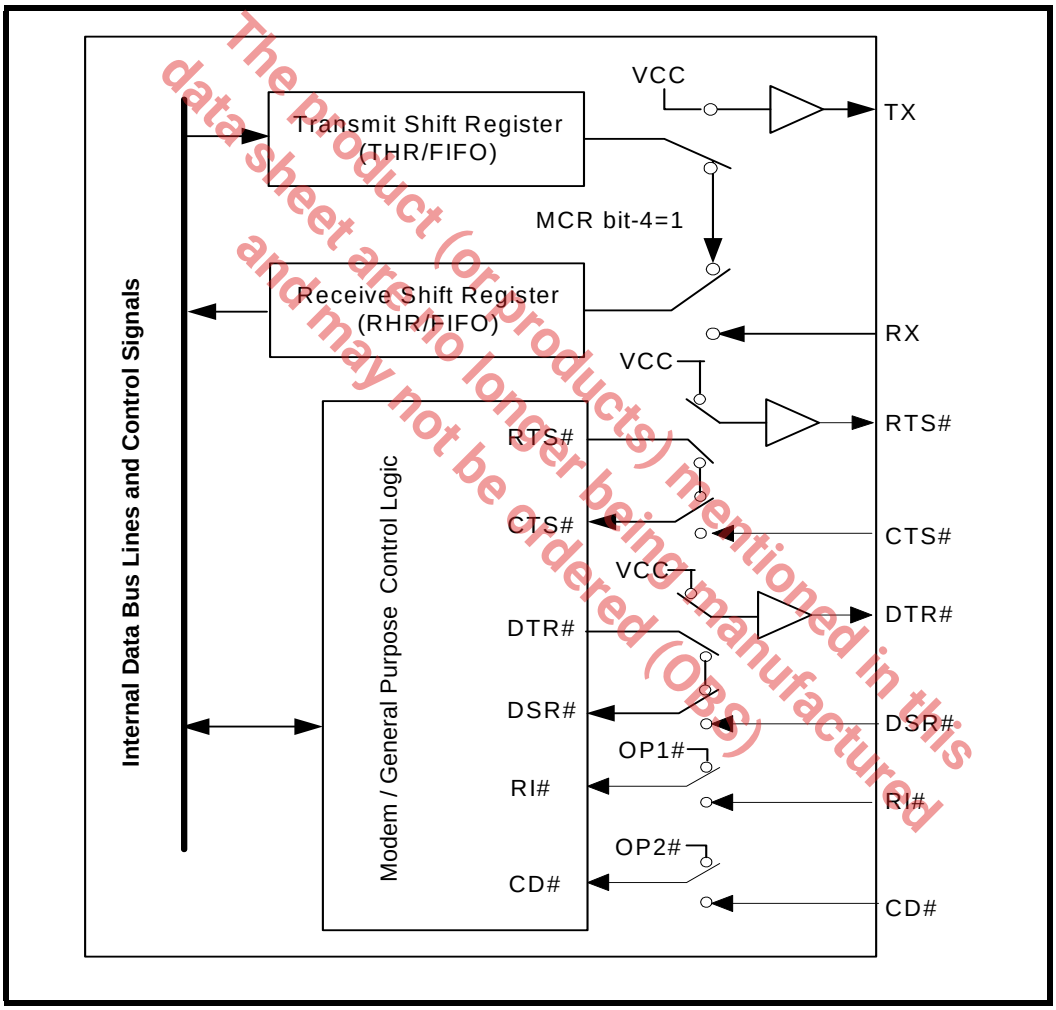

The Product (or products) mentioned in this data sheet are no longer being manufactured and may not be ordered (OBS)

3.0 UART INTERNAL REGISTERS

The L570 has a set of configuration registers selected by address lines A0, A1 and A2 with CS# asserted. The complete register set is shown on Table 5 and Table 6.

TABLE 5: UART INTERNAL REGISTERS

A2,A1,A0 ADDRESSES	REGISTER	READ/WRITE	COMMENTS
16C550 COMPATIBLE REGISTERS			
0 0 0	RHR - Receive Holding Register THR - Transmit Holding Register	Read-only Write-only	LCR[7] = 0
0 0 0	DLL - Div Latch Low Byte	Read/Write	LCR[7] = 1
0 0 1	DLM - Div Latch High Byte	Read/Write	
0 0 0	DREV - Device Revision Code	Read-only	DLL, DLM = 0x00, LCR[7] = 1
0 0 1	DVID - Device Identification Code	Read-only	
0 0 1	IER - Interrupt Enable Register	Read/Write	LCR[7] = 0
0 1 0	ISR - Interrupt Status Register FCR - FIFO Control Register	Read-only Write-only	LCR ≠ 0xBF
0 1 1	LCR - Line Control Register	Read/Write	
1 0 0	MCR - Modem Control Register	Read/Write	LCR ≠ 0xBF
1 0 1	LSR - Line Status Register Reserved	Read-only Write-only	
1 1 0	MSR - Modem Status Register Reserved	Read-only Write-only	
1 1 1	SPR - Scratchpad Register	Read/Write	LCR ≠ 0xBF
ENHANCED REGISTERS			
0 1 0	EFR - Enhanced Function Register	Read/Write	LCR = 0xBF
1 0 0	Xon-1 - Xon Character 1	Read/Write	
1 0 1	Xon-2 - Xon Character 2	Read/Write	
1 1 0	Xoff-1 - Xoff Character 1	Read/Write	
1 1 1	Xoff-2 - Xoff Character 2	Read/Write	

The product (or products) mentioned in this data sheet are no longer being manufactured and may not be ordered (OBS)

TABLE 6: INTERNAL REGISTERS DESCRIPTION. SHADED BITS ARE ENABLED WHEN EFR BIT-4=1

ADDRESS A2-A0	REG NAME	READ/ WRITE	BIT-7	BIT-6	BIT-5	BIT-4	BIT-3	BIT-2	BIT-1	BIT-0	COMMENT
16C550 Compatible Registers											
0 0 0	RHR	RD	Bit-7	Bit-6	Bit-5	Bit-4	Bit-3	Bit-2	Bit-1	Bit-0	
0 0 0	THR	WR	Bit-7	Bit-6	Bit-5	Bit-4	Bit-3	Bit-2	Bit-1	Bit-0	
0 0 1	IER	RD/WR	0/ CTS Int. Enable	0/ RTS Int. Enable	0/ Xoff Int. Enable	0/ Sleep Mode Enable	Modem Stat. Int. Enable	RX Line Stat. Int. Enable	TX Empty Int Enable	RX Data Int. Enable	LCR[7]=0
0 1 0	ISR	RD	FIFOs Enabled	FIFOs Enabled	0/ INT Source Bit-5	0/ INT Source Bit-4	INT Source Bit-3	INT Source Bit-2	INT Source Bit-1	INT Source Bit-0	LCR ≠ 0xBF
0 1 0	FCR	WR	RX FIFO Trigger	RX FIFO Trigger	0/ TX FIFO Trigger	0/ TX FIFO Trigger	DMA Mode Enable	TX FIFO Reset	RX FIFO Reset	FIFOs Enable	
0 1 1	LCR	RD/WR	Divisor Enable	Set TX Break	Set Par-ity	Even Parity	Parity Enable	Stop Bits	Word Length Bit-1	Word Length Bit-0	
1 0 0	MCR	RD/WR	0/ BRG Pres-caler	0/ IR Mode ENable	0/ XonAny	Internal Loop-back Enable	INT Out-put Enable (OP2#)	(OP1#) Invert IR RX	RTS# Output Control	DTR# Output Control	
1 0 1	LSR	RD	RX FIFO Global Error	THR & TSR Empty	THR Empty	RX Break	RX Fram-ing Error	RX Parity Error	RX Over-run Error	RX Data Ready	LCR ≠ 0xBF
1 1 0	MSR	RD	CD# Input	RI# Input	DSR# Input	CTS# Input	Delta CD#	Delta RI#	Delta DSR#	Delta CTS#	
1 1 1	SPR	RD/WR	Bit-7	Bit-6	Bit-5	Bit-4	Bit-3	Bit-2	Bit-1	Bit-0	LCR ≠ 0xBF
Baud Rate Generator Divisor											
0 0 0	DLL	RD/WR	Bit-7	Bit-6	Bit-5	Bit-4	Bit-3	Bit-2	Bit-1	Bit-0	LCR[7]=1
0 0 1	DLM	RD/WR	Bit-7	Bit-6	Bit-5	Bit-4	Bit-3	Bit-2	Bit-1	Bit-0	
0 0 0	DREV	RD	Bit-7	Bit-6	Bit-5	Bit-4	Bit-3	Bit-2	Bit-1	Bit-0	LCR[7]=1 DLL=0x00 DLM=0x00
0 0 1	DVID	RD	0	0	0	0	0	0	0	1	

The product (or products) mentioned in this datasheet are no longer being manufactured and may not be ordered (OBS)

TABLE 6: INTERNAL REGISTERS DESCRIPTION. SHADED BITS ARE ENABLED WHEN EFR BIT-4=1

ADDRESS A2-A0	REG NAME	READ/ WRITE	BIT-7	BIT-6	BIT-5	BIT-4	BIT-3	BIT-2	BIT-1	BIT-0	COMMENT
Enhanced Registers											
0 1 0	EFR	RD/WR	Auto CTS Enable	Auto RTS Enable	Special Char Select	Enable IER [7:4], ISR [5:4], FCR[5:4], MCR[7:5], MCR[2]	Soft-ware Flow Cntl Bit-3	Soft-ware Flow Cntl Bit-2	Soft-ware Flow Cntl Bit-1	Soft-ware Flow Cntl Bit-0	LCR=0xBF
1 0 0	XON1	WR	Bit-7	Bit-6	Bit-5	Bit-4	Bit-3	Bit-2	Bit-1	Bit-0	
1 0 1	XON2	WR	Bit-7	Bit-6	Bit-5	Bit-4	Bit-3	Bit-2	Bit-1	Bit-0	
1 1 0	XOFF1	WR	Bit-7	Bit-6	Bit-5	Bit-4	Bit-3	Bit-2	Bit-1	Bit-0	
1 1 1	XOFF2	WR	Bit-7	Bit-6	Bit-5	Bit-4	Bit-3	Bit-2	Bit-1	Bit-0	

The product (or products) mentioned in this data sheet are no longer being manufactured and may not be ordered (OBS)

4.0 INTERNAL REGISTER DESCRIPTIONS

4.1 Receive Holding Register (RHR) - Read- Only

SEE"RECEIVER" ON PAGE 11.

4.2 Transmit Holding Register (THR) - Write-Only

SEE"TRANSMITTER" ON PAGE 10.

4.3 Baud Rate Generator Divisors (DLL and DLM) - Read/Write

The Baud Rate Generator (BRG) is a 16-bit counter that generates the data rate for the transmitter. The rate is programmed through registers DLL and DLM which are only accessible when LCR bit-7 is set to '1'. SEE"PROGRAMMABLE BAUD RATE GENERATOR" ON PAGE 9.

4.4 Interrupt Enable Register (IER) - Read/Write

The Interrupt Enable Register (IER) masks the interrupts from receive data ready, transmit empty, line status and modem status registers. These interrupts are reported in the Interrupt Status Register (ISR).

4.4.1 IER versus Receive FIFO Interrupt Mode Operation

When the receive FIFO (FCR BIT-0 = 1) and receive interrupts (IER BIT-0 = 1) are enabled, the RHR interrupts (see ISR bits 2 and 3) status will reflect the following:

A. The receive data available interrupts are issued to the host when the FIFO has reached the programmed trigger level. It will be cleared when the FIFO drops below the programmed trigger level.

B. FIFO level will be reflected in the ISR register when the FIFO trigger level is reached. Both the ISR register status bit and the interrupt will be cleared when the FIFO drops below the trigger level.

C. The receive data ready bit (LSR BIT-0) is set as soon as a character is transferred from the shift register to the receive FIFO. It is reset when the FIFO is empty.

4.4.2 IER versus Receive/Transmit FIFO Polled Mode Operation

When FCR bit-0 equals a logic 1 for FIFO enable; resetting IER bits 0-3 enables the XR16L570 in the FIFO polled mode of operation. Since the receiver and transmitter have separate bits in the LSR either or both can be used in the polled mode by selecting respective transmit or receive control bit(s).

A. LSR BIT-0 indicates there is data in RHR or RX FIFO.

B. LSR BIT-1 indicates an overrun error has occurred and that data in the FIFO may not be valid.

C. LSR BIT 2-4 provides the type of receive data errors encountered for the data byte in RHR, if any.

D. LSR BIT-5 indicates THR is empty.

E. LSR BIT-6 indicates when both the transmit FIFO and TSR are empty.

F. LSR BIT-7 indicates a data error in at least one character in the RX FIFO.

IER[0]: RHR Interrupt Enable

The receive data ready interrupt will be issued when RHR has a data character in the non-FIFO mode or when the receive FIFO has reached the programmed trigger level in the FIFO mode.

- Logic 0 = Disable the receive data ready interrupt (default).
- Logic 1 = Enable the receiver data ready interrupt.

IER[1]: THR Interrupt Enable

This bit enables the Transmit Ready interrupt which is issued whenever the THR becomes empty in the non-FIFO mode or when data in the FIFO falls below the programmed trigger level in the FIFO mode. If the THR is empty when this bit is enabled, an interrupt will be generated.

- Logic 0 = Disable Transmit Ready interrupt (default).
- Logic 1 = Enable Transmit Ready interrupt.

IER[2]: Receive Line Status Interrupt Enable

If any of the LSR register bits 1, 2, 3 or 4 is a logic 1, it will generate an interrupt to inform the host controller about the error status of the current data byte in FIFO. LSR bit-1 generates an interrupt immediately when the character has been received. LSR bits 2-4 generate an interrupt when the character with errors is ready to be read out of the FIFO.

- Logic 0 = Disable the receiver line status interrupt (default).
- Logic 1 = Enable the receiver line status interrupt.

IER[3]: Modem Status Interrupt Enable

- Logic 0 = Disable the modem status register interrupt (default).
- Logic 1 = Enable the modem status register interrupt.

IER[4]: Sleep Mode Enable (requires EFR bit-4 = 1)

- Logic 0 = Disable Sleep Mode (default).
- Logic 1 = Enable Sleep Mode. See Sleep Mode section for further details.

IER[5]: Xoff Interrupt Enable (requires EFR bit-4=1)

- Logic 0 = Disable the software flow control, receive Xoff interrupt. (default)
- Logic 1 = Enable the software flow control, receive Xoff interrupt. See Software Flow Control section for details.

IER[6]: RTS# Output Interrupt Enable (requires EFR bit-4=1)

- Logic 0 = Disable the RTS# interrupt (default).

The product (or products) mentioned in this data sheet are no longer being manufactured and may not be ordered (OBS)

- Logic 1 = Enable the RTS# interrupt. The UART issues an interrupt when the RTS# pin makes a transition from low to high.

The product (or products) mentioned in this data sheet are no longer being manufactured and may not be ordered (OBS)

IER[7]: CTS# Input Interrupt Enable (requires EFR bit-4=1)

- Logic 0 = Disable the CTS# interrupt (default).
- Logic 1 = Enable the CTS# interrupt. The UART issues an interrupt when CTS# pin makes a transition from low to high.

4.5 Interrupt Status Register (ISR) - Read-Only

The UART provides multiple levels of prioritized interrupts to minimize external software interaction. The Interrupt Status Register (ISR) provides the user with six interrupt status bits. Performing a read cycle on the ISR will give the user the current highest pending interrupt level to be serviced, others are queued up to be serviced next. No other interrupts are acknowledged until the pending interrupt is serviced. The Interrupt Source Table, **Table 7**, shows the data values (bit 0-5) for the interrupt priority levels and the interrupt sources associated with each of these interrupt levels.

4.5.1 Interrupt Generation:

- LSR is by any of the LSR bits 1, 2, 3 and 4.
- RXRDY is by RX trigger level.
- RXRDY Time-out is by a 4-char plus 12 bits delay timer.
- TXRDY is by TX trigger level or TX FIFO empty.
- MSR is by any of the MSR bits 0, 1, 2 and 3.
- Receive Xoff/Special character is by detection of a Xoff or Special character.
- CTS# is when its transmitter toggles the input pin (from low to high) during auto CTS flow control enabled by EFR bit-7.
- RTS# is when its receiver toggles the output pin (from low to high) during auto RTS flow control enabled by EFR bit-6.
- Wake-up Interrupt is when the device wakes up from sleep mode. See Sleep Mode section for more details.

4.5.2 Interrupt Clearing:

- LSR interrupt is cleared by reading the LSR register (but FIFO error bit does not clear until the character(s) that generated the interrupt(s) is (are) read from the FIFO).
- RXRDY interrupt is cleared by reading data until FIFO falls below the trigger level.
- RXRDY Time-out interrupt is cleared by reading the RHR register.
- TXRDY interrupt is cleared by reading the ISR register or writing to the THR register.
- MSR interrupt is cleared by reading the MSR register.
- Xoff interrupt is cleared by reading the ISR or when Xon character(s) is received.
- Special character interrupt is cleared by reading the ISR or after the next character is received.
- RTS# and CTS# flow control interrupts are cleared by reading the MSR register.
- Wake-up interrupt is cleared by reading the ISR register.

The product (or products) mentioned in this data sheet are no longer being manufactured and may not be ordered (OBS)

TABLE 7: INTERRUPT SOURCE AND PRIORITY LEVEL

PRIORITY LEVEL	ISR REGISTER STATUS BITS						SOURCE OF INTERRUPT
	BIT-5	BIT-4	BIT-3	BIT-2	BIT-1	BIT-0	
1	0	0	0	1	1	0	LSR (Receiver Line Status Register)
2	0	0	1	1	0	0	RXRDY (Receive Data Time-out)
3	0	0	0	1	0	0	RXRDY (Received Data Ready)
4	0	0	0	0	1	0	TXRDY (Transmit Ready)
5	0	0	0	0	0	0	MSR (Modem Status Register)
6	0	1	0	0	0	0	RXRDY (Received Xoff or Special character)
7	1	0	0	0	0	0	CTS#, RTS# change of state
-	0	0	0	0	0	1	None (default) or Wake-up Interrupt

The product (or Product) mentioned in this data sheet are no longer being manufactured and may not be ordered (OBS)

ISR[0]: Interrupt Status

- Logic 0 = An interrupt is pending and the ISR contents may be used as a pointer to the appropriate interrupt service routine.
- Logic 1 = No interrupt pending (default condition) or wake-up interrupt. The wake-up interrupt is issued when the L570 has been awakened from sleep mode.

ISR[3:1]: Interrupt Status

These bits indicate the source for a pending interrupt at interrupt priority levels (See Interrupt Source Table 7).

ISR[5:4]: Interrupt Status

These bits are enabled when EFR bit-4 is set to a logic 1. ISR bit-4 indicates that the receiver detected a data match of the Xoff character(s). Note that once set to a logic 1, the ISR bit-4 will stay a logic 1 until a Xon character is received. ISR bit-5 indicates that CTS# or RTS# has changed state.

ISR[7:6]: FIFO Enable Status

These bits are set to a logic 0 when the FIFOs are disabled. They are set to a logic 1 when the FIFOs are enabled.

4.6 FIFO Control Register (FCR) - Write-Only

This register is used to enable the FIFOs, clear the FIFOs, set the transmit/receive FIFO trigger levels, and select the DMA mode. The DMA, and FIFO modes are defined as follows:

FCR[0]: TX and RX FIFO Enable

- Logic 0 = Disable the transmit and receive FIFO (default).
- Logic 1 = Enable the transmit and receive FIFOs. This bit must be set to logic 1 when other FCR bits are written or they will not be programmed.

FCR[1]: RX FIFO Reset

This bit is only active when FCR bit-0 is a '1'.

- Logic 0 = No receive FIFO reset (default)
- Logic 1 = Reset the receive FIFO pointers and FIFO level counter logic (the receive shift register is not cleared or altered). This bit will return to a logic 0 after resetting the FIFO.

FCR[2]: TX FIFO Reset

This bit is only active when FCR bit-0 is a '1'.

- Logic 0 = No transmit FIFO reset (default).
- Logic 1 = Reset the transmit FIFO pointers and FIFO level counter logic (the transmit shift register is not cleared or altered). This bit will return to a logic 0 after resetting the FIFO.

FCR[3]: DMA Mode Select (Legacy)

This bit has no function and should be left at '0'.

FCR[5:4]: Transmit FIFO Trigger Select

('00' = default, TX trigger level = 1)

These 2 bits set the trigger level for the transmit FIFO. The UART will issue a transmit interrupt when the number of characters in the FIFO falls below the selected trigger level, or when it gets empty in case that the FIFO did not get filled over the trigger level on last re-load. Table 8 below shows the selections. EFR bit-4 must be set to '1' before these bits can be accessed.

FCR[7:6]: Receive FIFO Trigger Select

('00' = default, RX trigger level =1)

These 2 bits are used to set the trigger level for the receive FIFO. The UART will issue a receive interrupt when the number of the characters in the FIFO crosses the trigger level. Table 8 shows the selections.

The product (or products) mentioned in this datasheet are no longer being manufactured and may not be ordered (OBS)

TABLE 8: TRANSMIT AND RECEIVE FIFO TRIGGER LEVEL SELECTION

FCR BIT-7	FCR BIT-6	FCR BIT-5	FCR BIT-4	RECEIVE TRIGGER LEVEL	TRANSMIT TRIGGER LEVEL	COMPATIBILITY
		0	0		1 (default)	16C580 and 16L580 compatible.
		0	1		4	
		1	0		8	
		1	1		14	
0	0			1 (default)		16C550, 16C580, 16L580, 16C554, 16C2550 and 16C2552 compatible
0	1			4		
1	0			8		
1	1			14		

4.7 Line Control Register (LCR) - Read/Write

The Line Control Register is used to specify the asynchronous data communication format. The word or character length, the number of stop bits, and the parity are selected by writing the appropriate bits in this register.

LCR[1:0]: TX and RX Word Length Select

These two bits specify the word length to be transmitted or received.

BIT-1	BIT-0	WORD LENGTH
0	0	5 (default)
0	1	6
1	0	7
1	1	8

LCR[2]: TX and RX Stop-bit Length Select

The length of stop bit is specified by this bit in conjunction with the programmed word length.

BIT-2	WORD LENGTH	STOP BIT LENGTH (BIT TIME(S))
0	5,6,7,8	1 (default)
1	5	1-1/2
1	6,7,8	2

LCR[3]: TX and RX Parity Select

Parity or no parity can be selected via this bit. The parity bit is a simple way used in communications for data integrity check. See Table 9 for parity selection summary below.

- Logic 0 = No parity.
- Logic 1 = A parity bit is generated during the transmission while the receiver checks for parity error of the data character received.

LCR[4]: TX and RX Parity Select

If the parity bit is enabled with LCR bit-3 set to a logic 1, LCR BIT-4 selects the even or odd parity format.

- Logic 0 = ODD Parity is generated by forcing an odd number of logic 1's in the transmitted character. The receiver must be programmed to check the same format (default).
- Logic 1 = EVEN Parity is generated by forcing an even number of logic 1's in the transmitted character. The receiver must be programmed to check the same format.

LCR[5]: TX and RX Parity Select

If the parity bit is enabled, LCR BIT-5 selects the forced parity format.

- LCR BIT-5 = logic 0, parity is not forced (default).
- LCR BIT-5 = logic 1 and LCR BIT-4 = logic 0, parity bit is forced to a logical 1 for the transmit and receive data.
- LCR BIT-5 = logic 1 and LCR BIT-4 = logic 1, parity bit is forced to a logical 0 for the transmit and receive data.

The product (or products) mentioned in this data sheet are no longer being manufactured and may not be ordered (OBS)

TABLE 9: PARITY SELECTION

LCR BIT-5	LCR BIT-4	LCR BIT-3	PARITY SELECTION
X	X	0	No parity
0	0	1	Odd parity
0	1	1	Even parity
1	0	1	Force parity to mark, "1"
1	1	1	Forced parity to space, "0"

LCR[6]: Transmit Break Enable

When enabled, the Break control bit causes a break condition to be transmitted (the TX output is forced to a "space', logic 0, state). This condition remains, until disabled by setting LCR bit-6 to a logic 0.

- Logic 0 = No TX break condition (default).
- Logic 1 = Forces the transmitter output (TX) to a "space", logic 0, for alerting the remote receiver of a line break condition.

LCR[7]: Baud Rate Divisors Enable

Baud rate generator divisor (DLL/DLM) enable.

- Logic 0 = Data registers are selected (default).
- Logic 1 = Divisor latch registers are selected.

4.8 Modem Control Register (MCR) or General Purpose Outputs Control - Read/Write

The MCR register is used for controlling the serial/modem interface signals or general purpose inputs/outputs.

MCR[0]: DTR# Output

The DTR# pin is not available in the 24-QFN package of the L570. This bit is used to control the status of the DSR bit in the MSR register in the internal loopback mode.

- Logic 0 = Set DTR bit to be 0 (default)
- Logic 1 = Set DTR bit to be 1.

MCR[1]: RTS# Output

The RTS# pin is a modem control output and may be used for automatic hardware flow control by enabled by EFR bit-6. If the modem interface is not used, this output may be used as a general purpose output.

- Logic 0 = Force RTS# output to a logic 1 (default).
- Logic 1 = Force RTS# output to a logic 0.

MCR[2]: Invert Infrared RX Data or OP1# (legacy term)

If IrDA mode is enabled by setting MCR[6]=1 and if EFR[4] = 1, this bit acts as 'Invert Infrared RX data' command. If EFR[4] = 0 or in internal loopback mode, this bit functions like the OP1# in the 16C550.

- Logic 0 = Select RX input as active-low encoded IrDA data (if IrDA Mode is enabled by setting MCR[6] = 1 and EFR[4] = 1) (default).
- Logic 1 = Select RX input as active-high encoded IrDA data (if MCR[6] = 1 and EFR[4] = 1). In this mode, this bit is write-only.

In the Internal Loopback Mode, this bit controls the state of the modem input RI# bit in the MSR register as shown in **Figure 13**.

MCR[3]: INT Output Enable or OP2# (legacy term)

This bit enables and disables the operation of interrupt output.

- Logic 0 = INT output disabled (three state mode) (default).
- Logic 1 = INT output enabled (active mode).

In the Internal Loopback Mode, this bit functions like the OP2# in the 16C550 and is used to set the state of the modem input CD# bit in the MSR register.

The product (or products) mentioned in this data sheet are no longer being manufactured and may not be ordered. (OBS)

MCR[4]: Internal Loopback Enable

- Logic 0 = Disable loopback mode (default).
- Logic 1 = Enable local loopback mode, see loopback section and **Figure 13**.

MCR[5]: Xon-Any Enable

- Logic 0 = Disable Xon-Any function (for 16C550 compatibility, default).
- Logic 1 = Enable Xon-Any function. In this mode, any RX character received will resume transmit operation. The RX character will be loaded into the RX FIFO, unless the RX character is an Xon or Xoff character and the L570 is programmed to use the Xon/Xoff flow control.

MCR[6]: Infrared Encoder/Decoder Enable

- Logic 0 = Enable the standard modem receive and transmit input/output interface (default).
- Logic 1 = Enable infrared IrDA receive and transmit inputs/outputs. The TX/RX output/input are routed to the infrared encoder/decoder. The data input and output levels conform to the IrDA infrared interface requirement. While in this mode, the infrared TX output will be a logic 0 during idle data conditions.

MCR[7]: BRG Clock Prescaler Select

- Logic 0 = Divide by one. The input clock from the external clock is fed directly to the Programmable Baud Rate Generator without further modification, i.e., divide by one (default).
- Logic 1 = Divide by four. The prescaler divides the input clock from the external clock by four and feeds it to the Programmable Baud Rate Generator, hence, data rates get reduced 4 times.

4.9 Line Status Register (LSR) - Read Only

This register provides the status of data transfers between the UART and the host.

LSR[0]: Receive Data Ready Indicator

- Logic 0 = No data in receive holding register or FIFO (default).
- Logic 1 = Data has been received and is saved in the receive holding register or FIFO.

LSR[1]: Receiver Overrun Flag

- Logic 0 = No overrun error (default).
- Logic 1 = Overrun error. A data overrun error condition occurred in the receive shift register. This happens when additional data arrives while the FIFO is full. In this case the previous data in the receive shift register is overwritten. Note that under this condition the data byte in the receive shift register is not transferred into the FIFO, therefore the data in the FIFO is not corrupted by the error.

LSR[2]: Receive Data Parity Error Flag

- Logic 0 = No parity error (default).
- Logic 1 = Parity error. The receive character in RHR does not have correct parity information and is suspect. This error is associated with the character available for reading in RHR.

LSR[3]: Receive Data Framing Error Flag

- Logic 0 = No framing error (default).
- Logic 1 = Framing error. The receive character did not have a valid stop bit(s). This error is associated with the character available for reading in RHR.

The product(s) mentioned in this data sheet are no longer being manufactured and may not be ordered (OBS)

LSR[4]: Receive Break Flag

- Logic 0 = No break condition (default).
- Logic 1 = The receiver received a break signal (RX was a logic 0 for at least one character frame time). In the FIFO mode, only one break character is loaded into the FIFO. The break indication remains until the RX input returns to the idle condition, “mark” or logic 1.

LSR[5]: Transmit Holding Register Empty Flag

This bit is the Transmit Holding Register Empty indicator. The THR bit is set to a logic 1 when the last data byte is transferred from the transmit holding register to the transmit shift register. The bit is reset to logic 0 concurrently with the data loading to the transmit holding register by the host. In the FIFO mode this bit is set when the transmit FIFO is empty, it is cleared when the transmit FIFO contains at least 1 byte.

LSR[6]: THR and TSR Empty Flag

This bit is set to a logic 1 whenever the transmitter goes idle. It is set to logic 0 whenever either the THR or TSR contains a data character. In the FIFO mode this bit is set to a logic 1 whenever the transmit FIFO and transmit shift register are both empty.

LSR[7]: Receive FIFO Data Error Flag

- Logic 0 = No FIFO error (default).
- Logic 1 = A global indicator for the sum of all error bits in the RX FIFO. At least one parity error, framing error or break indication is in the FIFO data. This bit clears when there is no more error(s) in any of the bytes in the RX FIFO.

4.10 Modem Status Register (MSR) - Read Only

This register provides the current state of the modem interface input signals. Lower four bits of this register are used to indicate the changed information. These bits are set to a logic 1 whenever a signal from the modem changes state. These bits may be used for general purpose inputs when they are not used with modem signals.

MSR[0]: Delta CTS# Input Flag

- Logic 0 = No change on CTS# input (default).
- Logic 1 = The CTS# input has changed state since the last time it was monitored. A modem status interrupt will be generated if MSR interrupt is enabled (IER bit-3).

MSR[1]: Delta DSR# Input Flag

Since the 24-QFN package of the L570 does not have the DSR# modem input, this bit has functionality only in internal loopback mode when the DSR bit (MSR[4]) can be controlled via the DTR bit (MCR[0]).

- Logic 0 = No change on DSR# input (default).
- Logic 1 = The DSR# input has changed state since the last time it was monitored. A modem status interrupt will be generated if MSR interrupt is enabled (IER bit-3).

MSR[2]: Delta RI# Input Flag

Since the 24-QFN package of the L570 does not have the RI# modem input, this bit has functionality only in internal loopback mode when the RI bit (MSR[6]) can be controlled via the OP1# bit (MCR[2]).

- Logic 0 = No change on RI# input (default).
- Logic 1 = The RI# input has changed from a logic 0 to a logic 1, ending of the ringing signal. A modem status interrupt will be generated if MSR interrupt is enabled (IER bit-3).

The product (or products) mentioned in this data sheet are no longer being manufactured and may not be ordered (OBS)

MSR[3]: Delta CD# Input Flag

Since the 24-QFN package of the L570 does not have the CD# modem input, this bit has functionality only in internal loopback mode when the CD bit (MSR[7]) can be controlled via the OP2# bit (MCR[3]).

- Logic 0 = No change on CD# input (default).
- Logic 1 = Indicates that the CD# input has changed state since the last time it was monitored. A modem status interrupt will be generated if MSR interrupt is enabled (IER bit-3).

MSR[4]: CTS Input Status

CTS# pin may function as automatic hardware flow control signal input if it is enabled and selected by Auto CTS (EFR bit-7). Auto CTS flow control allows starting and stopping of local data transmissions based on the modem CTS# signal. A logic 1 on the CTS# pin will stop UART transmitter as soon as the current character has finished transmission, and a logic 0 will resume data transmission. Normally MSR bit-4 bit is the complement of the CTS# input. However in the loopback mode, this bit is equivalent to the RTS# bit in the MCR register. The CTS# input may be used as a general purpose input when the modem interface is not used.

MSR[5]: DSR Input Status

Normally MSR bit-5 is the complement of the DSR# input in the 32-QFN package. In internal loopback mode, this bit is equivalent to the DTR# bit (MCR[0]). The 24-QFN package of the L570 does not have the DSR# modem input.

MSR[6]: RI Input Status

Normally MSR bit-6 is the complement of the RI# input in the 32-QFN package. In internal loopback mode, this bit is equivalent to the OP1# bit (MCR[2]). The 24-QFN package of the L570 does not have the RI# modem input.

MSR[7]: CD Input Status

Normally MSR bit-5 is the complement of the CD# input in the 32-QFN package. In internal loopback mode, this bit is equivalent to the OP2# bit (MCR[3]). The 24-QFN package of the L570 does not have the CD# modem input.

4.11 Scratchpad Register (SPR) - Read/Write

This is a 8-bit general purpose register for the user to store temporary data. The content of this register is preserved during sleep mode but becomes 0xFF (default) after a reset or a power off-on cycle.

4.12 Baud Rate Generator Registers (DLL and DLM) - Read/Write

The concatenation of the contents of DLM and DLL gives the 16-bit divisor value which is used to calculate the baud rate:

- Baud Rate = (Clock Frequency / 16) / Divisor

See MCR bit-7 and the baud rate table also.

4.13 Device Identification Register (DVID) - Read Only

This register contains the device ID (0x01 for XR16L570). Prior to reading this register, DLL and DLM should be set to 0x00.

4.14 Device Revision Register (DREV) - Read Only

This register contains the device revision information. For example, 0x01 means revision A. Prior to reading this register, DLL and DLM should be set to 0x00.

The product (or products) mentioned in this data sheet are no longer being manufactured and may not be ordered (OBS)

4.15 Enhanced Feature Register (EFR)

Enhanced features are enabled or disabled using this register. Bit 0-3 provide single or dual consecutive character software flow control selection (see Table 10). When the Xon1 and Xon2 and Xoff1 and Xoff2 modes are selected, the double 8-bit words are concatenated into two sequential characters. Caution: note that whenever changing the TX or RX flow control bits, always reset all bits back to logic 0 (disable) before programming a new setting.

EFR[3:0]: Software Flow Control Select

Single character and dual sequential characters software flow control is supported. Combinations of software flow control can be selected by programming these bits.

TABLE 10: SOFTWARE FLOW CONTROL FUNCTIONS

EFR BIT-3 CONT-3	EFR BIT-2 CONT-2	EFR BIT-1 CONT-1	EFR BIT-0 CONT-0	TRANSMIT AND RECEIVE SOFTWARE FLOW CONTROL
0	0	0	0	No TX and RX flow control (default and reset)
0	0	X	X	No transmit flow control
1	0	X	X	Transmit Xon1, Xoff1
0	1	X	X	Transmit Xon2, Xoff2
1	1	X	X	Transmit Xon1 and Xon2, Xoff1 and Xoff2
X	X	0	0	No receive flow control
X	X	1	0	Receiver compares Xon1, Xoff1
X	X	0	1	Receiver compares Xon2, Xoff2
1	0	1	1	Transmit Xon1, Xoff1 Receiver compares Xon1 or Xon2, Xoff1 or Xoff2
0	1	1	1	Transmit Xon2, Xoff2 Receiver compares Xon1 or Xon2, Xoff1 or Xoff2
1	1	1	1	Transmit Xon1 and Xon2, Xoff1 and Xoff2, Receiver compares Xon1 and Xon2, Xoff1 and Xoff2
0	0	1	1	No transmit flow control, Receiver compares Xon1 and Xon2, Xoff1 and Xoff2

The product (or products) mentioned in this data sheet are no longer being manufactured and may not be ordered (OBS)

EFR[4]: Enhanced Function Bits Enable

Enhanced function control bit. This bit enables IER bits 4-7, ISR bits 4-5, FCR bits 4-5, MCR bits 2, 5, 6 and 7 to be modified. After modifying any enhanced bits, EFR bit-4 can be set to a logic 0 to latch the new values. This feature prevents legacy software from altering or overwriting the enhanced functions once set. Normally, it is recommended to leave it enabled, logic 1.

- Logic 0 = modification disable/latch enhanced features. IER bits 4-7, ISR bits 4-5, FCR bits 4-5, and MCR bits 2, 5-7 are saved to retain the user settings. After a reset, the IER bits 4-7, ISR bits 4-5, FCR bits 4-5, and MCR bits 2, 5-7 are set to a logic 0 to be compatible with ST16C550 mode (default).
- Logic 1 = Enables the above-mentioned register bits to be modified by the user.

EFR[5]: Special Character Detect Enable

- Logic 0 = Special Character Detect Disabled (default).
- Logic 1 = Special Character Detect Enabled. The UART compares each incoming receive character with data in Xoff-2 register. If a match exists, the receive data will be transferred to FIFO and ISR bit-4 will be set to indicate detection of the special character. Bit-0 corresponds with the LSB bit of the receive character. If flow control is set for comparing Xon1, Xoff1 (EFR [1:0]= '10') then flow control and special character work normally. However, if flow control is set for comparing Xon2, Xoff2 (EFR[1:0]= '01') then flow control works normally, but Xoff2 will not go to the FIFO, and will generate an Xoff interrupt and a special character interrupt, if enabled via IER bit-5.

EFR[6]: Auto RTS Flow Control Enable

RTS# output may be used for hardware flow control by setting EFR bit-6 to logic 1. When Auto RTS is selected, an interrupt will be generated when the receive FIFO is filled to the programmed trigger level and RTS de-asserts to a logic 1 at one trigger level above the programmed trigger level. RTS# will return to a logic 0 when FIFO data falls below one trigger level below the programmed trigger level. The RTS# output must be asserted (logic 0) before the auto RTS can take effect. RTS# pin will function as a general purpose output when hardware flow control is disabled.

- Logic 0 = Automatic RTS flow control is disabled (default).
- Logic 1 = Enable Automatic RTS flow control.

EFR[7]: Auto CTS Flow Control Enable

Automatic CTS Flow Control.

- Logic 0 = Automatic CTS flow control is disabled (default).
- Logic 1 = Enable Automatic CTS flow control. Data transmission stops when CTS# input de-asserts to logic 1. Data transmission resumes when CTS# returns to a logic 0.

4.16 Software Flow Control Registers (XOFF1, XOFF2, XON1, XON2) - Write Only

These registers are used as the programmable software flow control characters xoff1, xoff2, xon1, and xon2. For more details, refer to **"Section 2.15, Auto Xon/Xoff (Software) Flow Control" on page 15**.

The product (or product(s) mentioned in this data sheet) are no longer being manufactured and may not be ordered (OBS)

TABLE 11: UART RESET CONDITIONS FOR CHANNEL A AND B

REGISTERS	RESET STATE
DLM and DLL	Bits 15-0 = 0x0001. Resets upon power up only and not when only the Reset Pin is asserted.
RHR	Bits 7-0 = 0xXX
THR	Bits 7-0 = 0xXX
IER	Bits 7-0 = 0x00
FCR	Bits 7-0 = 0x00
ISR	Bits 7-0 = 0x01
LCR	Bits 7-0 = 0x00
MCR	Bits 7-0 = 0x00
LSR	Bits 7-0 = 0x60
MSR	Bits 7-5, 3-0 = Logic 0 Bits 4 = Logic level of the CTS# input inverted
SPR	Bits 7-0 = 0xFF
EFR	Bits 7-0 = 0x00
XON1	Bits 7-0 = 0x00
XON2	Bits 7-0 = 0x00
XOFF1	Bits 7-0 = 0x00
XOFF2	Bits 7-0 = 0x00
I/O SIGNALS	**RESET STATE**
TX	HIGH
RTS#	HIGH
DTR#	HIGH
INT	Three-State Condition

The product (or products) mentioned in this data sheet are no longer being manufactured and may not be ordered (OBS)

ABSOLUTE MAXIMUM RATINGS

Power Supply Range	7 Volts
Voltage at Any Pin	GND-0.3 V to 7 V
Operating Temperature	-40° to +85°C
Storage Temperature	-65° to +150°C
Package Dissipation	500 mW

TYPICAL PACKAGE THERMAL RESISTANCE DATA (MARGIN OF ERROR: ± 15%)

Thermal Resistance (24-QFN)	theta-ja = 38°C/W, theta-jc = 26°C/W
Thermal Resistance (32-QFN)	theta-ja = 33°C/W, theta-jc = 22°C/W

DC ELECTRICAL CHARACTERISTICS

UNLESS OTHERWISE NOTED: TA= -40° TO +85°C, VCC=2.97 - 5.5V

SYMBOL	PARAMETER	LIMITS 3.3V MIN	LIMITS 3.3V MAX	LIMITS 5.0V MIN	LIMITS 5.0V MAX	UNITS	CONDITIONS
V_{ILCK}	Clock Input Low Level	-0.3	0.6	-0.5	0.6	V	
V_{IHCK}	Clock Input High Level	2.4	VCC	3.0	VCC	V	
V_{IL}	Input Low Voltage	-0.3	0.8	-0.5	0.8	V	
V_{IH}	Input High Voltage	2.0	5.5	2.2	5.5	V	
V_{OL}	Output Low Voltage		 0.4		0.4	V V	I_{OL} = 6 mA I_{OL} = 4 mA
V_{OH}	Output High Voltage	 2.0		2.4		V V	I_{OH} = -6 mA I_{OH} = -1 mA
I_{IL}	Input Low Leakage Current		±10		±10	uA	
I_{IH}	Input High Leakage Current		±10		±10	uA	
C_{IN}	Input Pin Capacitance		5		5	pF	
I_{CC}	Power Supply Current		2		3	mA	
I_{SLEEP}/I_{PWRSV}	Sleep / Power-Save Current		15		30	uA	See Test

The product (or product(s) mentioned in this data sheet are no longer being manufactured and may not be ordered (OBS)

DC ELECTRICAL CHARACTERISTICS

UNLESS OTHERWISE NOTED: TA= -40° TO +85°C, VCC=1.62 - 2.75V

SYMBOL	PARAMETER	LIMITS 1.8V MIN	LIMITS 1.8V MAX	LIMITS 2.5V MIN	LIMITS 2.5V MAX	UNITS	CONDITIONS
V_{ILCK}	Clock Input Low Level	-0.3	0.3	-0.3	0.6	V	
V_{IHCK}	Clock Input High Level	1.4	VCC	1.8	VCC	V	
V_{IL}	Input Low Voltage	-0.3	0.2	-0.3	0.5	V	
V_{IH}	Input High Voltage	1.4	5.5	1.8	5.5	V	
V_{OL}	Output Low Voltage		 0.4		0.4	V V	I_{OL} = 2 mA I_{OL} = 1.5 mA
V_{OH}	Output High Voltage	 1.4		1.8		V V	I_{OH} = -400 uA I_{OH} = -200 uA
I_{IL}	Input Low Leakage Current		±10		±10	uA	
I_{IH}	Input High Leakage Current		±10		±10	uA	
C_{IN}	Input Pin Capacitance		5		5	pF	
I_{CC}	Power Supply Current		0.5		1	mA	
I_{SLEEP}/I_{PWRSV}	Sleep Current		3		6	uA	See Test

Test: The following inputs must remain steady at VCC or GND state to minimize sleep current: A0-A2, D0-D7, IOR#, IOW#, CS# and all modem inputs. Also, RX input must idle at logic 1 state while asleep. Floating inputs may result in sleep currents in the mA range.

For PowerSave, the UART internally isolates all of these inputs (except the modem input CTS# and Reset pins) therefore eliminating any unnecessary external buffers to keep the inputs steady. **SEE"POWER-SAVE FEATURE" ON PAGE 17.** To achieve minimum power drain, the voltage at any of the inputs of the L570 should NOT be lower than its VCC supply.

AC ELECTRICAL CHARACTERISTICS

UNLESS OTHERWISE NOTED: TA= -40° TO +85°C, VCC=2.97 - 5.5V, 70 PF LOAD WHERE APPLICABLE

SYMBOL	PARAMETER	LIMITS 3.3		LIMITS 5.0		UNIT
		MIN	MAX	MIN	MAX	
-	Crystal Oscillator Frequency		20		24	MHz
OSC	External Clock Frequency*		33		50	MHz
CLK	External Clock Low/High Time*	15		10		ns
T_{AS}	Address Setup Time	5		10		ns
T_{AH}	Address Hold Time	0		0		ns
T_{CS}	Chip Select Width	50		30		ns
T_{RD}	IOR# Strobe Width	50		30		ns
T_{DY}	Read Cycle Delay	50		30		ns
T_{RDV}	Data Access Time		50		25	ns
T_{DD}	Data Disable Time	0	20	0	20	ns
T_{WR}	IOW# Strobe Width	50		30		ns
T_{DY}	Write Cycle Delay	50		30		ns
T_{DS}	Data Setup Time	15		12		ns
T_{DH}	Data Hold Time	3		5		ns
T_{WDO}	Delay From IOW# To Output		75		50	ns
T_{MOD}	Delay To Set Interrupt From MODEM Input		75		50	ns
T_{RSI}	Delay To Reset Interrupt From IOR#		75		50	ns
T_{SSI}	Delay From Stop To Set Interrupt		1		1	Bclk
T_{RRI}	Delay From IOR# To Reset Interrupt		75		50	ns
T_{SI}	Delay From Stop To Interrupt		75		50	ns
T_{INT}	Delay From Initial INT Reset To Transmit Start	8	24	8	24	Bclk
T_{WRI}	Delay From IOW# To Reset Interrupt		75		50	ns
T_{RST}	Reset Pulse Width	40		40		ns
N	Baud Rate Divisor	1	2^{16}-1	1	2^{16}-1	-
Bclk	Baud Clock	16X of data rate				Hz

*NOTE: * For faster data rates, see the data rate characterization data on page 38.*

The product (or products) mentioned in this data sheet are no longer being manufactured and may not be ordered (OBS)

AC ELECTRICAL CHARACTERISTICS

UNLESS OTHERWISE NOTED: TA= -40° TO +85°C, VCC=1.62 - 2.75V, 70 PF LOAD WHERE APPLICABLE

SYMBOL	PARAMETER	LIMITS 1.8 MIN	LIMITS 1.8 MAX	LIMITS 2.5 MIN	LIMITS 2.5 MAX	UNIT
-	Crystal Oscillator Frequency		12		18	MHz
OSC	External Clock Frequency*		12		24	MHz
CLK	External Clock Low/High Time*	40		20		ns
T_{AS}	Address Setup Time	5		5		ns
T_{AH}	Address Hold Time	0		0		ns
T_{CS}	Chip Select Width	250		100		ns
T_{RD}	IOR# Strobe Width	250		100		ns
T_{DY}	Read Cycle Delay	250		100		ns
T_{RDV}	Data Access Time		175		75	ns
T_{DD}	Data Disable Time	0	30	0	30	ns
T_{WR}	IOW# Strobe Width	250		100		ns
T_{DY}	Write Cycle Delay	250		100		ns
T_{DS}	Data Setup Time	75		25		ns
T_{DH}	Data Hold Time	3		3		ns
T_{WDO}	Delay From IOW# To Output		200		150	ns
T_{MOD}	Delay To Set Interrupt From MODEM Input		200		150	ns
T_{RSI}	Delay To Reset Interrupt From IOR#		200		150	ns
T_{SSI}	Delay From Stop To Set Interrupt		1		1	Bclk
T_{RRI}	Delay From IOR# To Reset Interrupt		200		150	ns
T_{SI}	Delay From Stop To Interrupt		200		150	ns
T_{INT}	Delay From Initial INT Reset To Transmit Start	8	24	8	24	Bclk
T_{WRI}	Delay From IOW# To Reset Interrupt		200		150	ns
T_{RST}	Reset Pulse Width	40		40		ns
N	Baud Rate Divisor	1	2^{16}-1	1	2^{16}-1	-
Bclk	Baud Clock	16X of data rate				Hz

*NOTE: * For faster data rates, see the data rate characterization data on page 38.*

The product (or products) mentioned in this datasheet are no longer being manufactured and may not be ordered (OBS)

DATA RATE CHARACTERIZATION AT 5V

OPERATING TEMPERATURE RANGE = -40° TO +85°C

PARAMETER	MIN	TYP	MAX	UNIT
Supply Voltage, VCC	4.5	5	5.5	V
Input High Voltage, V_{IH}	0.6*VCC			V
Input Low Voltage, V_{IL}			0.6	V
External Clock/Oscillator Frequency			64	MHz
External Clock Low/High Time	8			ns
Serial Data Rate			4	Mbps

DATA RATE CHARACTERIZATION AT 3.3V

OPERATING TEMPERATURE RANGE = -40° TO +85°C

PARAMETER	MIN	TYP	MAX	UNIT
Supply Voltage	2.97	3.3	3.63	V
Input High Voltage, V_{IH}	2.4			V
Input Low Voltage, V_{IL}			0.6	V
External Clock/Oscillator Frequency			48	MHz
External Clock Low/High Time	10			ns
Serial Data Rate			3	Mbps

DATA RATE CHARACTERIZATION AT 2.5V

OPERATING TEMPERATURE RANGE = -40° TO +85°C

PARAMETER	MIN	TYP	MAX	UNIT
Supply Voltage	2.25	2.5	2.75	V
Input High Voltage, V_{IH}	2.0			V
Input Low Voltage, V_{IL}			0.6	V
External Clock/Oscillator Frequency			16	MHz
External Clock Low/High Time	30			ns
Serial Data Rate			1	Mbps

DATA RATE CHARACTERIZATION AT 1.8V

OPERATING TEMPERATURE RANGE = -40° TO +85°C

PARAMETER	MIN	TYP	MAX	UNIT
Supply Voltage	1.62	1.8	1.98	V
Input High Voltage, V_{IH}	1.4			V
Input Low Voltage, V_{IL}			0.4	V
External Clock/Oscillator Frequency			12	MHz
External Clock Low/High Time	40			ns
Serial Data Rate			750	Kbps

The Product (or products) mentioned in this data sheet are no longer being manufactured and may not be ordered (OBS)

FIGURE 14. CLOCK TIMING

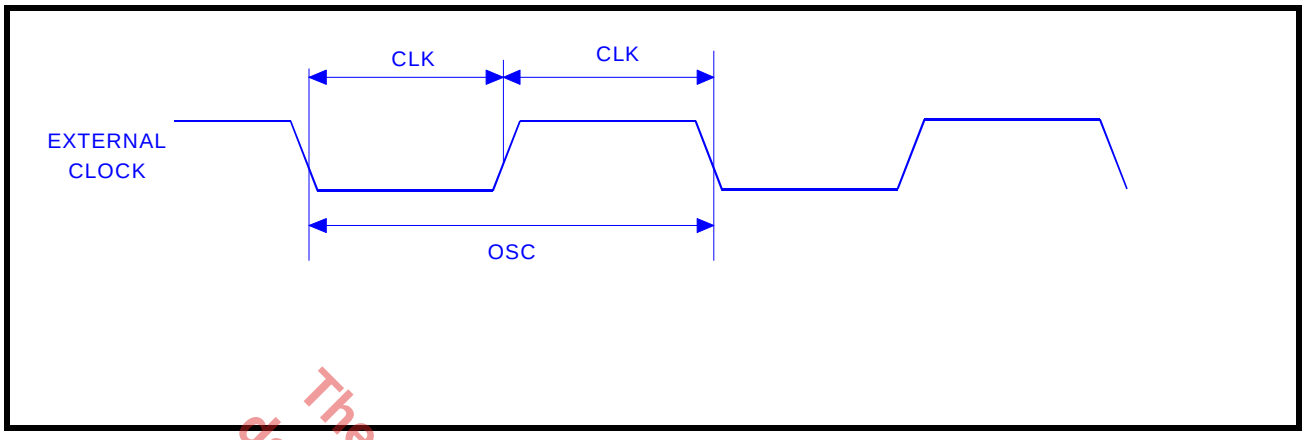

FIGURE 15. MODEM INPUT/OUTPUT TIMING

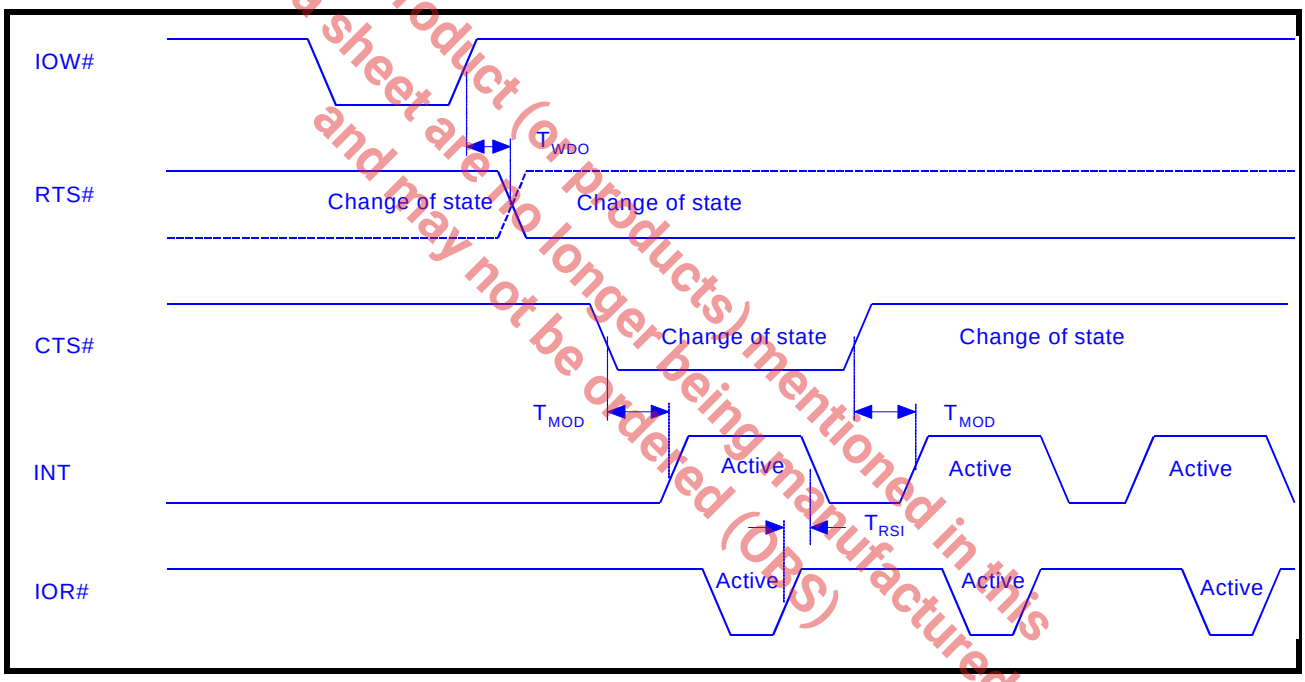

The product (or products) mentioned in this data sheet are no longer being manufactured and may not be ordered (OBS)

FIGURE 16. DATA BUS READ TIMING

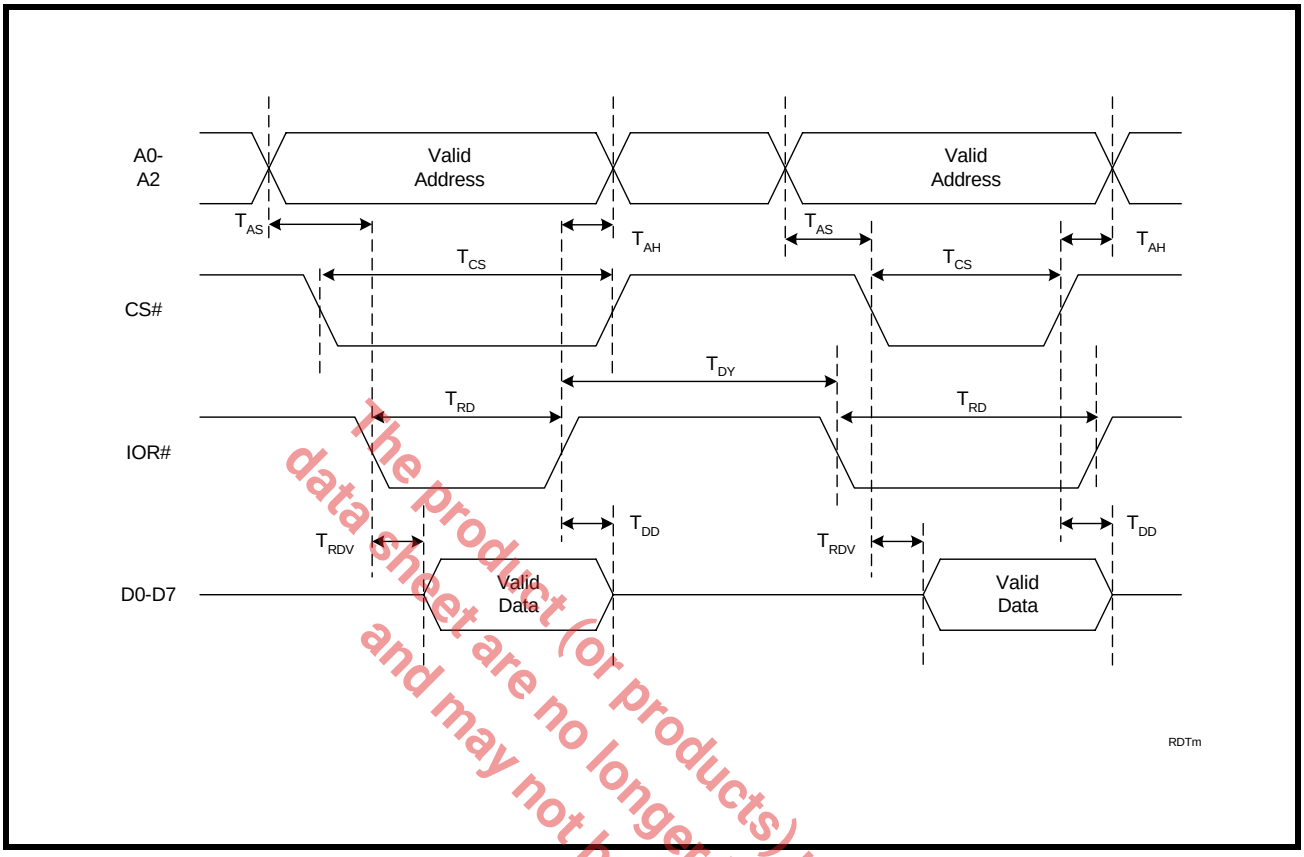

FIGURE 17. DATA BUS WRITE TIMING

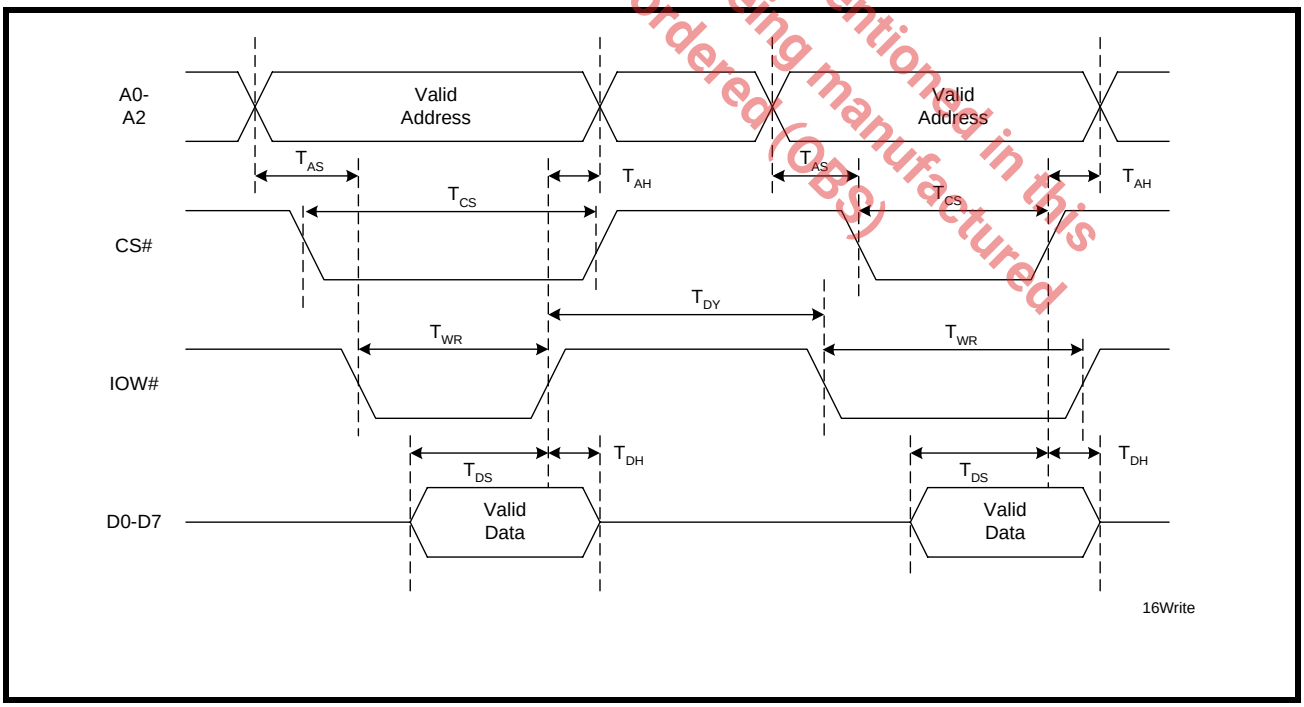

The product (or products) mentioned in this data sheet are no longer being manufactured and may not be ordered (OBS)

FIGURE 18. RECEIVE READY INTERRUPT TIMING [NON-FIFO MODE]

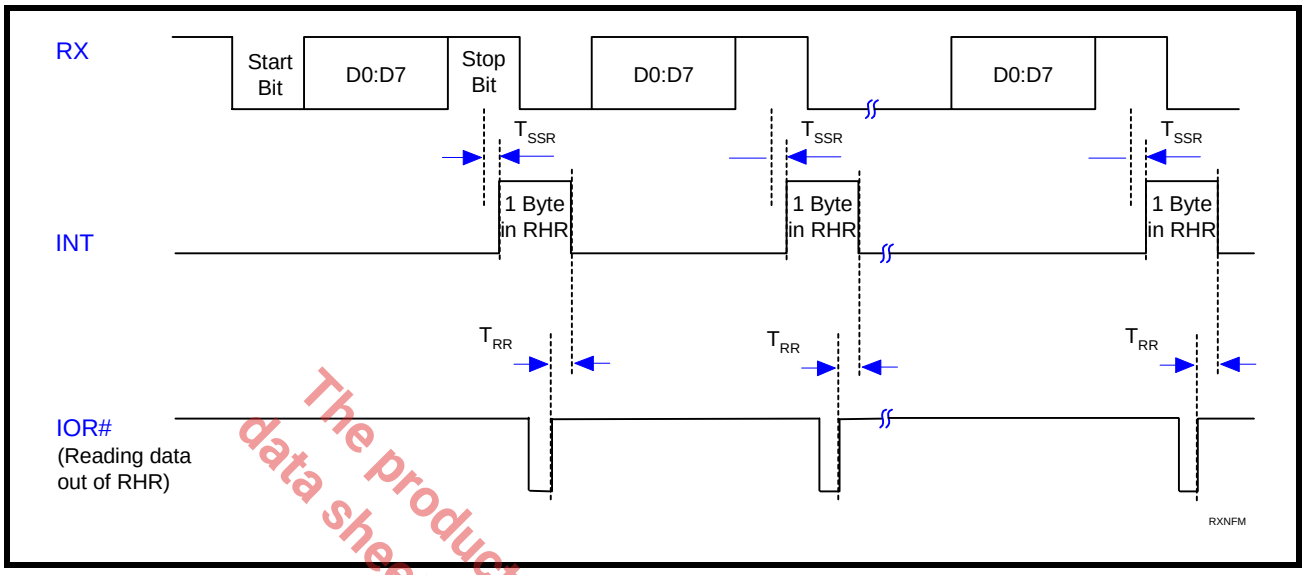

FIGURE 19. TRANSMIT READY INTERRUPT TIMING [NON-FIFO MODE]

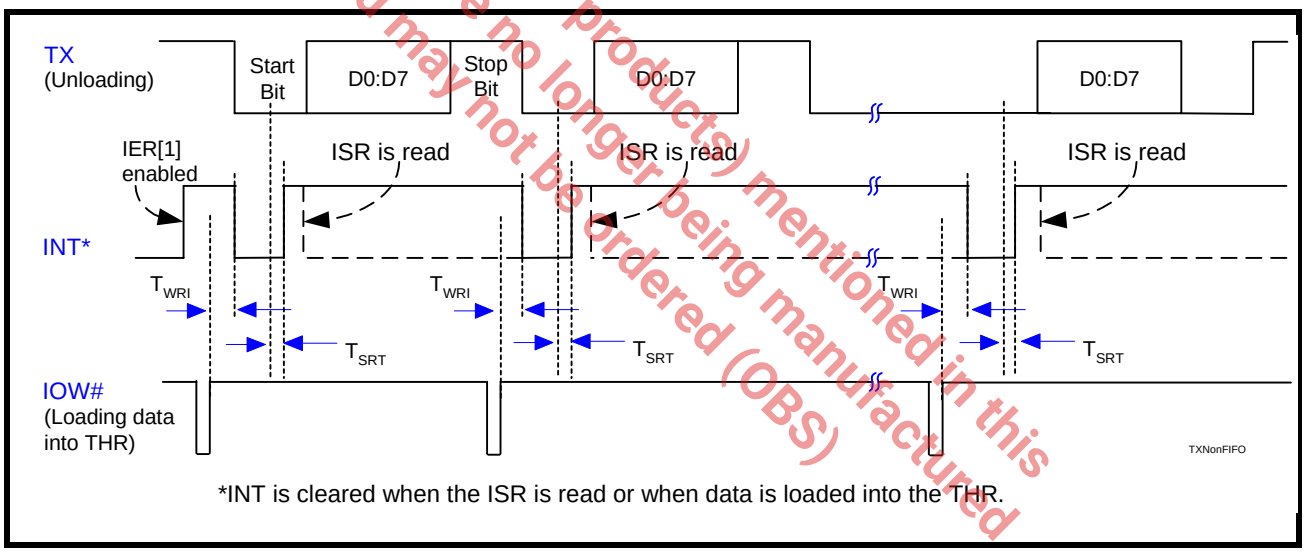

*INT is cleared when the ISR is read or when data is loaded into the THR.

The product (or products) mentioned in this data sheet are no longer being manufactured and may not be ordered (OBS)

FIGURE 20. RECEIVE READY INTERRUPT TIMING [FIFO MODE]

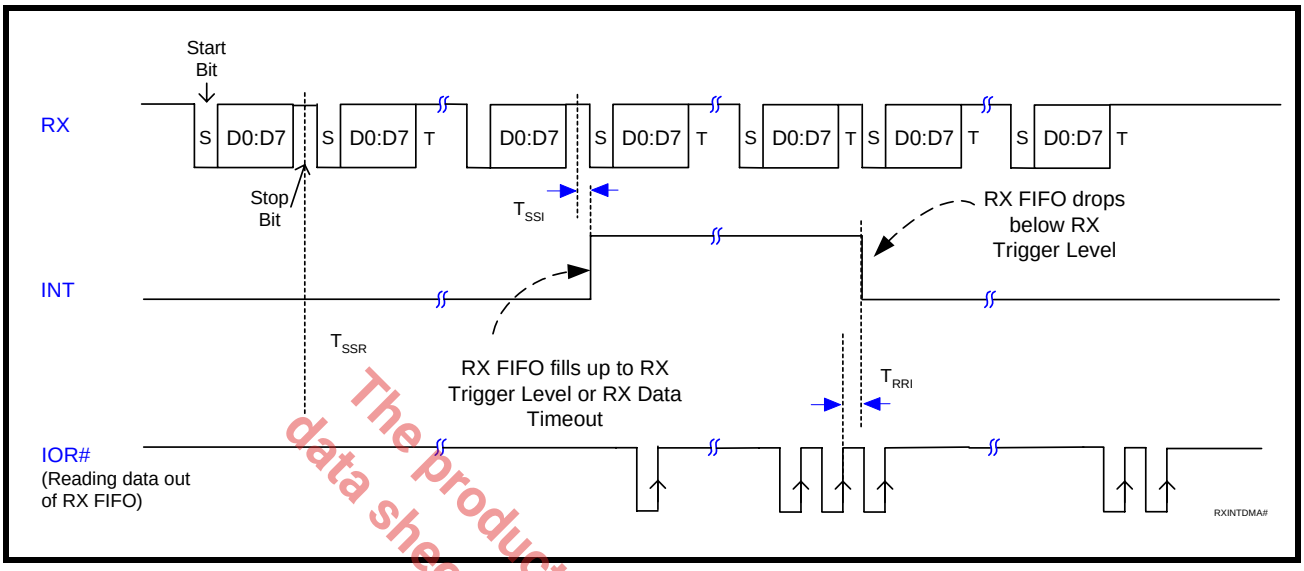

FIGURE 21. TRANSMIT READY INTERRUPT TIMING [FIFO MODE]

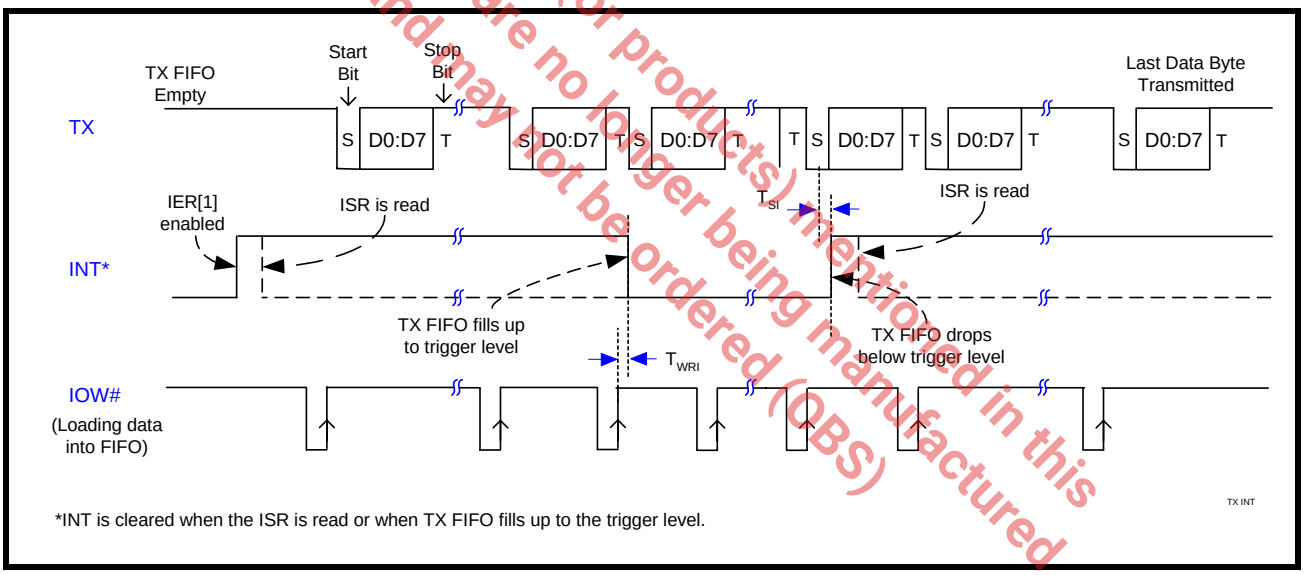

The product (or products) mentioned in this data sheet are no longer being manufactured and may not be ordered (OBS)

PACKAGE DIMENSIONS (32 PIN QFN - 5 X 5 X 0.9 mm)

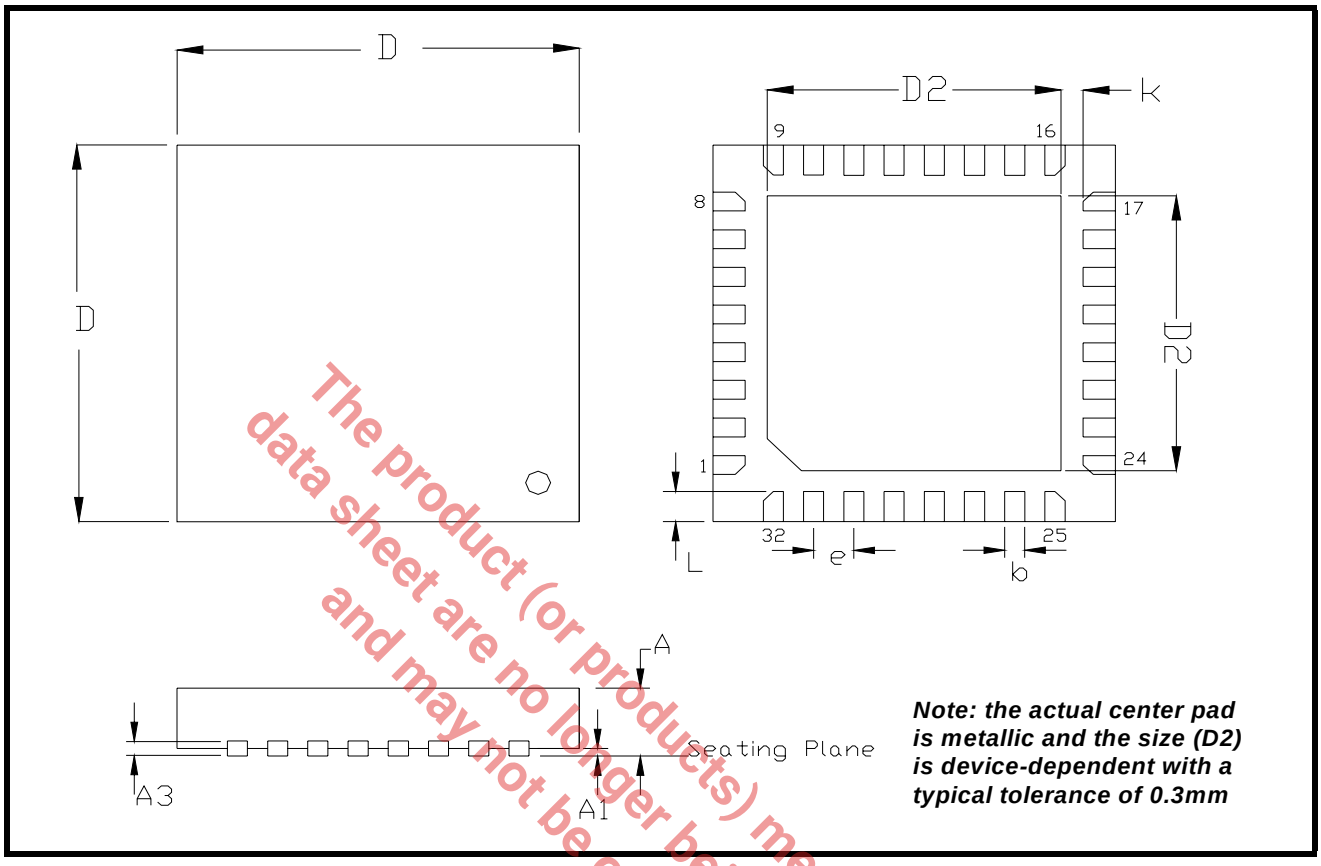

Note: the actual center pad is metallic and the size (D2) is device-dependent with a typical tolerance of 0.3mm

The product (or products) mentioned in this data sheet are no longer being manufactured and may not be ordered (OBS)

Note: The control dimension is in millimeter.

SYMBOL	INCHES		MILLIMETERS	
	MIN	MAX	MIN	MAX
A	0.031	0.039	0.80	1.00
A1	0.000	0.002	0.00	0.05
A3	0.006	0.010	0.15	0.25
D	0.193	0.201	4.90	5.10
D2	0.138	0.150	3.50	3.80
b	0.007	0.012	0.18	0.30
e	0.0197 BSC		0.50 BSC	
L	0.012	0.020	0.35	0.45
k	0.008	-	0.20	-

PACKAGE DIMENSIONS (24 PIN QFN - 4 X 4 X 0.9 mm)

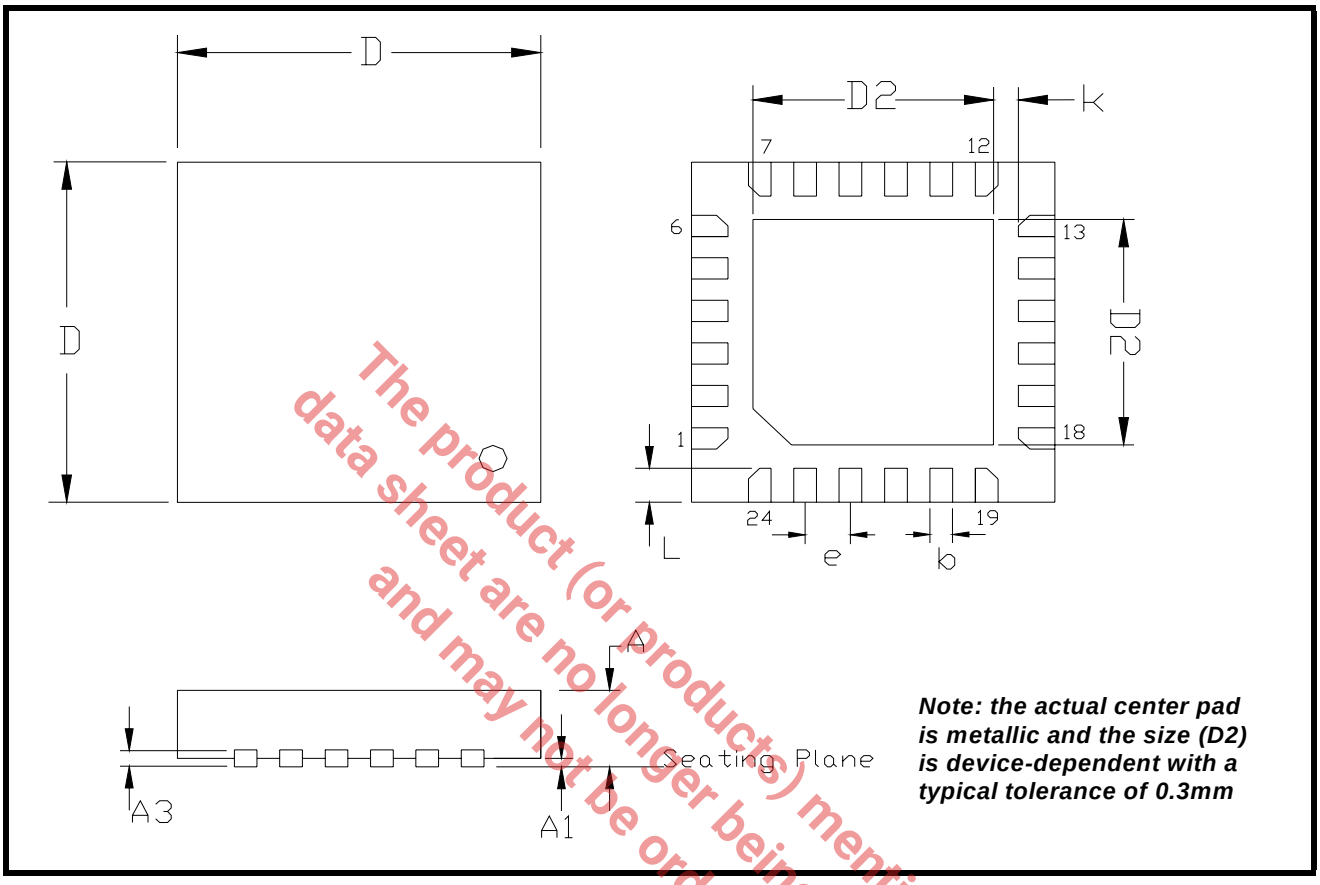

The product (or products) mentioned in this data sheet are no longer being manufactured and may not be ordered (OBS)

Note: The control dimension is in millimeter.

SYMBOL	INCHES		MILLIMETERS	
	MIN	MAX	MIN	MAX
A	0.031	0.039	0.80	1.00
A1	0.000	0.002	0.00	0.05
A3	0.006	0.010	0.15	0.25
D	0.154	0.161	3.90	4.10
D2	0.098	0.110	2.50	2.80
b	0.007	0.012	0.18	0.30
e	0.0197 BSC		0.50 BSC	
L	0.014	0.018	0.35	0.45
k	0.008	-	0.20	-

REVISION HISTORY

DATE	REVISION	DESCRIPTION
December 2005	P1.0.0	Preliminary Datasheet.
December 2005	1.0.0	Initial Datasheet Release. Updated 1.8V Electrical Characteristics.
May 2007	1.0.1	Updated QFN package dimensions drawing to show minimum "k" parameter.

The product (or products) mentioned in this data sheet are no longer being manufactured and may not be ordered (OBS)

NOTICE

EXAR Corporation reserves the right to make changes to the products contained in this publication in order to improve design, performance or reliability. EXAR Corporation assumes no responsibility for the use of any circuits described herein, conveys no license under any patent or other right, and makes no representation that the circuits are free of patent infringement. Charts and schedules contained here in are only for illustration purposes and may vary depending upon a user's specific application. While the information in this publication has been carefully checked; no responsibility, however, is assumed for inaccuracies.

EXAR Corporation does not recommend the use of any of its products in life support applications where the failure or malfunction of the product can reasonably be expected to cause failure of the life support system or to significantly affect its safety or effectiveness. Products are not authorized for use in such applications unless EXAR Corporation receives, in writing, assurances to its satisfaction that: (a) the risk of injury or damage has been minimized; (b) the user assumes all such risks; (c) potential liability of EXAR Corporation is adequately protected under the circumstances.

Copyright 2007 EXAR Corporation

Datasheet May 2007.

Send your UART technical inquiry with technical details to hotline: uarttechsupport@exar.com.

Reproduction, in part or whole, without the prior written consent of EXAR Corporation is prohibited.

TABLE OF CONTENTS

GENERAL DESCRIPTION 1
APPLICATIONS 1
FEATURES 1
FIGURE 1. BLOCK DIAGRAM 1
FIGURE 2. PACKAGE AND PIN OUT (24-PIN QFN PACKAGE) 2
ORDERING INFORMATION 2
PIN DESCRIPTIONS 3
1.0 PRODUCT DESCRIPTION 5
2.0 FUNCTIONAL DESCRIPTIONS 6
2.1 CPU INTERFACE 6
FIGURE 3. XR16L570 TYPICAL DATA BUS INTERCONNECTIONS 6
2.2 5-VOLT TOLERANT INPUTS 7
2.3 DEVICE HARDWARE RESET 7
2.4 DEVICE IDENTIFICATION AND REVISION 7
2.5 INTERNAL REGISTERS 7
2.6 DMA MODE 7
2.7 INT OUTPUT 7
TABLE 1: INT PIN OPERATION FOR TRANSMITTER 7
TABLE 2: INT PIN OPERATION FOR RECEIVER 7
2.8 CRYSTAL OR EXTERNAL CLOCK INPUT 8
FIGURE 4. TYPICAL CRYSTAL CONNECTIONS 8
FIGURE 5. EXTERNAL CLOCK CONNECTION FOR EXTENDED DATA RATE 8
2.9 PROGRAMMABLE BAUD RATE GENERATOR 9
FIGURE 6. BAUD RATE GENERATOR AND PRESCALER 9
TABLE 3: TYPICAL DATA RATES WITH A 14.7456 MHZ EXTERNAL CLOCK 10
2.10 TRANSMITTER 10
2.10.1 TRANSMIT HOLDING REGISTER (THR) - WRITE ONLY 10
2.10.2 TRANSMITTER OPERATION IN NON-FIFO MODE 10
FIGURE 7. TRANSMITTER OPERATION IN NON-FIFO MODE 11
2.10.3 TRANSMITTER OPERATION IN FIFO MODE 11
FIGURE 8. TRANSMITTER OPERATION IN FIFO AND FLOW CONTROL MODE 11
2.11 RECEIVER 11
2.11.1 RECEIVE HOLDING REGISTER (RHR) - READ-ONLY 12
FIGURE 9. RECEIVER OPERATION IN NON-FIFO MODE 12
FIGURE 10. RECEIVER OPERATION IN FIFO AND AUTO RTS FLOW CONTROL MODE 12
2.12 AUTO RTS (HARDWARE) FLOW CONTROL 13
2.13 AUTO RTS HYSTERESIS 13
2.14 AUTO CTS FLOW CONTROL 13
FIGURE 11. AUTO RTS AND CTS FLOW CONTROL OPERATION 14
2.15 AUTO XON/XOFF (SOFTWARE) FLOW CONTROL 15
TABLE 4: AUTO XON/XOFF (SOFTWARE) FLOW CONTROL 15
2.16 SPECIAL CHARACTER DETECT 15
2.17 INFRARED MODE 16
FIGURE 12. INFRARED TRANSMIT DATA ENCODING AND RECEIVE DATA DECODING 16
2.18 SLEEP MODE WITH WAKE-UP INTERRUPT AND POWER-SAVE FEATURE 17
2.18.1 SLEEP MODE 17
2.18.2 POWER-SAVE FEATURE 17
2.19 INTERNAL LOOPBACK 18
FIGURE 13. INTERNAL LOOP BACK 18
3.0 UART INTERNAL REGISTERS 19
TABLE 5: UART INTERNAL REGISTERS 19
TABLE 6: INTERNAL REGISTERS DESCRIPTION. SHADED BITS ARE ENABLED WHEN EFR BIT-4=1 20
4.0 INTERNAL REGISTER DESCRIPTIONS 21
4.1 RECEIVE HOLDING REGISTER (RHR) - READ- ONLY 21
4.2 TRANSMIT HOLDING REGISTER (THR) - WRITE-ONLY 21
4.3 BAUD RATE GENERATOR DIVISORS (DLL AND DLM) - READ/WRITE 21
4.4 INTERRUPT ENABLE REGISTER (IER) - READ/WRITE 21
4.4.1 IER VERSUS RECEIVE FIFO INTERRUPT MODE OPERATION 21
4.4.2 IER VERSUS RECEIVE/TRANSMIT FIFO POLLED MODE OPERATION 22

The product (s)/products mentioned in this Data sheet are no longer being manufactured and may/may not be ordered (OBS)

4.5 INTERRUPT STATUS REGISTER (ISR) - READ-ONLY 24
4.5.1 INTERRUPT GENERATION: 24
4.5.2 INTERRUPT CLEARING: 24
TABLE 7: INTERRUPT SOURCE AND PRIORITY LEVEL 25
4.6 FIFO CONTROL REGISTER (FCR) - WRITE-ONLY 25
TABLE 8: TRANSMIT AND RECEIVE FIFO TRIGGER LEVEL SELECTION 26
4.7 LINE CONTROL REGISTER (LCR) - READ/WRITE 26
TABLE 9: PARITY SELECTION 27
4.8 MODEM CONTROL REGISTER (MCR) OR GENERAL PURPOSE OUTPUTS CONTROL - READ/WRITE 28
4.9 LINE STATUS REGISTER (LSR) - READ ONLY 29
4.10 MODEM STATUS REGISTER (MSR) - READ ONLY 30
4.11 SCRATCHPAD REGISTER (SPR) - READ/WRITE 31
4.12 BAUD RATE GENERATOR REGISTERS (DLL AND DLM) - READ/WRITE 31
4.13 DEVICE IDENTIFICATION REGISTER (DVID) - READ ONLY 31
4.14 DEVICE REVISION REGISTER (DREV) - READ ONLY 31
4.15 ENHANCED FEATURE REGISTER (EFR) 32
TABLE 10: SOFTWARE FLOW CONTROL FUNCTIONS 32
4.16 SOFTWARE FLOW CONTROL REGISTERS (XOFF1, XOFF2, XON1, XON2) - WRITE ONLY 33
TABLE 11: UART RESET CONDITIONS FOR CHANNEL A AND B 34
ABSOLUTE MAXIMUM RATINGS 34
TYPICAL PACKAGE THERMAL RESISTANCE DATA (MARGIN OF ERROR: ± 15%) 34
DC ELECTRICAL CHARACTERISTICS 35
DC ELECTRICAL CHARACTERISTICS 35
AC ELECTRICAL CHARACTERISTICS 36
Unless otherwise noted: TA= -40o to +85oC, Vcc=2.97 - 5.5V, 70 pF load where applicable 36
AC ELECTRICAL CHARACTERISTICS 37
Unless otherwise noted: TA= -40o to +85oC, Vcc=1.62 - 2.75V, 70 pF load where applicable 37
DATA RATE CHARACTERIZATION AT 5V 38
Operating Temperature Range = -40o to +85oC 38
DATA RATE CHARACTERIZATION AT 3.3V 38
Operating Temperature Range = -40o to +85oC 38
DATA RATE CHARACTERIZATION AT 2.5V 38
Operating Temperature Range = -40o to +85oC 38
DATA RATE CHARACTERIZATION AT 1.8V 38
Operating Temperature Range = -40o to +85oC 38
FIGURE 14. CLOCK TIMING 39
FIGURE 15. MODEM INPUT/OUTPUT TIMING 39
FIGURE 16. DATA BUS READ TIMING 40
FIGURE 17. DATA BUS WRITE TIMING 40
FIGURE 18. RECEIVE READY INTERRUPT TIMING [NON-FIFO MODE] 41
FIGURE 19. TRANSMIT READY INTERRUPT TIMING [NON-FIFO MODE] 41
FIGURE 20. RECEIVE READY INTERRUPT TIMING [FIFO MODE] 42
FIGURE 21. TRANSMIT READY INTERRUPT TIMING [FIFO MODE] 42
PACKAGE DIMENSIONS (32 PIN QFN - 5 X 5 X 0.9 MM) 43
PACKAGE DIMENSIONS (24 PIN QFN - 4 X 4 X 0.9 MM) 44
REVISION HISTORY 45
TABLE OF CONTENTS I

The Product (of products) mentioned in this data sheet are no longer being manufactured and may not be ordered (OBS)