GENERAL DESCRIPTION

The XR20V2170[1] (V2170) is a high performance universal asynchronous receiver and transmitter (UART) with 64 byte TX and RX FIFOs, a selectable I²C/SPI slave interface and RS232 transceiver. The V2170 operates from 2.97 to 3.63 volts. The enhanced features in the V2170 include a programmable fractional baud rate generator, an 8X and 4X sampling rate that allows for a maximum baud rate of 250 Kbps at 3.3V. The standard features include 16 selectable TX and RX FIFO trigger levels, automatic hardware (RTS/CTS) and software (Xon/Xoff) flow control, and a complete modem interface. Onboard registers provide the user with operational status and data error flags. An internal loopback capability allows system diagnostics. The V2170 is available in the 40-pin QFN.

NOTE: 1 Covered by U.S. Patent #5,649,122

APPLICATIONS

- Portable Appliances
- Battery-Operated Devices
- Cellular Data Devices
- Factory Automation and Process Controls

FEATURES

- Selectable I²C/SPI Interface
- SPI clock frequency up to 18 MHz
- Meets true EIA/TIA-232-F Standards from +2.97V to +3.63V operation
- Data rate up to 250 Kbps
- 45us sleep mode exit (charge pump to full power)
- ESD protection for RS-232 I/O pins at
  - +/-15kV - Human Body Model
  - +/-15kV - IEC 61000-4-2, Air-Gap Discharge
  - +/- 8kV - IEC 61000-4-2, Contact Discharge
- Full-featured UART
  - Fractional Baud Rate Generator
  - Transmit and Receive FIFOs of 64 bytes
  - 16 Selectable TX and RX FIFO Trigger Levels
  - Automatic Hardware (RTS/CTS) Flow Control
  - Automatic Software (Xon/Xoff) Flow Control
  - Halt and Resume Transmission Control
  - Automatic sleep mode
  - General Purpose I/Os
  - Full modem interface
- 40-QFN packages

The product (or products) mentioned in this datasheet are no longer being manufactured and may not be ordered (OBS)

FIGURE 1. XR20V2170 BLOCK DIAGRAM

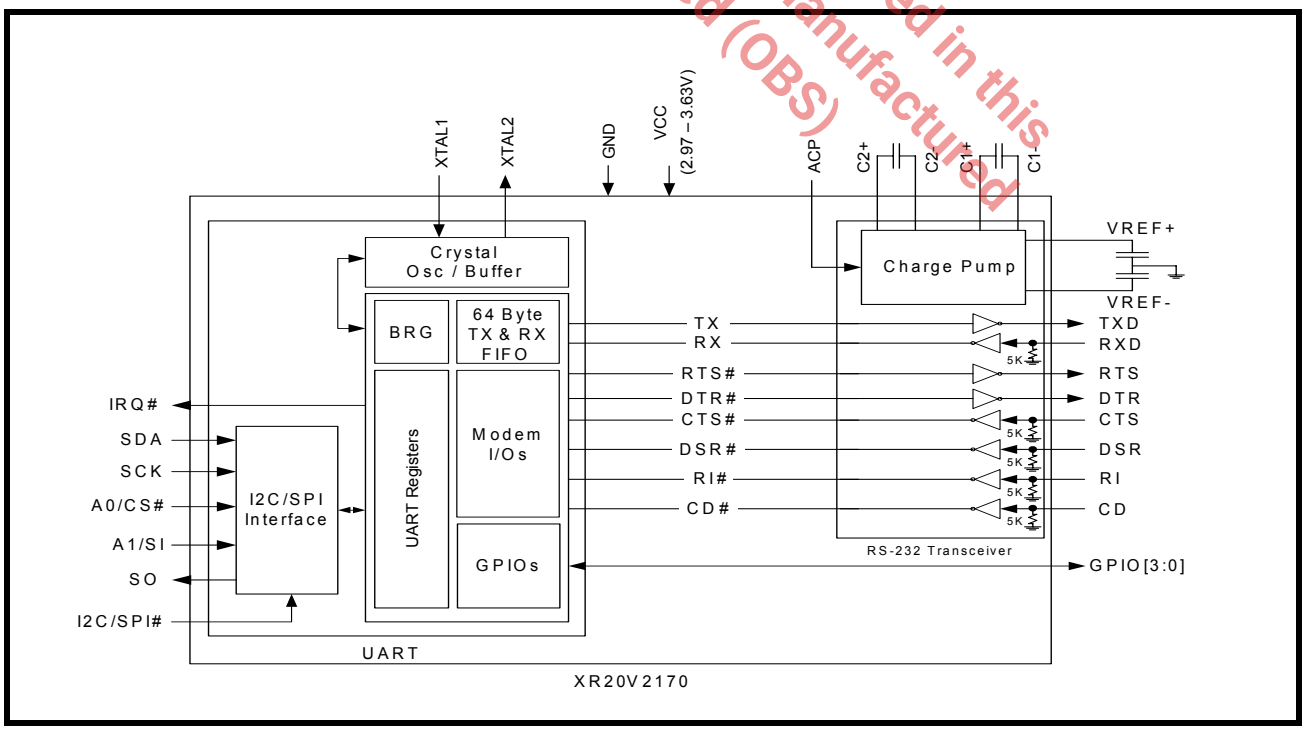

FIGURE 2. PIN OUT ASSIGNMENT

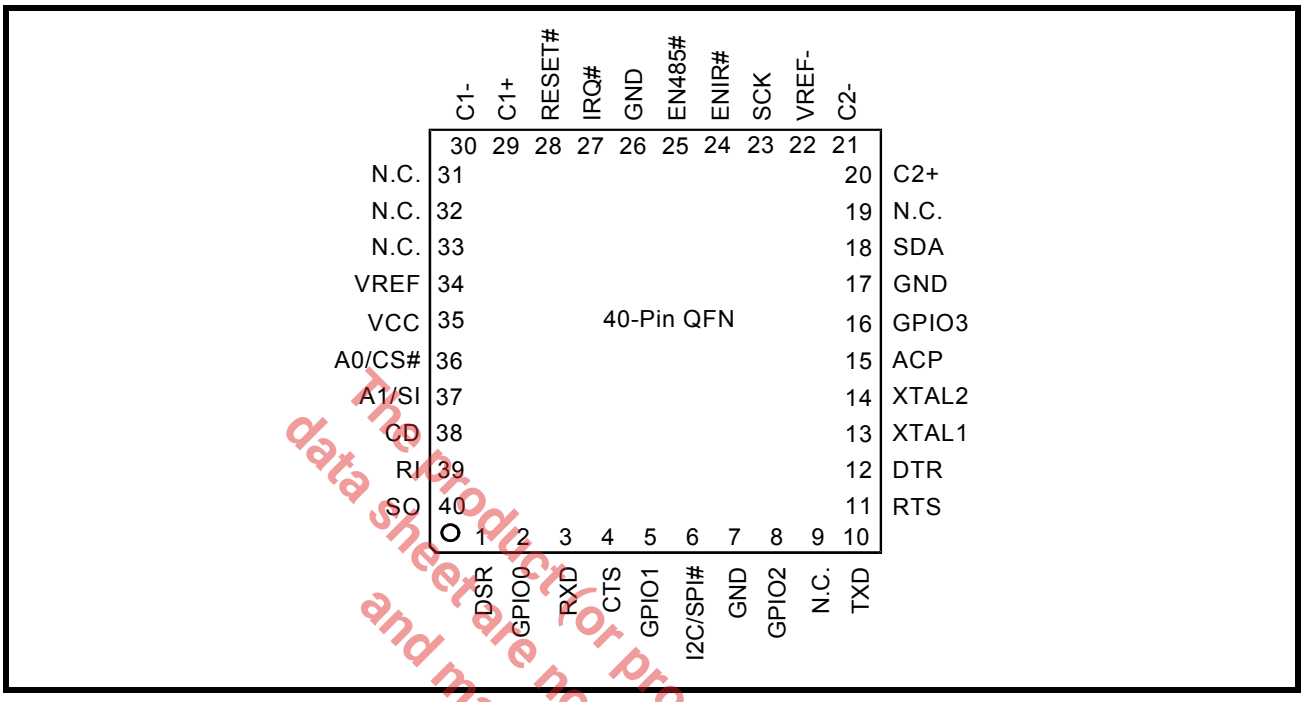

The product (or products) mentioned in this data sheet are no longer being manufactured and may not be ordered (OBS)

ORDERING INFORMATION

PART NUMBER	PACKAGE	OPERATING TEMPERATURE RANGE	DEVICE STATUS
XR20V2170IL40-F	40-pin QFN	-40°C to +85°C	Active
XR20V2170IL40TR-F	40-pin QFN	-40°C to +85°C	Active

NOTE: **TR = Tape and Reel, F = Green / RoHS**

PIN DESCRIPTIONS

Pin Description

NAME	40-QFN PIN #	TYPE	DESCRIPTION
I2C (SPI) INTERFACE			
GPIO0	2	I/O	General purpose I/O pin. If this pin is an input and is unused, it should be connected to VCC or GND. If this pin is an output and is unused, it should be left unconnected. See IODir register.
GPIO1	5	I/O	General purpose I/O pin. If this pin is an input and is unused, it should be connected to VCC or GND. If this pin is an output and is unused, it should be left unconnected. See IODir register.
I^2C/SPI#	6	I/O	I^2C-bus or SPI interface select. I^2C-bus interface is selected if this pin is HIGH. SPI interface is selected if this pin is LOW
GPIO2	8	I/O	General purpose I/O pin. If this pin is an input and is unused, it should be connected to VCC or GND. If this pin is an output and is unused, it should be left unconnected. See IODir register.
XTAL1	13	I	Crystal or external clock input.
XTAL2	14	O	Crystal or buffered clock output.
GPIO3	16	I/O	General purpose I/O pin. If this pin is an input and is unused, it should be connected to VCC or GND. If this pin is an output and is unused, it should be left unconnected. See IODir register.
SDA	18	O	I^2C-bus data input/output (open-drain). If SPI configuration is selected, then this pin is undefined and must be connected to VCC.
SCL	23	I	I^2C-bus or SPI serial input clock. When the I^2C-bus interface is selected, the serial clock idles HIGH. When the SPI interface is selected, the serial clock idles LOW.
IRQ#	27	OD	Interrupt output (open-drain, active LOW).
RESET#	28	I	Reset (active LOW) - A longer than 40 ns LOW pulse on this pin will reset the internal registers and all outputs. The UART transmitter output will be idle and the receiver input will be ignored.
VCC	35	Pwr	2.97V to 3.63V power supply.
A0 CS#	36	I	I^2C-bus device address select A0 or SPI chip select. If I^2C-bus configuration is selected, this pin along with the A1 pin allows user to change the device's base address. If SPI configuration is selected, this pin is the SPI chip select pin (Schmitt-trigger, active LOW).
A1 SI	37	I	I^2C-bus device address select A1 or SPI data input pin. If I^2C-bus onfiguration is selected, this pin along with A0 pin allows user to change the device's base address. If SPI configuration is selected, this pin is the SPI data input pin.
SO	40	O	SPI data output pin. If SPI configuration is selected then this pin is a three-state-able output pin. If I^2C-bus configuration is selected, this pin is undefined and must be left unconnected.

The product (or products) mentioned in this data sheet are no longer being manufactured and may not be ordered (OBS)

Pin Description

NAME	40-QFN PIN #	TYPE	DESCRIPTION
MODEM OR SERIAL I/O INTERFACE (EIA-232/RS-232 Voltage Levels)			
RXD	3	I	UART Receive Data. UART receive data input must idle LOW. This input has an internal pull-down resistor and can be left unconnected when not used.
TXD	10	O	UART Transmit Data. The TX signal will be LOW during reset or idle (no data).
RTS	11	O	UART Request-to-Send or general purpose output. This output must be asserted prior to using auto RTS flow control, see EFR[6], MCR[1] and IER[6].
DTR	12	I/O	UART Data-Terminal-Ready. If this pin is unused, it should be left unconnected.
DSR	1	I/O	UART Data-Set-Ready. This input has an internal pull-down resistor and can be left unconnected when not used.
CTS	4	I	UART Clear-to-Send or general purpose input. It can be used for auto CTS flow control, see EFR[7], MSR[4] and IER[7]. This input has an internal pull-down resistor and can be left unconnected when not used.
CD	38	I	UART Carrier-Detect or general purpose input. This input has an internal pull-down resistor and can be left unconnected when not used.
RI	39	I	UART Ring-Indicator or general purpose input. This input has an internal pull-down resistor and can be left unconnected when not used.
Ancillary signals (CMOS/TTL Voltage Levels)			
ACP	15	I	Autosleep for Charge Pump (active HIGH). When this pin is HIGH, the charge pump is shut off if the V2170 is already in partial sleep mode, i.e. the crystal oscillator is stopped.
C2+ C2-	20 21	-	Charge pump capacitors. As shown in Figure 1, a 0.1 uF capacitor should be placed between these 2 pins.
C1+ C1-	29 30	-	Charge pump capacitors. As shown in Figure 1, a 0.1 uF capacitor should be placed between these 2 pins.
VREF-	22	Pwr	-5.0V generated by the charge pump.
VREF+	34	Pwr	+5.0V generated by the charge pump.
GND	7, 17, 26	Pwr	Power supply common, ground.
-	PAD	Pwr	The center pad on the backside of the QFN packages is metallic and is not electrically connected to anything inside the device. It must be soldered on to the PCB and may be optionally connected to GND on the PCB. The thermal pad size on the PCB should be the approximate size of this center pad and should be solder mask defined. The solder mask opening should be at least 0.0025" inwards from the edge of the PCB thermal pad.
N.C.	9, 19, 24, 25, 31, 32, 33	-	No Connection.

NOTE: **Pin type: I=Input, O=Output, I/O= Input/output, OD=Output Open Drain.** *For CMOS/TTL Voltage levels, 'LOW' indicates a voltage in the range 0V to VIL and 'HIGH" indicates a voltage in the range VIH to VCC. For RS-232 input voltage levels, 'LOW' is any voltage < 1.5V and 'HIGH' is any voltage > 3V. For RS-232 output voltage levels, 'LOW' is any voltage < -5V and 'HIGH' is any voltage > 5V.*

The product (or product) mentioned in this data sheet are no longer being manufactured and may not be ordered (OBS)

1.0 PRODUCT DESCRIPTION

The XR20V2170 (V2170) integrates a selectable I^2C/SPI bus interface with an enhanced Universal Asynchronous Receiver and Transmitter (UART) and an RS-232 Transceiver. The configuration register set is 16550 UART compatible for control, status and data transfer. Additionally, the V2170 has 64-bytes of transmit and receive FIFOs, automatic RTS/CTS hardware flow control, automatic Xon/Xoff and special character software flow control, programmable transmit and receive FIFO trigger levels, programmable fractional baud rate generator with a prescaler of divide by 1 or 4, data rate up to 250 kbps, while meeting all EIA RS-232F specifications. Additionally, the V2170 includes the ACP pin with which the user can shut down the charge pump for the RS-232 drivers when the V2170 is already in sleep mode. The XR20V2170 is a 2.97V to 3.63V device. The V2170 is fabricated with an advanced CMOS process.

Enhanced Features

The V2170 UART provides a solution that supports 64 bytes of transmit and receive FIFO memory, instead of 16 bytes in the industry standard 16C550. The V2170 is designed to work with low supply voltage and high performance data communication systems, that require fast data processing time. Increased performance is realized in the V2170 by the larger transmit and receive FIFOs, FIFO trigger level control and automatic flow control mechanism. This allows the external processor to handle more networking tasks within a given time. For example, the 16C550 with a 16 byte FIFO, unloads 16 bytes of receive data in 1.53 ms (This example uses a character length of 11 bits, including start/stop bits at 115.2 Kbps). This means the external CPU will have to service the receive FIFO at 1.53 ms intervals. However with the 64 byte FIFO in the V2170, the data buffer will not require unloading/loading for 6.1 ms. This increases the service interval giving the external CPU additional time for other applications and reducing the overall UART interrupt servicing time. In addition, the programmable FIFO level trigger interrupt and automatic hardware/software flow control is uniquely provided for maximum data throughput performance especially when operating in a multi-channel system. The combination of the above greatly reduces the CPU's bandwidth requirement, increases performance, and reduces power consumption. Finally, since the V2170 includes an RS-232 transceiver and a full-modem interface, it can be connected to an RS-232 serial cable directly.

The product(s) mentioned in this data sheet are no longer being manufactured and may not be ordered (OBS)

Data Rate

The V2170 is capable of operation up to 250 Kbps data rate using the 16X, 8X or 4X internal sampling clock rate. The UART section can operate at much higher speeds, but the speed of the RS-232 transceiver is limited to 250Kbps beyond which the V2170 cannot comply with the EIA/TIA-232 electrical characteristics. The device can operate either with a crystal on pins XTAL1 and XTAL2, or external clock source on XTAL1 pin.

RS-232 Interface

The V2170 includes RS-232 drivers/receivers for the modem interface. This feature eliminates the need for an external RS-232 transceiver. The charge pump provides output voltages of +5V and -5V for its drivers over the 2.97V to 3.63V power supply voltage range. The serial outputs TXD swing between -5V (inactive) and +5V (active) RS-232 voltage levels. The serial inputs RXD are RS-232 receivers and can take any voltage swing from -15V to +15V. The receivers are always active, even in Sleep mode. The RS-232 drivers guarantee a data rate of 250 Kbps even when fully loaded with 3Kohm in parallel with 1000pF load.

All RS-232 drivers and receivers are protected to ±15kV using the Human Body Model ground combination, ±8kV using IEC 61000-4-2 Contact Discharge, and ±15kV using IEC 61000-4-2 Air-Gap Discharge. For more information, send an e-mail to uarttechsupport@exar.com.

2.0 FUNCTIONAL DESCRIPTIONS

2.1 CPU Interface

The V2170 can operate with either an I²C-bus interface or an SPI interface. The CPU interface is selected via the I2C/SPI# input pin. The V2170 can operate with either an I²C-bus interface or an SPI interface. The CPU interface is selected via the I2C/SPI# input pin.

2.1.1 I²C-bus Interface

The I²C-bus interface is compliant with the Standard-mode and Fast-mode I²C-bus specifications. The I²C-bus interface consists of two lines: serial data (SDA) and serial clock (SCL). In the Standard-mode, the serial clock and serial data can go up to 100 kbps and in the Fast-mode, the serial clock and serial data can go up to 400 kbps. The first byte sent by an I²C-bus master contains a start bit (SDA transition from HIGH to LOW when SCL is HIGH), 7-bit slave address and whether it is a read or write transaction. The next byte is the sub-address that contains the address of the register to access. The V2170 responds to each write with an acknowledge (SDA driven LOW by V2170 for one clock cycle when SCL is HIGH). If the TX FIFO is full, the V2170 will respond with a negative acknowledge (SDA driven HIGH by V2170 for one clock cycle when SCL is HIGH) when the CPU tries to write to the TX FIFO. The last byte sent by an I²C-bus master contains a stop bit (SDA transition from LOW to HIGH when SCL is HIGH). See **Figures 3 - 5** below. For complete details, see the I²C-bus specifications.

The product (or products) mentioned in this data sheet are no longer being manufactured and may not be ordered (OBS)

FIGURE 3. I²C START AND STOP CONDITIONS

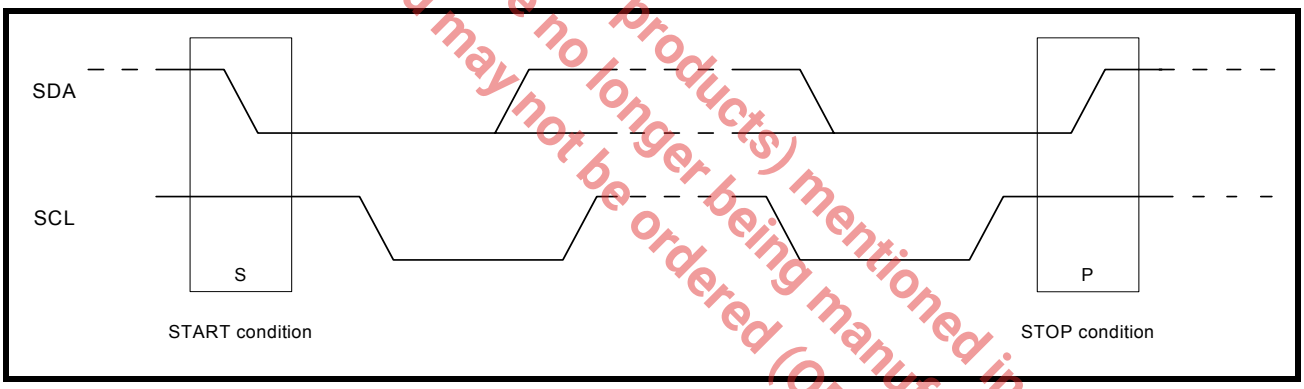

FIGURE 4. MASTER WRITES TO SLAVE (V2170)

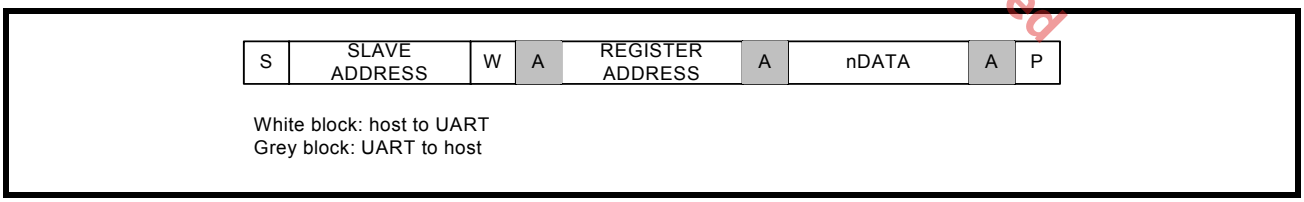

FIGURE 5. MASTER READS FROM SLAVE (V2170)

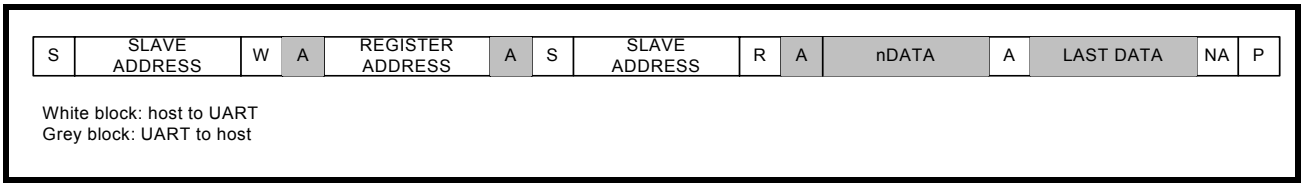

2.2 I²C-bus Addressing

There could be many devices on the I²C-bus. To distinguish itself from the other devices on the I²C-bus, there are eight possible slave addresses that can be selected for the V2170 using the A1 and A0 address lines. Table 1 below shows the different addresses that can be selected. Note that there are two different ways to select each I2C address.

TABLE 1: XR20V2170 I²C ADDRESS MAP

A1	A0	I²C ADDRESS
VCC	VCC	0x60 (0110 000X)
VCC	GND	0x62 (0110 001X)
VCC	SCL	0x64 (0110 010X)
VCC	SDA	0x66 (0110 011X)
GND	VCC	0x68 (0110 100X)
GND	GND	0x6A (0110 101X)
GND	SCL	0x6C (0110 110X)
GND	SDA	0x6E (0110 111X)
SCL	VCC	0x60 (0110 000X)
SCL	GND	0x62 (0110 001X)
SCL	SCL	0x64 (0110 010X)
SCL	SDA	0x66 (0110 011X)
SDA	VCC	0x68 (0110 100X)
SDA	GND	0x6A (0110 101X)
SDA	SCL	0x6C (0110 110X)
SDA	SDA	0x6E (0110 111X)

The product (or products) mentioned in this data sheet are no longer being manufactured and may not be ordered (OBS)

An I²C sub-address is sent by the I²C master following the slave address. The sub-address contains the UART register address being accessed. A read or write transaction is determined by bit-0 of the slave address. If bit-0 is'0', then it is a write transaction. If bit-0 is '1', then it is a read transaction. Table 2 below lists the functions of the bits in the I²C sub-address.

TABLE 2: I²C SUB-ADDRESS

BIT	FUNCTION
7	Reserved
6:3	UART Internal Register Address A3:A0
2:1	UART Channel Select '00' = UART Channel A, other values are reserved
0	Reserved

After the last read or write transaction, the I²C-bus master will set the SCL signal back to its idle state (HIGH).

2.2.1 SPI Bus Interface

The SPI interface consists of four lines: serial clock (SCL), chip select (CS#), slave output (SO) and slave input (SI). The serial clock, slave output and slave input can be as fast as 18 MHz at 3.3V. To access the device in the SPI mode, the CS# signal for the V2170 is asserted by the SPI master, then the SPI master starts toggling the SCL signal with the appropriate transaction information. The first byte sent by the SPI master includes whether it is a read or write transaction and the UART register being accessed. See Table 3 below.

TABLE 3: SPI FIRST BYTE FORMAT

BIT	FUNCTION
7	Read/Write# Logic 1 = Read Logic 0 = Write
6:3	UART Internal Register Address A3:A0
2:1	UART Channel Select '00' = UART Channel A, other values are reserved
0	Reserved

After the last read or write transaction, the SPI master will set the SCL signal back to its idle state (LOW).

The product (or products) mentioned in this data sheet are no longer being manufactured and may not be ordered (OBS).

2.3 Device Reset

The RESET# input resets the internal registers and the serial interface outputs in the UART to its default state (see Table 16). An active low pulse of longer than 40 ns duration will be required to activate the reset function in the device.

2.4 Internal Registers

The V2170 has a set of enhanced registers for control, monitoring and data loading and unloading. The configuration register set is compatible to the industry standard ST16C550. These registers function as data holding registers (THR/RHR), interrupt status and control registers (ISR/IER), a FIFO control register (FCR), receive line status and control registers (LSR/LCR), modem status and control registers (MSR/MCR), programmable data rate (clock) divisor registers (DLL/DLM/DLD), and a user accessible Scratchpad Register (SPR).

Beyond the general 16C550 features and capabilities, the V2170 offers enhanced feature registers (EFR, Xon/Xoff 1, Xon/Xoff 2, TCR, TLR, TXLVL, RXLVL, IODir, IOState, IOIntEna, IOControl, EFCR and DLD) that provide automatic RTS and CTS hardware flow control, Xon/Xoff software flow control, TX and RX FIFO level counters, and programmable FIFO trigger level control. All the register functions are discussed in full detail later in "Section 3.0, UART Internal Registers" on page 19.

2.5 IRQ# Output

The IRQ# interrupt output changes according to the operating mode and enhanced features setup. Table 4 and 5 summarize the operating behavior for the transmitter and receiver.

TABLE 4: IRQ# PIN OPERATION FOR TRANSMITTER

	Auto RS485 Mode	FCR BIT-0 = 0 (FIFO DISABLED)	FCR BIT-0 = 1 (FIFO ENABLED)
IRQ# Pin	NO	HIGH = a byte in THR LOW = THR empty	HIGH = FIFO above trigger level LOW = FIFO below trigger level or FIFO empty
IRQ# Pin	YES	HIGH = a byte in THR LOW = transmitter empty	HIGH = FIFO above trigger level LOW = FIFO below trigger level or transmitter empty

TABLE 5: IRQ# PIN OPERATION FOR RECEIVER

	FCR BIT-0 = 0 (FIFO DISABLED)	FCR BIT-0 = 1 (FIFO ENABLED)
IRQ# Pin	HIGH = no data LOW = 1 byte	HIGH = FIFO below trigger level LOW = FIFO above trigger level

2.6 Crystal Oscillator or External Clock Input

The V2170 includes an on-chip oscillator (XTAL1 and XTAL2) to produce a clock for both UART sections in the device. The crystal oscillator provides a system clock to the Baud Rate Generators (BRG) section found in each of the UART. XTAL1 is the input to the oscillator or external clock buffer input with XTAL2 pin being the output. Please note that the input XTAL1 is not 5V tolerant and so the maximum at the pin should be VCC. For programming details, see "Section 2.7, Programmable Baud Rate Generator with Fractional Divisor" on page 9."

The product (or products) mentioned in this data sheet are no longer being manufactured and may not be ordered (OBS)

FIGURE 6. TYPICAL OSCILLATOR CONNECTIONS

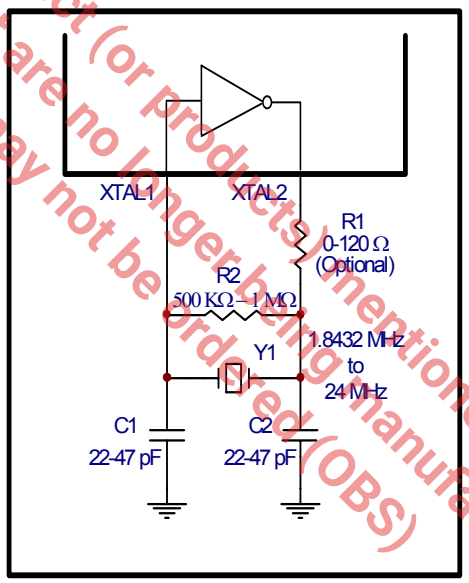

The on-chip oscillator is designed to use an industry standard microprocessor crystal (parallel resonant, fundamental frequency with 10-22 pF capacitance load, ESR of 20-120 ohms and 100 ppm frequency tolerance) connected externally between the XTAL1 and XTAL2 pins (see Figure 6). The programmable Baud Rate Generator is capable of operating with a crystal oscillator frequency of up to 24 MHz. Although the V2170 can accept an external clock of up to 64MHz, the maximum data rate supported by the RS-232 drivers is 250Kbps. For further reading on the oscillator circuit please see the Application Note DAN108 on the EXAR web site at http://www.exar.com.

2.7 Programmable Baud Rate Generator with Fractional Divisor

Each UART has its own Baud Rate Generator (BRG) with a prescaler for the transmitter and receiver. The prescaler is controlled by a software bit in the MCR register. The MCR register bit-7 sets the prescaler to divide the input crystal or external clock by 1 or 4. The output of the prescaler clocks to the BRG. The BRG further divides this clock by a programmable divisor between 1 and (2^{16} - 0.0625) in increments of 0.0625 (1/16) to obtain a 16X, 8X or 4X sampling clock of the serial data rate. The sampling clock is used by the transmitter for data bit shifting and receiver for data sampling. The BRG divisor (DLL, DLM and DLD registers) defaults to the

value of '1' (DLL = 0x01, DLM = 0x00 and DLD = 0x00) upon power-up. Therefore, the BRG must be programmed during initialization to the operating data rate. The DLL and DLM registers provide the integer part of the divisor and the DLD register provides the fractional part of the dvisior. The four lower bits of the DLD are used to select a value from 0 (for setting 0000) to 0.9375 or 15/16 (for setting 1111). Programming the Baud Rate Generator Registers DLL, DLM and DLD provides the capability for selecting the operating data rate. **Table 6** shows the standard data rates available with a 24MHz crystal or external clock at 16X clock rate. If the pre-scaler is used (MCR bit-7 = 1), the output data rate will be 4 times less than that shown in **Table 6**. At 8X sampling rate, these data rates would double and at 4X sampling rate, these data rates would quadruple. Also, when using 8X sampling mode, the bit time will have a jitter of ± 1/16 whenever the DLD is non-zero and is an odd number. When using 4X sampling mode, the bit time will have a jitter of ± 1/8 whenever DLD is non-zero, odd and not a multiple of 4. When using a non-standard data rate crystal or external clock, the divisor value can be calculated with the following equation(s):

Required Divisor (decimal)=(XTAL1 clock frequency / prescaler) /(serial data rate x 16), with 16X mode, **DLD[5:4]='00'**
Required Divisor (decimal)= (XTAL1 clock frequency / prescaler / (serial data rate x 8), with 8X mode, **DLD[5:4] = '01'**
Required Divisor (decimal)= (XTAL1 clock frequency / prescaler / (serial data rate x 4), with 4X mode, **DLD[5:4] = '10'**

The closest divisor that is obtainable in the V2170 can be calculated using the following formula:

ROUND((Required Divisor - TRUNC(Required Divisor))*16)/16 + TRUNC(Required Divisor), where

DLM = TRUNC(Required Divisor) >> 8
DLL = TRUNC(Required Divisor) & 0xFF
DLD = ROUND((Required Divisor-TRUNC(Required Divisor))*16)

In the formulas above, please note that:

TRUNC (N) = Integer Part of N. For example, TRUNC (5.6) = 5.

ROUND (N) = N rounded towards the closest integer. For example, ROUND (7.3) = 7 and ROUND (9.9) = 10.

A >> B indicates right shifting the value 'A' by 'B' number of bits. For example, 0x78A3 >> 8 = 0x0078.

The product(s) mentioned in this data sheet are no longer being manufactured and may not be ordered (OBS)

FIGURE 7. BAUD RATE GENERATOR

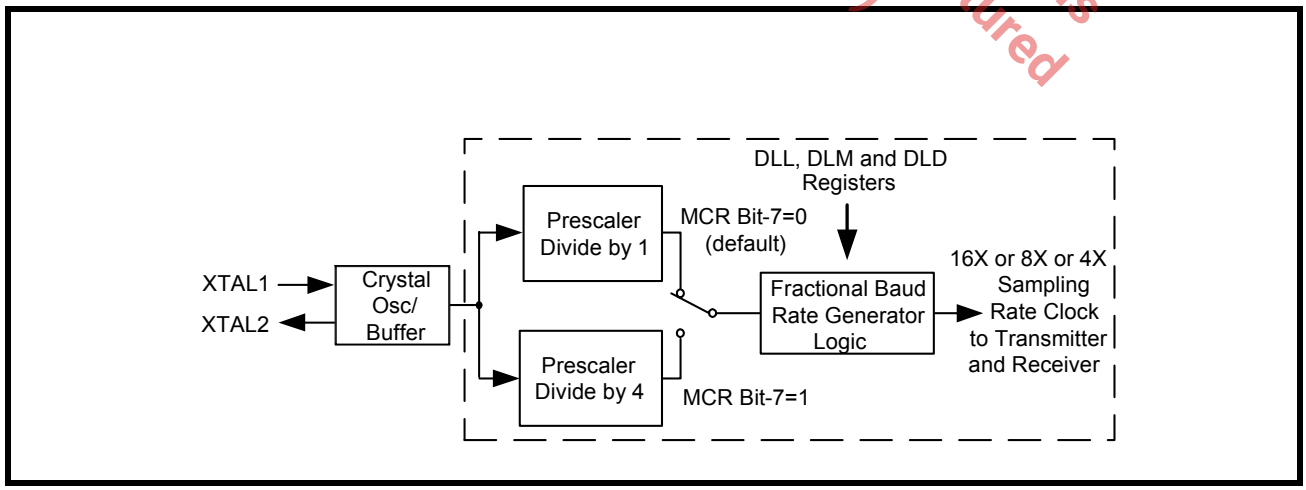

TABLE 6: TYPICAL DATA RATES WITH A 24 MHZ CRYSTAL OR EXTERNAL CLOCK AT 16X SAMPLING

Required Output Data Rate	DIVISOR FOR 16x Clock (Decimal)	DIVISOR OBTAINABLE IN V2170	DLM PROGRAM VALUE (HEX)	DLL PROGRAM VALUE (HEX)	DLD PROGRAM VALUE (HEX)	DATA ERROR RATE (%)
400	3750	3750	E	A6	0	0
2400	625	625	2	71	0	0
4800	312.5	312 8/16	1	38	8	0
9600	156.25	156 4/16	0	9C	4	0
10000	150	150	0	96	0	0
19200	78.125	78 2/16	0	4E	2	0
25000	60	60	0	3C	0	0
28800	52.0833	52 1/16	0	34	1	0.04
38400	39.0625	39 1/16	0	27	1	0
50000	30	30	0	1E	0	0
57600	26.0417	26 1/16	0	1A	1	0.08
75000	20	20	0	14	0	0
100000	15	15	0	F	0	0
115200	13.0208	13	0	D	0	0.16
153600	9.7656	9 12/16	0	9	C	0.16
200000	7.5	7 8/16	0	7	8	0
225000	6.6667	6 11/16	0	6	B	0.31
230400	6.5104	6 8/16	0	6	8	0.16
250000	6	6	0	6	0	0

The product (or products) mentioned in this datasheet are no longer being manufactured and may not be ordered (OBS)

2.8 Transmitter

The transmitter section comprises of an 8-bit Transmit Shift Register (TSR) and 64 bytes of FIFO which includes a byte-wide Transmit Holding Register (THR). TSR shifts out every data bit with the 16X/8X/4X internal clock. A bit time is 16 (8 if 8X or 4 if 4X) clock periods (see DLD[5:4]). The transmitter sends the start-bit followed by the number of data bits, inserts the proper parity-bit if enabled, and adds the stop-bit(s). The status of the FIFO and TSR are reported in the Line Status Register (LSR[6:5]).

2.8.1 Transmit Holding Register (THR) - Write Only

The transmit holding register is an 8-bit register providing a data interface to the host processor. The host writes transmit data byte to the THR to be converted into a serial data stream including start-bit, data bits, parity-bit and stop-bit(s). The least-significant-bit (Bit-0) becomes first data bit to go out. The THR is the input register to the transmit FIFO of 64 bytes when FIFO operation is enabled by FCR bit-0. Every time a write operation is made to the THR, the FIFO data pointer is automatically bumped to the next sequential data location.

2.8.2 Transmitter Operation in non-FIFO Mode

The host loads transmit data to THR one character at a time. The THR empty flag (LSR bit-5) is set when the data byte is transferred to TSR. THR flag can generate a transmit empty interrupt (ISR bit-1) when it is enabled by IER bit-1. The TSR flag (LSR bit-6) is set when TSR becomes completely empty.

FIGURE 8. TRANSMITTER OPERATION IN NON-FIFO MODE

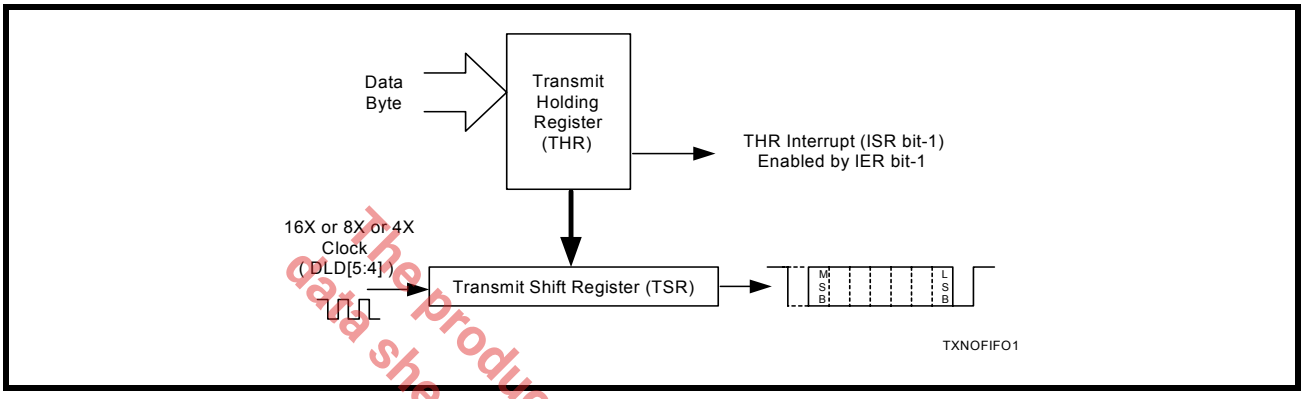

The product(s) mentioned in this data sheet are no longer being manufactured and may not be ordered (OBS)

2.8.3 Transmitter Operation in FIFO Mode

The host may fill the transmit FIFO with up to 64 bytes of transmit data. The THR empty flag (LSR bit-5) is set whenever the FIFO is empty. The THR empty flag can generate a transmit empty interrupt (ISR bit-1) when the amount of data in the FIFO falls below its programmed trigger level. The transmit empty interrupt is enabled by IER bit-1. The TSR flag (LSR bit-6) is set when TSR/FIFO becomes empty.

FIGURE 9. TRANSMITTER OPERATION IN FIFO AND FLOW CONTROL MODE

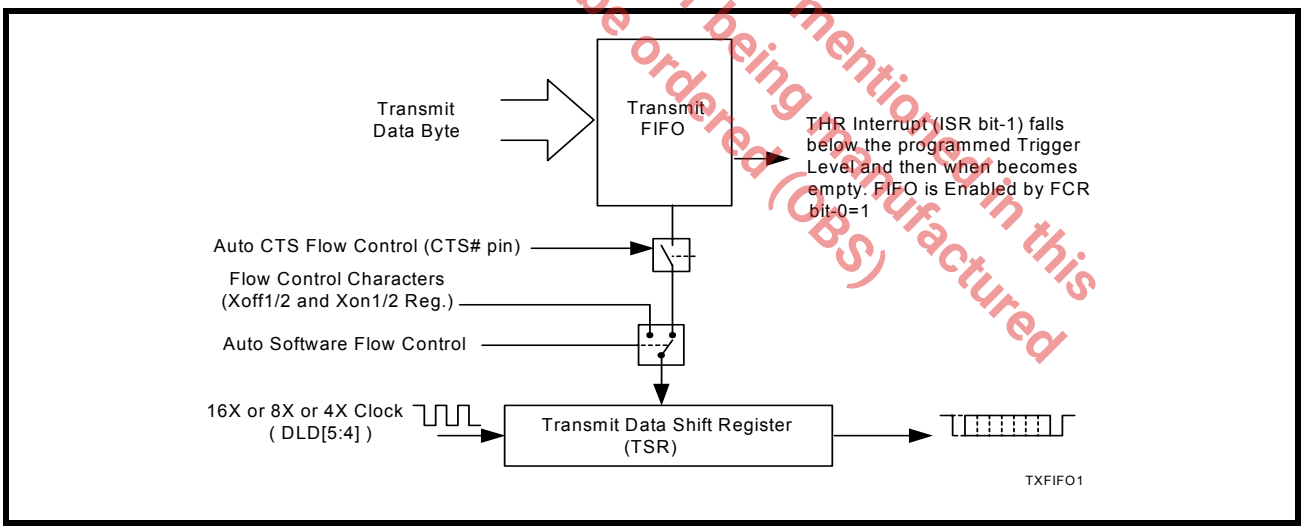

2.9 Receiver

The receiver section contains an 8-bit Receive Shift Register (RSR) and 64 bytes of FIFO which includes a byte-wide Receive Holding Register (RHR). The RSR uses the 16X/8X/4X clock (DLD [5:4]) for timing. It verifies and validates every bit on the incoming character in the middle of each data bit. On the falling edge of a start or false start bit, an internal receiver counter starts counting at the 16X/8X/4X clock rate. After 8 clocks (or 4 if 8X or 2 if 4X) the start bit period should be at the center of the start bit. At this time the start bit is sampled and if it is still a logic 0 it is validated. Evaluating the start bit in this manner prevents the receiver from assembling a false character. The rest of the data bits and stop bits are sampled and validated in this same manner to prevent false framing. If there were any error(s), they are reported in the LSR register bits 2-4. Upon unloading the receive data byte from RHR, the receive FIFO pointer is bumped and the error tags are immediately updated to reflect the status of the data byte in RHR register. RHR can generate a receive data ready interrupt upon receiving a character or delay until it reaches the FIFO trigger level. Furthermore, data delivery to the host is guaranteed by a receive data ready time-out interrupt when data is not received for 4 word lengths as defined by LCR[1:0] plus 12 bits time. This is equivalent to 3.7-4.6 character times. The RHR interrupt is enabled by IER bit-0.

2.9.1 Receive Holding Register (RHR) - Read-Only

The Receive Holding Register is an 8-bit register that holds a receive data byte from the Receive Shift Register. It provides the receive data interface to the host processor. The RHR register is part of the receive FIFO of 64 bytes by 11-bits wide, the 3 extra bits are for the 3 error tags to be reported in LSR register. When the FIFO is enabled by FCR bit-0, the RHR contains the first data character received by the FIFO. After the RHR is read, the next character byte is loaded into the RHR and the errors associated with the current data byte are immediately updated in the LSR bits 2-4.

The product(s) mentioned in this data sheet are no longer being manufactured and may not be ordered (OBS)

FIGURE 10. RECEIVER OPERATION IN NON-FIFO MODE

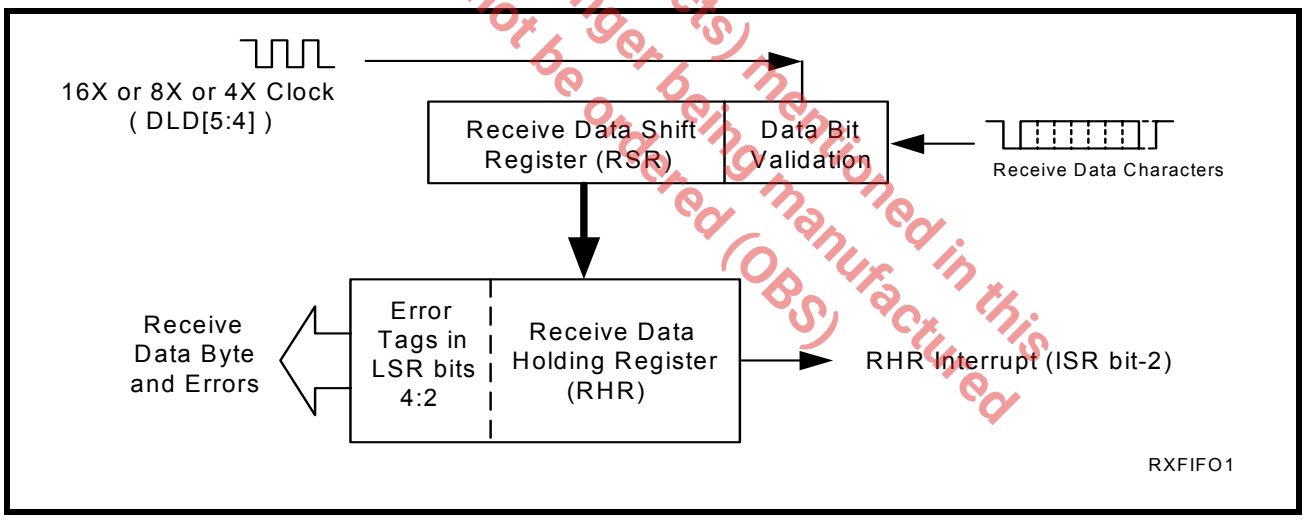

FIGURE 11. RECEIVER OPERATION IN FIFO AND AUTO RTS FLOW CONTROL MODE

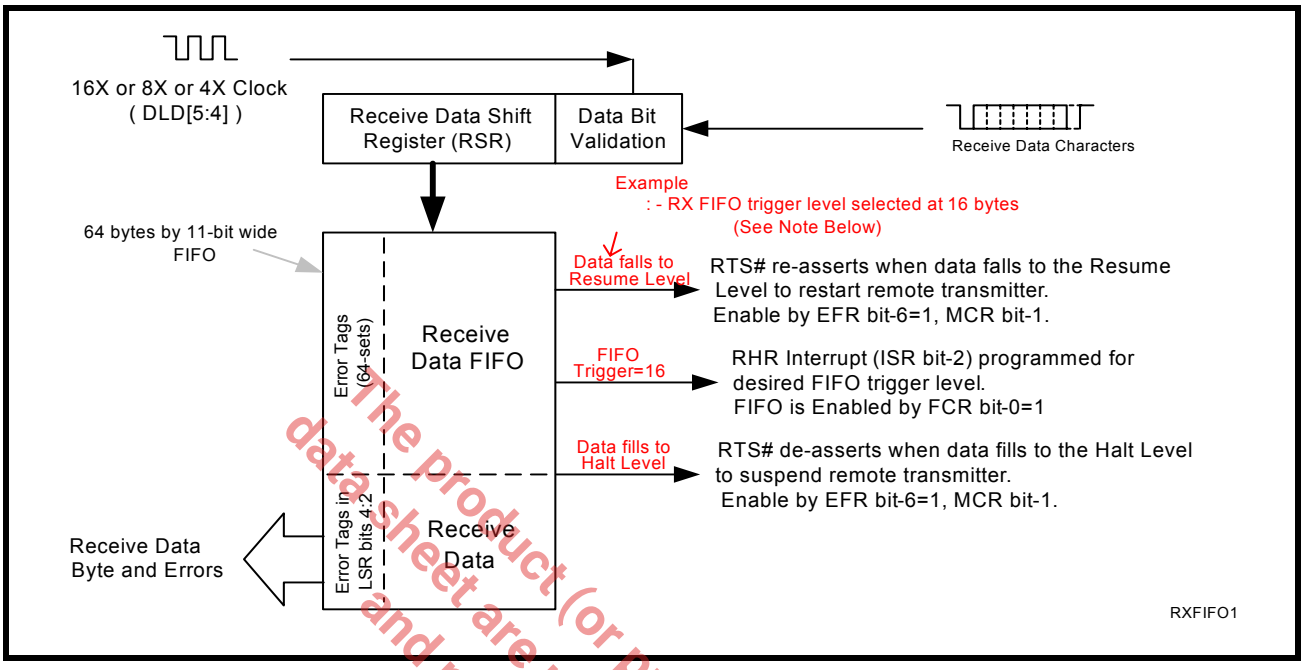

2.10 Auto RTS (Hardware) Flow Control

Automatic RTS hardware flow control is used to prevent data overrun to the local receiver FIFO. The RTS# output is used to request remote unit to suspend/resume data transmission. The auto RTS flow control features is enabled to fit specific application requirement (see Figure 12):

- Enable auto RTS flow control using EFR bit-6.
- The auto RTS function must be started by asserting RTS# output pin (MCR bit-1 to logic 1 after it is enabled).

If using the Auto RTS interrupt:

- Enable RTS interrupt through IER bit-6 (after setting EFR bit-4). The UART issues an interrupt when the RTS# pin makes a transition from low to high: ISR bit-5 will be set to logic 1.

2.11 Auto RTS Halt and Resume

The RTS# pin will not be forced HIGH (RTS off) until the receive FIFO reaches the Halt Level (TCR[3:0]). The RTS# pin will return LOW after the RX FIFO is unloaded to the Resume Level (TCR[7:4]). Under these conditions, the V2170 will continue to accept data if the remote UART continues to transmit data. It is the responsibility of the user to ensure that the Halt Level is greater than the Resume Level. If interrupts are used, it is recommended that Halt Level > RX Trigger Level > Resume Level. The Auto RTS function is initiated when the RTS# output pin is asserted LOW (RTS On).

2.12 Auto CTS Flow Control

Automatic CTS flow control is used to prevent data overrun to the remote receiver FIFO. The CTS# input is monitored to suspend/restart the local transmitter. The auto CTS flow control feature is selected to fit specific application requirement (see Figure 12):

- Enable auto CTS flow control using EFR bit-7.

If using the Auto CTS interrupt:

- Enable CTS interrupt through IER bit-7 (after setting EFR bit-4). The UART issues an interrupt when the CTS# pin is de-asserted (HIGH): ISR bit-5 will be set to 1, and UART will suspend transmission as soon as

The product (or product(s) mentioned in this data sheet are no longer being manufactured and may not be ordered (OBS)

the stop bit of the character in process is shifted out. Transmission is resumed after the CTS# input is re-asserted (LOW), indicating more data may be sent.

FIGURE 12. AUTO RTS AND CTS FLOW CONTROL OPERATION

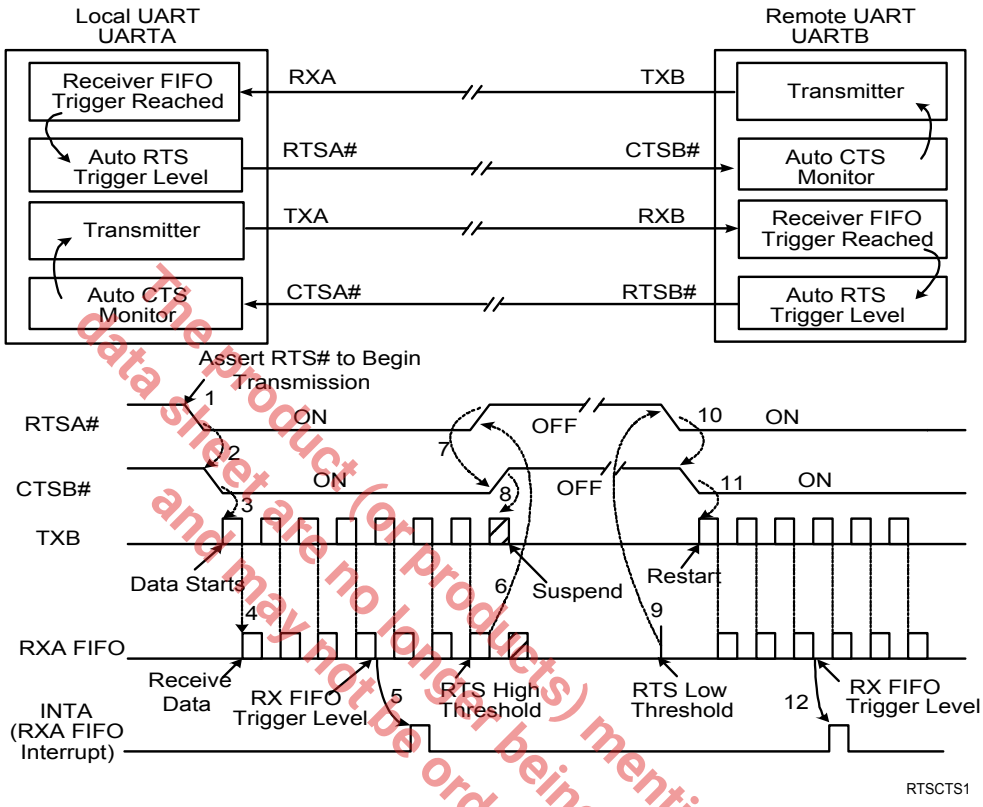

The local UART (UARTA) starts data transfer by asserting RTSA# (1). RTSA# is normally connected to CTSB# (2) of remote UART (UARTB). CTSB# allows its transmitter to send data (3). TXB data arrives and fills UARTA receive FIFO (4). When RXA data fills up to its receive FIFO trigger level, UARTA activates its RXA data ready interrupt (5) and continues to receive and put data into its FIFO. If interrupt service latency is long and data is not being unloaded, UARTA monitors its receive data fill level to match the upper threshold of RTS delay and de-assert RTSA# (6). CTSB# follows (7) and request UARTB transmitter to suspend data transfer. UARTB stops or finishes sending the data bits in its transmit shift register (8). When receive FIFO data in UARTA is unloaded to match the lower threshold of RTS delay (9), UARTA re-asserts RTSA# (10), CTSB# recognizes the change (11) and restarts its transmitter and data flow again until next receive FIFO trigger (12). This same event applies to the reverse direction when UARTA sends data to UARTB with RTSB# and CTSA# controlling the data flow.

The product (or products) mentioned in this data sheet are no longer being manufactured and may not be ordered (OBS)

2.13 Auto Xon/Xoff (Software) Flow Control

When software flow control is enabled (See Table 15), the V2170 compares one or two sequential receive data characters with the programmed Xon or Xoff-1,2 character value(s). If receive character(s) (RX) match the programmed values, the V2170 will halt transmission (TX) as soon as the current character has completed transmission. When a match occurs, the Xoff (if enabled via IER bit-5) flag will be set and the interrupt output pin will be activated. Following a suspension due to a match of the Xoff character, the V2170 will monitor the receive data stream for a match to the Xon-1,2 character. If a match is found, the V2170 will resume operation and clear the flags (ISR bit-4).

Upon power-up, the contents of the Xon/Xoff 8-bit flow control registers to 0x00. The user can write any Xon/Xoff value desired for software flow control. These registers are not reset by a hardware or software reset. Different conditions can be set to detect Xon/Xoff characters (See Table 15) and suspend/resume transmissions. When double 8-bit Xon/Xoff characters are selected, the V2170 compares two consecutive receive characters with two software flow control 8-bit values (Xon1, Xon2, Xoff1, Xoff2) and controls TX transmissions accordingly. Under the above described flow control mechanisms, flow control characters are not placed (stacked) in the user accessible RX data buffer or FIFO.

In the event that the receive buffer is overfilling and flow control needs to be executed, the V2170 automatically sends the Xoff-1,2 via the serial TX output to the remote modem when the RX FIFO reaches the Halt Level (TCR[3:0]). To clear this condition, the V2170 will transmit the programmed Xon-1,2 characters as soon as RX FIFO falls down to the Resume Level.

The product (or product(s) mentioned in this data sheet are no longer performance manufactured and may not be ordered (OBS)

2.14 Special Character Detect

A special character detect feature is provided to detect an 8-bit character when bit-5 is set in the Enhanced Feature Register (EFR). When this character (Xoff2) is detected, it will be placed in the FIFO along with normal incoming RX data.

The V2170 compares each incoming receive character with Xoff-2 data. If a match exists, the received data will be transferred to FIFO and ISR bit-4 will be set to indicate detection of special character. Although the Internal Register Table shows Xon, Xoff Registers with eight bits of character information, the actual number of bits is dependent on the programmed word length. Line Control Register (LCR) bits 0-1 defines the number of character bits, i.e., either 5 bits, 6 bits, 7 bits, or 8 bits. The word length selected by LCR bits 0-1 also determines the number of bits that will be used for the special character comparison.

2.15 Sleep Mode with Auto Wake-Up

The V2170 supports low voltage system designs, hence, a sleep mode is included to reduce its power consumption when the chip is not actively used. In the Partial Sleep mode, the internal oscillator of the UART or charge pump of the RS-232 transceiver is turned off to reduce the power consumption. In the Full Sleep mode, both the oscillator and the charge pump are turned off.

2.15.1 Partial Sleep Mode

There are two different partial sleep modes. In the first mode, the UART is in sleep mode and the charge pump is active. In the other mode, the UART is still active but the charge pump is turned off.

2.15.1.1 UART in sleep mode, RS-232 transceiver active

If the ACP pin is LOW, then the charge pump for the RS-232 transceiver will always be active. But the UART portion in the V2170 can still enter sleep mode if all of these conditions are satisfied:

- no interrupts pending (ISR bit-0 = 1)
- the 16-bit divisor programmed in DLM and DLL registers is a non-zero value
- sleep mode is enabled (IER bit-4 = 1)
- modem inputs are not toggling (MSR bits 0-3 = 0)
- RXD input pin is idling LOW

The V2170 UART portion stops its crystal oscillator to conserve power in this mode. The user can check the XTAL2 pin for no clock output as an indication that the device has entered the partial sleep mode.

The UART portion in the V2170 resumes normal operation or active mode by any of the following:

- a receive data start bit transition on the RXD input (LOW to HIGH)
- a data byte is loaded to the transmitter, THR or FIFO
- a change of logic state on any of the modem or general purpose serial inputs: CTS#, DSR#, CD#, RI#

If the UART portion of V2170 is awakened by any one of the above conditions, it will return to the sleep mode automatically after all interrupting conditions have been serviced and cleared. If the UART portion of V2170 is awakened by the modem inputs, a read to the MSR is required to reset the modem inputs. In any case, the sleep mode will not be entered while an interrupt is pending. The UART portion of V2170 will stay in the sleep mode of operation until it is disabled by setting IER bit-4 to a logic 0.

2.15.1.2 UART active, charge pump of RS-232 transceiver shut down

If the ACP pin is HIGH and the UART portion of the V2170 is not in sleep mode, then the charge pump will automatically shut down to conserve power if the following conditions are true:

- no activity on the TXD output signal
- modem input signals (RX) are LOW
- modem inputs have been idle for approximately 30 seconds

When these conditions are satisfied, the V2170 shuts down the charge pump and tri-states the RS-232 drivers to conserve power. In this mode, the RS-232 receivers are fully active and the internal registers of the V2170 can be accessed. The time for the charge pump to resume normal operation after exiting the sleep mode is typically 45µs. It will wake up by any of the following:

- a receive data start bit transition on the RXD input (LOW to HIGH)
- a data byte is loaded to the transmitter, THR or FIFO
- a LOW to HIGH transition on any of the modem or general purpose serial inputs

Because the receivers are fully active when the charge pump is turned off, any data received will be transferred to/from the UART without any issues.

2.15.2 Full Sleep Mode

In full sleep mode, the V2170 shuts down the charge pump and the internal oscillator. The V2170 enters the full sleep mode if the following conditions are satisfied:

- the UART portion of the V2170 is already in sleep mode (no output on XTAL2)
- the ACP (Autosleep for Charge Pump) pin is HIGH

When these conditions are satisfied, both the UART and the charge pump will be in the sleep mode. In this mode, the RS-232 receivers are fully active and the internal registers of the V2170 can be accessed. The V2170 exits the full sleep mode if either the ACP pin becomes LOW or the internal oscillator starts up. The time for the charge pump to resume normal operation after exiting the full sleep mode is typically 45µs.

If the serial clock, serial data, and modem input lines remain steady when the V2170 is in sleep mode, the maximum current will be in the microamp range as specified in the DC Electrical Characteristics on page 37.

A word of caution: owing to the starting up delay of the crystal oscillator after waking up from sleep mode, the first few receive characters may be lost. The number of characters lost during the restart also depends on your operating data rate. More characters are lost when operating at higher data rate. Also, it is important to keep RX input idling HIGH or “marking” condition during sleep mode to avoid receiving a “break” condition upon the restart. This may occur when the external interface transceivers (RS-232, RS-485 or another type) are also put to sleep mode and cannot maintain the “marking” condition. To avoid this, the designer can use a 47k-100k ohm pull-up resistor on the RX input pin.

The product(s) mentioned in this data sheet are no longer being manufactured and may not be ordered (OBS)

2.16 Internal Loopback

The V2170 UART provides an internal loopback capability for system diagnostic purposes. The internal loopback mode is enabled by setting MCR register bit-4 to logic 1. All regular UART functions operate normally. Figure 13 shows how the modem port signals are re-configured. Transmit data from the transmit shift register output is internally routed to the receive shift register input allowing the system to receive the same data that it was sending. The TX, RTS# and DTR# pins are held while the CTS#, DSR# CD# and RI# inputs are ignored. Caution: the RX input pin must be held HIGH during loopback test else upon exiting the loopback test the UART may detect and report a false "break" signal. Also, auto RTS/CTS flow control is not supported during internal loopback.

FIGURE 13. INTERNAL LOOP BACK

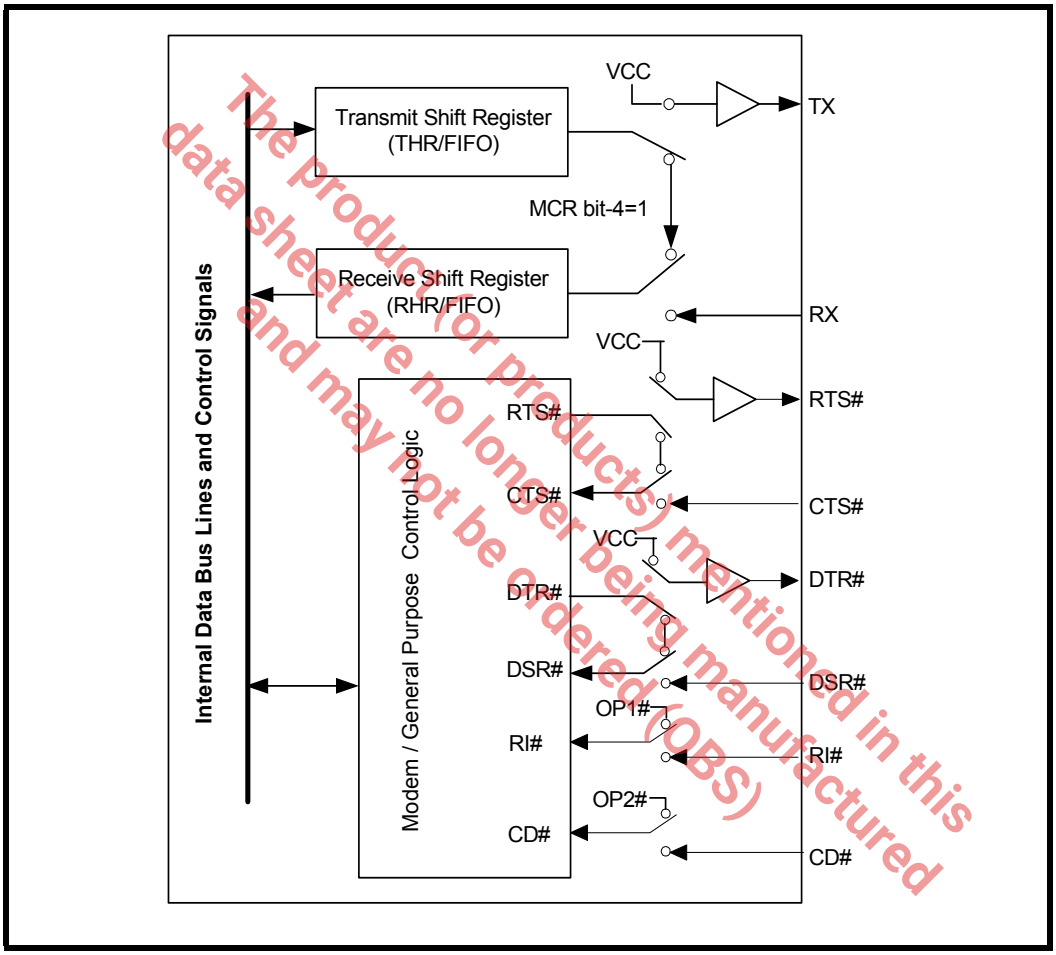

The product(s) mentioned in this data sheet are no longer being manufactured and may not be ordered (OBS)

3.0 UART INTERNAL REGISTERS

The complete register set is shown below in Table 7 and Table 8.

TABLE 7: UART INTERNAL REGISTER ADDRESSES

ADDRESS	REGISTER	READ/WRITE	COMMENTS
16C550 COMPATIBLE REGISTERS			
0X00	RHR - Receive Holding Register THR - Transmit Holding Register	Read-only Write-only	LCR[7] = 0
0X00	DLL - Divisor LSB	Read/Write	LCR[7] = 1, LCR ≠ 0xBF
0X01	DLM - Divisor MSB	Read/Write	
0X02	DLD - Divisor Fractional	Read/Write	LCR[7] = 1, LCR ≠ 0xBF, EFR[4] = 1
0X01	IER - Interrupt Enable Register	Read/Write	LCR[7] = 0
0X02	ISR - Interrupt Status Register FCR - FIFO Control Register	Read-only Write-only	
0X03	LCR - Line Control Register	Read/Write	
0X04	MCR - Modem Control Register	Read/Write	LCR ≠ 0xBF
0X05	LSR - Line Status Register	Read-only	
0X06	MSR - Modem Status Register	Read-only	See Table 12
0X07	SPR - Scratch Pad Register	Read/Write	See Table 13
0X06	TCR - Transmission Control Register	Read/Write	See Table 12
0X07	TLR - Trigger Level Register	Read/Write	See Table 13
0X08	TXLVL - Transmit FIFO Level	Read-only	LCR[7] = 0
0x09	RXLVL - Receive FIFO Level	Read-only	
0x0A	IODir - GPIO Direction Control Register	Read/Write	
0x0B	IOState - GPIO State Register	Read/Write	
0x0C	IOIntEna - GPIO Interrupt Enable Register	Read/Write	
0x0D	Reserved	-	
0x0E	IOControl - GPIO Control Register	Read/Write	
0x0F	EFCR - Extra Features Control Register	Read/Write	
0x02	EFR - Enhanced Function Register	Read/Write	LCR = 0xBF
0x04	Xon-1 - Xon Character 1	Read/Write	
0x05	Xon-2 - Xon Character 2	Read/Write	
0x06	Xoff-1 - Xoff Character 1	Read/Write	
0x07	Xoff-2 - Xoff Character 2	Read/Write	

The product(s) mentioned in this data sheet are no longer being manufactured and may not be ordered (OBS)

TABLE 8: INTERNAL REGISTERS DESCRIPTION. SHADED BITS ARE ENABLED WHEN EFR BIT-4=1

ADDR	REG NAME	READ/ WRITE	BIT-7	BIT-6	BIT-5	BIT-4	BIT-3	BIT-2	BIT-1	BIT-0	COMMENT
16C550 Compatible Registers											
0x00	RHR	RD	Bit-7	Bit-6	Bit-5	Bit-4	Bit-3	Bit-2	Bit-1	Bit-0	LCR[7]=0
0x00	THR	WR	Bit-7	Bit-6	Bit-5	Bit-4	Bit-3	Bit-2	Bit-1	Bit-0	
0x01	IER	RD/WR	0/ CTS Int. Enable	0/ RTS Int. Enable	0/ Xoff Int. Enable	0/ Sleep Mode Enable	Modem Stat. Int. Enable	RX Line Stat. Int. Enable	TX Empty Int Enable	RX Data Int. Enable	
0x02	ISR	RD	FIFOs Enabled	FIFOs Enabled	0/ INT Source Bit-5	0/ INT Source Bit-4	INT Source Bit-3	INT Source Bit-2	INT Source Bit-1	INT Source Bit-0	
0x02	FCR	WR	RX FIFO Trigger	RX FIFO Trigger	0/ TX FIFO Trigger	0/ TX FIFO Trigger	0	TX FIFO Reset	RX FIFO Reset	FIFOs Enable	
0x03	LCR	RD/WR	Divisor Enable	Set TX Break	Set Par-ity	Even Par-ity	Parity Enable	Stop Bits	Word Length Bit-1	Word Length Bit-0	
0x04	MCR	RD/WR	0/ Clock Pres-caler Select	0/	0/ XonAny	Internal Lopback Enable	OP2#	0/ Enable TCR and TLR	RTS# Output Control	DTR# Output Control	LCR≠0xBF
0x05	LSR	RD	RX FIFO Global Error	THR & TSR Empty	THR Empty	RX Break	RX Framing Error	RX Parity Error	RX Over-run Error	RX Data Ready	
0x06	MSR	RD	CD# Input	RI# Input	DSR# Input	CTS# Input	Delta CD#	Delta RI#	Delta DSR#	Delta CTS#	See **Table 12**
0x07	SPR	RD/WR	Bit-7	Bit-6	Bit-5	Bit-4	Bit-3	Bit-2	Bit-1	Bit-0	See **Table 13**
0x06	TCR	RD/WR	Resume Bit-3	Resume Bit-2	Resume Bit-1	Resume Bit-0	Halt Bit-3	Halt Bit-2	Halt Bit-1	Halt Bit-0	See **Table 12**
0x07	TLR	RD/WR	RX Trig Bit-3	RX Trig Bit-2	RX Trig Bit-1	RX Trig Bit-0	TX Trig Bit-3	TX Trig Bit-2	TX Trig Bit-1	TX Trig Bit-0	See **Table 13**
0x08	TXLVL	RD/WR	0	Bit-6	Bit-5	Bit-4	Bit-3	Bit-2	Bit-1	Bit-0	
0x09	RXLVL	RD/WR	0	Bit-6	Bit-5	Bit-4	Bit-3	Bit-2	Bit-1	Bit-0	

The product (or products) mentioned in this data sheet are no longer being manufactured and may not be ordered (OBS).

TABLE 8: INTERNAL REGISTERS DESCRIPTION. SHADED BITS ARE ENABLED WHEN EFR BIT-4=1

ADDR	REG NAME	READ/ WRITE	BIT-7	BIT-6	BIT-5	BIT-4	BIT-3	BIT-2	BIT-1	BIT-0	COMMENT
0x0A	IODir	RD/WR	0	0	1	0	Bit-3	Bit-2	Bit-1	Bit-0	
0x0B	IOState	RD/WR	0	0	0	0	Bit-3	Bit-2	Bit-1	Bit-0	
0x0C	IOIntEna	RD/WR	0	0	0	0	Bit-3	Bit-2	Bit-1	Bit-0	
0x0D	reserved	-	0	0	0	0	0	0	0	0	
0x0E	IOControl	RD/WR	0	0	0	0	UART SW Reset	0	1	IOLatch	
0x0F	EFCR	RD/WR	0	0	0	0	0	TX Disable	RX Disable	0	
Baud Rate Generator Divisor											
0x00	DLL	RD/WR	Bit-7	Bit-6	Bit-5	Bit-4	Bit-3	Bit-2	Bit-1	Bit-0	LCR[7]=1 LCR≠0xBF
0x01	DLM	RD/WR	Bit-7	Bit-6	Bit-5	Bit-4	Bit-3	Bit-2	Bit-1	Bit-0	
0x02	DLD	RD/WR	Bit-7	Bit-6	4X Mode	8X Mode	Fractional Divisor Bit-3	Fractional Divisor Bit-2	Fractional Divisor Bit-1	Fractional Divisor Bit-0	LCR[7]=1 LCR≠0xBF EFR[4]=1
Enhanced Registers											
0x02	EFR	RD/WR	Auto CTS Enable	Auto RTS Enable	Special Char Select	Enable IER [7:4], ISR [5:4], FCR[5:4], MCR[7:5], DLD	Software Flow Cntl Bit-3	Software Flow Cntl Bit-2	Software Flow Cntl Bit-1	Software Flow Cntl Bit-0	LCR=0xBF
0x04	XON1	RD/WR	Bit-7	Bit-6	Bit-5	Bit-4	Bit-3	Bit-2	Bit-1	Bit-0	
0x05	XON2	RD/WR	Bit-7	Bit-6	Bit-5	Bit-4	Bit-3	Bit-2	Bit-1	Bit-0	
0x06	XOFF1	RD/WR	Bit-7	Bit-6	Bit-5	Bit-4	Bit-3	Bit-2	Bit-1	Bit-0	
0x07	XOFF2	RD/WR	Bit-7	Bit-6	Bit-5	Bit-4	Bit-3	Bit-2	Bit-1	Bit-0	

The product (or products) mentioned in this data sheet are no longer being manufactured and may not be ordered (OBS)

4.0 INTERNAL REGISTER DESCRIPTIONS

4.1 Receive Holding Register (RHR) - Read- Only

SEE"RECEIVER" ON PAGE 13.

4.2 Transmit Holding Register (THR) - Write-Only

SEE"TRANSMITTER" ON PAGE 11.

4.3 Interrupt Enable Register (IER) - Read/Write

The Interrupt Enable Register (IER) masks the interrupts from receive data ready, transmit empty, line status and modem status registers. These interrupts are reported in the Interrupt Status Register (ISR).

4.3.1 IER versus Receive FIFO Interrupt Mode Operation

When the receive FIFO (FCR BIT-0 = 1) and receive interrupts (IER BIT-0 = 1) are enabled, the RHR interrupts (see ISR bits 2 and 3) status will reflect the following:

A. The receive data available interrupts are issued to the host when the FIFO has reached the programmed trigger level. It will be cleared when the FIFO drops below the programmed trigger level.

B. FIFO level will be reflected in the ISR register when the FIFO trigger level is reached. Both the ISR register status bit and the interrupt will be cleared when the FIFO drops below the trigger level.

C. The receive data ready bit (LSR BIT-0) is set as soon as a character is transferred from the shift register to the receive FIFO. It is reset when the FIFO is empty.

4.3.2 IER versus Receive/Transmit FIFO Polled Mode Operation

When FCR BIT-0 equals a logic 1 for FIFO enable; resetting IER bits 0-3 enables the XR20V2170 in the FIFO polled mode of operation. Since the receiver and transmitter have separate bits in the LSR either or both can be used in the polled mode by selecting respective transmit or receive control bit(s).

A. LSR BIT-0 indicates there is data in RHR or RX FIFO.

B. LSR BIT-1 indicates an overrun error has occurred and that data in the FIFO may not be valid.

C. LSR BIT 2-4 provides the type of receive data errors encountered for the data byte in RHR, if any.

D. LSR BIT-5 indicates THR is empty.

E. LSR BIT-6 indicates when both the transmit FIFO and TSR are empty.

F. LSR BIT-7 indicates a data error in at least one character in the RX FIFO.

IER[0]: RHR Interrupt Enable

The receive data ready interrupt will be issued when RHR has a data character in the non-FIFO mode or when the receive FIFO has reached the programmed trigger level in the FIFO mode.

- Logic 0 = Disable the receive data ready interrupt (default).
- Logic 1 = Enable the receiver data ready interrupt.

IER[1]: THR Interrupt Enable

This bit enables the Transmit Ready interrupt which is issued whenever the THR becomes empty in the non-FIFO mode or when spaces in the FIFO is above the programmed trigger level in the FIFO mode. If the THR is empty when this bit is enabled, an interrupt will be generated.

- Logic 0 = Disable Transmit Ready interrupt (default).
- Logic 1 = Enable Transmit Ready interrupt.

IER[2]: Receive Line Status Interrupt Enable

If any of the LSR register bits 1, 2, 3, 4 or 7 is a logic 1, it will generate an interrupt to inform the host controller about the error status of the current data byte in FIFO. LSR bit-1 generates an interrupt immediately when the character has been received. LSR bit-7 is set if any character in the RX FIFO has a parity or framing error, or is a break character. LSR[4:2] always show the error status for the received character available for reading from the RX FIFO. If IER[2] = 1, an LSR interrupt will be generated as long as LSR[7] = 1, ie. the RX FIFO contains at lease one character with an error.

- Logic 0 = Disable the receiver line status interrupt (default).
- Logic 1 = Enable the receiver line status interrupt.

IER[3]: Modem Status Interrupt Enable

- Logic 0 = Disable the modem status register interrupt (default).
- Logic 1 = Enable the modem status register interrupt.

The product (s) mentioned in this data sheet are no longer being manufactured and may not be ordered (OBS)

IER[4]: Sleep Mode Enable (requires EFR bit-4 = 1)

- Logic 0 = Disable Sleep Mode (default).
- Logic 1 = Enable Sleep Mode. See Sleep Mode section for further details.

IER[5]: Xoff Interrupt Enable (requires EFR bit-4=1)

- Logic 0 = Disable the software flow control, receive Xoff interrupt (default).
- Logic 1 = Enable the receive Xoff interrupt. See Software Flow Control section for details.

IER[6]: RTS# Output Interrupt Enable (requires EFR bit-4=1)

- Logic 0 = Disable the RTS# interrupt (default).
- Logic 1 = Enable the RTS# interrupt. The UART issues an interrupt when the RTS# pin makes a transition from low to high.

IER[7]: CTS# Input Interrupt Enable (requires EFR bit-4=1)

- Logic 0 = Disable the CTS# interrupt (default).
- Logic 1 = Enable the CTS# interrupt. The UART issues an interrupt when CTS# pin makes a transition from low to high.

4.4 Interrupt Status Register (ISR) - Read-Only

The UART provides multiple levels of prioritized interrupts to minimize external software interaction. The Interrupt Status Register (ISR) provides the user with six interrupt status bits. Performing a read cycle on the ISR will give the user the current highest pending interrupt level to be serviced, others are queued up to be serviced next. No other interrupts are acknowledged until the pending interrupt is serviced. The Interrupt Source Table, Table 9, shows the data values (bit 0-5) for the interrupt priority levels and the interrupt sources associated with each of these interrupt levels.

4.4.1 Interrupt Generation:

- LSR is by any of the LSR bits 1, 2, 3, 4 and 7.
- RXRDY is by RX trigger level.
- RXRDY Time-out is by a 4-char plus 12 bits delay timer.
- TXRDY is by TX trigger level or TX FIFO empty.
- MSR is by any of the MSR bits 0, 1, 2 and 3.
- GPIO is when any of the GPIO inputs toggle.
- Receive Xoff/Special character is by detection of a Xoff or Special character.
- CTS# is when its transmitter toggles the input pin (from LOW to HIGH) during auto CTS flow control.
- RTS# is when its receiver toggles the output pin (from LOW to HIGH) during auto RTS flow control.

4.4.2 Interrupt Clearing:

- LSR interrupt is cleared by reading all characters with errors out of the RX FIFO.
- RXRDY interrupt is cleared by reading data until FIFO falls below the trigger level.
- RXRDY Time-out interrupt is cleared by reading RHR.
- TXRDY interrupt is cleared by a read to the ISR register or writing to THR.
- MSR interrupt is cleared by a read to the MSR register.
- GPIO interrupt is cleared by reading the IOState register.
- Xoff interrupt is cleared when Xon character(s) is received.

The product (or products) mentioned in this data sheet are no longer being manufactured and may not be ordered (OBS)

- Special character interrupt is cleared by a read to ISR.
- RTS# and CTS# flow control interrupts are cleared by a read to the MSR register.

TABLE 9: INTERRUPT SOURCE AND PRIORITY LEVEL

PRIORITY LEVEL	ISR REGISTER STATUS BITS						SOURCE OF INTERRUPT
	BIT-5	BIT-4	BIT-3	BIT-2	BIT-1	BIT-0	
1	0	0	0	1	1	0	LSR (Receiver Line Status Register)
2	0	0	1	1	0	0	RXRDY (Receive Data Time-out)
3	0	0	0	1	0	0	RXRDY (Received Data Ready)
4	0	0	0	0	1	0	TXRDY (Transmit Ready)
5	0	0	0	0	0	0	MSR (Modem Status Register)
6	1	1	0	0	0	0	GPIO (General Purpose Inputs)
7	0	1	0	0	0	0	RXRDY (Received Xoff or Special character)
8	1	0	0	0	0	0	CTS#, RTS# change of state
-	0	0	0	0	0	1	None (default)

The product (or products) mentioned in this data sheet are no longer being manufactured and may not be ordered. (OBS)

ISR[0]: Interrupt Status

- Logic 0 = An interrupt is pending and the ISR contents may be used as a pointer to the appropriate interrupt service routine.
- Logic 1 = No interrupt pending (default condition).

ISR[3:1]: Interrupt Status

These bits indicate the source for a pending interrupt at interrupt priority levels (See Interrupt Source Table 9).

ISR[4]: Xoff/Xon or Special Character Interrupt Status

This bit is set when EFR[4] = 1 and IER[5] = 1. ISR bit-4 indicates that the receiver detected a data match of the Xoff character(s). If this is an Xoff interrupt, it is cleared when XON is received. If it is a special character interrupt, it is cleared by reading ISR.

ISR[5]: RTS#/CTS# Interrupt Status

This bit is enabled when EFR[4] = 1. ISR bit-5 indicates that the CTS# or RTS# has been de-asserted.

ISR[7:6]: FIFO Enable Status

These bits are set to a logic 0 when the FIFOs are disabled. They are set to a logic 1 when the FIFOs are enabled.

4.5 FIFO Control Register (FCR) - Write-Only

This register is used to enable the FIFOs, clear the FIFOs, and set the transmit/receive FIFO trigger levels. The FIFO mode is defined as follows:

FCR[0]: TX and RX FIFO Enable

- Logic 0 = Disable the transmit and receive FIFO (default).
- Logic 1 = Enable the transmit and receive FIFOs. This bit must be set to logic 1 when other FCR bits are written or they will not be programmed.

FCR[1]: RX FIFO Reset

This bit is only active when FCR bit-0 is a '1' and requires at least 3 XTAL clocks to reset.

- Logic 0 = No receive FIFO reset (default)
- Logic 1 = Reset the receive FIFO pointers and FIFO level counter logic (the receive shift register is not cleared or altered). This bit will return to a logic 0 after resetting the FIFO.

FCR[2]: TX FIFO Reset

This bit is only active when FCR bit-0 is a '1' and requires at least 3 XTAL clocks to reset.

- Logic 0 = No transmit FIFO reset (default).
- Logic 1 = Reset the transmit FIFO pointers and FIFO level counter logic (the transmit shift register is not cleared or altered). This bit will return to a logic 0 after resetting the FIFO.

FCR[3]: Reserved

This is a legacy register bit that does not have any functionality in the XR20V2170.

FCR[5:4]: Transmit FIFO Trigger Select (requires EFR bit-4=1)

(logic 0 = default, TX trigger level = 1)

These 2 bits set the trigger level for the transmit FIFO. The UART will issue a transmit interrupt when the number of spaces in the FIFO is above the selected trigger level, or when it gets empty in case that the FIFO did not get filled over the trigger level on last re-load. Table 10 shows the selections. The UART will issue a transmit interrupt when the number of available spaces in the FIFO is less than the transmit trigger level. Table 10 shows the selections.

FCR[7:6]: Receive FIFO Trigger Select

(logic 0 = default, RX trigger level =1)

These 2 bits are used to set the trigger level for the receive FIFO. The UART will issue a receive interrupt when the number of the characters in the FIFO is greater than the receive trigger level or when a receive data timeout occurs (see "Section 2.9, Receiver" on page 13).

The product (or products) mentioned in this data sheet are no longer being manufactured and may not be ordered (ORS)

TABLE 10: TRANSMIT AND RECEIVE FIFO TRIGGER LEVEL SELECTION

FCR BIT-7	FCR BIT-6	FCR BIT-5	FCR BIT-4	RECEIVE TRIGGER LEVEL (CHARACTERS)	TRANSMIT TRIGGER LEVEL (SPACES)
		0	0		8
		0	1		16
		1	0		32
		1	1		56
0	0			8	
0	1			16	
1	0			56	
1	1			60	

4.6 Line Control Register (LCR) - Read/Write

The Line Control Register is used to specify the asynchronous data communication format. The word or character length, the number of stop bits, and the parity are selected by writing the appropriate bits in this register.

LCR[1:0]: TX and RX Word Length Select

These two bits specify the word length to be transmitted or received.

BIT-1	BIT-0	WORD LENGTH
0	0	5
0	1	6 (default)
1	0	7
1	1	8

LCR[2]: TX and RX Stop-bit Length Select

The length of stop bit is specified by this bit in conjunction with the programmed word length.

BIT-2	WORD LENGTH	STOP BIT LENGTH (BIT TIME(S))
0	5,6,7,8	1
1	5	1-1/2
1	6,7,8	2 (default)

LCR[3]: TX and RX Parity Select

Parity or no parity can be selected via this bit. The parity bit is a simple way used in communications for data integrity check. See Table 11 for parity selection summary below.

- Logic 0 = No parity.
- Logic 1 = A parity bit is generated during the transmission while the receiver checks for parity error of the data character received (default).

LCR[4]: TX and RX Parity Select

If the parity bit is enabled with LCR bit-3 set to a logic 1, LCR bit-4 selects the even or odd parity format.

- Logic 0 = ODD Parity is generated by forcing an odd number of logic 1's in the transmitted character. The receiver must be programmed to check the same format.
- Logic 1 = EVEN Parity is generated by forcing an even number of logic 1's in the transmitted character. The receiver must be programmed to check the same format (default).

The product (or products) mentioned in this data sheet are no longer being manufactured and may not be ordered (OBS)

LCR[5]: TX and RX Parity Select

If the parity bit is enabled, LCR BIT-5 selects the forced parity format.

- LCR BIT-5 = logic 0, parity is not forced (default).
- LCR BIT-5 = logic 1 and LCR BIT-4 = logic 0, parity bit is forced to a logical 1 for the transmit and receive data.
- LCR BIT-5 = logic 1 and LCR BIT-4 = logic 1, parity bit is forced to a logical 0 for the transmit and receive data.

TABLE 11: PARITY SELECTION

LCR BIT-5	LCR BIT-4	LCR BIT-3	PARITY SELECTION
X	X	0	No parity
0	0	1	Odd parity
0	1	1	Even parity
1	0	1	Force parity to mark, “1”
1	1	1	Forced parity to space, “0”

The product (or products) mentioned in this data sheet are no longer being manufactured and may not be ordered (OBS)

LCR[6]: Transmit Break Enable

When enabled, the Break control bit causes a break condition to be transmitted (the TX output is forced to a “space", LOW state). This condition remains, until disabled by setting LCR bit-6 to a logic 0.

- Logic 0 = No TX break condition (default).
- Logic 1 = Forces the transmitter output (TX) to a “space”, LOW, for alerting the remote receiver of a line break condition.

LCR[7]: Baud Rate Divisors Enable

Baud rate generator divisor (DLL, DLM and DLD) enable.

- Logic 0 = Data registers are selected (default).
- Logic 1 = Divisor latch registers are selected.

4.7 Modem Control Register (MCR) or General Purpose Outputs Control - Read/Write

The MCR register is used for controlling the serial/modem interface signals or general purpose inputs/outputs.

MCR[0]: DTR# Output

The DTR# pin is a modem control output. If the modem interface is not used, this output may be used as a general purpose output.

- Logic 0 = Force DTR# output HIGH (default).
- Logic 1 = Force DTR# output LOW.

MCR[1]: RTS# Output

The RTS# pin is a modem control output and may be used for automatic hardware flow control by enabled by EFR bit-6. The RTS# pin can also be used for Auto RS485 Half-Duplex direction control enabled by FCTR bit-3. If the modem interface is not used, this output may be used as a general purpose output.

- Logic 0 = Force RTS# HIGH (default).
- Logic 1 = Force RTS# LOW.

MCR[2]: OP1# / TCR and TLR Enable

OP1# is not available as an output pin on the V2170. But it is available for use during Internal Loopback Mode (MCR[4] = 1). In the Internal Loopback Mode, this bit is used to write the state of the modem RI# interface signal.

This bit is also used to select between the MSR and TCR registers at address offset 0x6 and the SPR and TLR registers at address offset 0x7. Table 12 and Table 13 below shows how these registers are accessed.

TABLE 12: REGISTER AT ADDRESS OFFSET 0X6

EFR[4]	MCR[2]	Register at Address Offset 0x6
0	X	Modem Status Register (MSR)
1	0	Modem Status Register (MSR)
1	1	Trigger Control Register (TCR)

TABLE 13: REGISTER AT ADDRESS OFFSET 0X7

EFR[4]	MCR[2]	Register at Address Offset 0x7
0	X	Scratchpad Register (SPR)
1	0	Scratchpad Register (SPR)
1	1	Trigger Level Register (TLR)

The product (or products) mentioned in this data sheet are no longer being manufactured and may not be ordered (OBS)

MCR[3]: OP2# Output

OP2# is not available as an output on the V2170 but can be controlled in internal loopback mode.

- Logic 0 = OP2# output set HIGH(default).
- Logic 1 = OP2# output set LOW.

MCR[4]: Internal Loopback Enable

- Logic 0 = Disable loopback mode (default).
- Logic 1 = Enable local loopback mode, see loopback section and Figure 13.

MCR[5]: Xon-Any Enable (requires EFR bit-4=1 to write to this bit)

- Logic 0 = Disable Xon-Any function (default).
- Logic 1 = Enable Xon-Any function. In this mode, any RX character received will resume transmit operation. The RX character will be loaded into the RX FIFO, unless the RX character is an Xon or Xoff character and the V2170 is programmed to use the Xon/Xoff flow control.

MCR[6]: Reserved

MCR[7]: Clock Prescaler Select (requires EFR bit-4=1 to write to this bit)

- Logic 0 = Divide by one. The input clock from the crystal or external clock is fed directly to the Programmable Baud Rate Generator without further modification, i.e., divide by one (default).
- Logic 1 = Divide by four. The prescaler divides the input clock from the crystal or external clock by four and feeds it to the Programmable Baud Rate Generator, hence, data rates become one forth.

4.8 Line Status Register (LSR) - Read Only

This register provides the status of data transfers between the UART and the host.

LSR[0]: Receive Data Ready Indicator

- Logic 0 = No data in receive holding register or FIFO (default).
- Logic 1 = Data has been received and is saved in the receive holding register or FIFO.

LSR[1]: Receiver Overrun Error Flag

- Logic 0 = No overrun error (default).
- Logic 1 = Overrun error. A data overrun error condition occurred in the receive shift register. This happens when additional data arrives while the FIFO is full. In this case the previous data in the receive shift register is overwritten. Note that under this condition the data byte in the receive shift register is not transferred into the FIFO, therefore the data in the FIFO is not corrupted by the error.

LSR[2]: Receive Data Parity Error Tag

- Logic 0 = No parity error (default).
- Logic 1 = Parity error. The receive character in RHR does not have correct parity information and is suspect. This error is associated with the character available for reading in RHR.

LSR[3]: Receive Data Framing Error Tag

- Logic 0 = No framing error (default).
- Logic 1 = Framing error. The receive character did not have a valid stop bit(s). This error is associated with the character available for reading in RHR.

LSR[4]: Receive Break Error Tag

- Logic 0 = No break condition (default).
- Logic 1 = The receiver received a break signal (RX was LOW for at least one character frame time). In the FIFO mode, only one break character is loaded into the FIFO.

LSR[5]: Transmit Holding Register Empty Flag

This bit is the Transmit Holding Register Empty indicator. The THR bit is set to a logic 1 when the last data byte is transferred from the transmit holding register to the transmit shift register. The bit is reset to logic 0 concurrently with the data loading to the transmit holding register by the host. In the FIFO mode this bit is set when the transmit FIFO is empty, it is cleared when the transmit FIFO contains at least 1 byte.

LSR[6]: THR and TSR Empty Flag

This bit is set to a logic 1 whenever the transmitter goes idle. It is set to logic 0 whenever either the THR or TSR contains a data character. In the FIFO mode this bit is set to a logic 1 whenever the transmit FIFO and transmit shift register are both empty.

LSR[7]: Receive FIFO Data Error Flag

- Logic 0 = No FIFO error (default).
- Logic 1 = A global indicator for the sum of all error bits in the RX FIFO. At least one parity error, framing error or break indication is in the FIFO data. This bit clears when there is no more error(s) in any of the bytes in the RX FIFO.

4.9 Modem Status Register (MSR) - Read Only

This register provides the current state of the modem interface input signals. Lower four bits of this register are used to indicate the changed information. These bits are set to a logic 1 whenever a signal from the modem changes state. These bits may be used for general purpose inputs when they are not used with modem signals.

The product (or products) mentioned in this data sheet are no longer being manufactured and may not be ordered (OBS)

MSR[0]: Delta CTS# Input Flag

- Logic 0 = No change on CTS# input (default).
- Logic 1 = The CTS# input has changed state since the last time it was monitored. A modem status interrupt will be generated if MSR interrupt is enabled (IER bit-3).

MSR[1]: Delta DSR# Input Flag

- Logic 0 = No change on DSR# input (default).
- Logic 1 = The DSR# input has changed state since the last time it was monitored. A modem status interrupt will be generated if MSR interrupt is enabled (IER bit-3).

MSR[2]: Delta RI# Input Flag

- Logic 0 = No change on RI# input (default).
- Logic 1 = The RI# input has changed from a LOW to HIGH, ending of the ringing signal. A modem status interrupt will be generated if MSR interrupt is enabled (IER bit-3).

MSR[3]: Delta CD# Input Flag

- Logic 0 = No change on CD# input (default).
- Logic 1 = Indicates that the CD# input has changed state since the last time it was monitored. A modem status interrupt will be generated if MSR interrupt is enabled (IER bit-3).

MSR[4]: CTS Input Status

CTS# pin may function as automatic hardware flow control signal input if it is enabled and selected by Auto CTS (EFR bit-7). Auto CTS flow control allows starting and stopping of local data transmissions based on the modem CTS# signal. A HIGH on the CTS# pin will stop UART transmitter as soon as the current character has finished transmission, and a LOW will resume data transmission. Normally MSR bit-4 bit is the complement of the CTS# input. However in the loopback mode, this bit is equivalent to the RTS# bit in the MCR register. The CTS# input may be used as a general purpose input when the modem interface is not used.

MSR[5]: DSR Input Status

Normally this bit is the complement of the DSR# input. In the loopback mode, this bit is equivalent to the DTR# bit in the MCR register. The DSR# input may be used as a general purpose input when the modem interface is not used.

MSR[6]: RI Input Status

Normally this bit is the complement of the RI# input. In the loopback mode this bit is equivalent to bit-2 in the MCR register. The RI# input may be used as a general purpose input when the modem interface is not used.

MSR[7]: CD Input Status

Normally this bit is the complement of the CD# input. In the loopback mode this bit is equivalent to bit-3 in the MCR register. The CD# input may be used as a general purpose input when the modem interface is not used.

4.10 Scratch Pad Register (SPR) - Read/Write

This is a 8-bit general purpose register for the user to store temporary data. The content of this register is preserved during sleep mode but becomes 0xFF (default) after a power off-on cycle. There are also two other registers (TLR and FIFO Rdy) that share the same address location as the Scratch Pad Register. See Table 13.

4.11 Transmission Control Register (TCR) - Read/Write (requires EFR bit-4 = 1)

This register replaces MSR and is accessible only when MCR[2] = 1. This 8-bit register is used to store the RX FIFO threshold levels to halt/resume transmission during hardware or software flow control.

The product (or products) mentioned in this data sheet are no longer being manufactured and may not be ordered (OBS)

TCR[3:0]: RX FIFO Halt Level

A value of 0-60 (decimal value of TCR[3:0] multiplied by 4) can be selected as the Halt Level. When the RX FIFO is greater than or equal to this value, the RTS# output will be de-asserted if Auto RTS flow control is used or the XOFF character(s) will be transmitted if Auto XON/XOFF flow control is used. It is recommended that this value is greater than the RX Trigger Level.

TCR[7:4]: RX FIFO Resume Level

A value of 0-60 (decimal value of TCR[7:4] multiplied by 4) can be selected as the Resume Level. When the RX FIFO is less than or equal to this value, the RTS# output will be re-asserted if Auto RTS flow control is used or the XON character(s) will be transmitted if Auto XON/XOFF flow control is used. It is recommended that this value is less than the RX Trigger Level.

4.12 Trigger Level Register (TLR) - Read/Write (requires EFR bit-4 = 1)

This register replaces SPR and is accessible under the conditions listed in **Table 13**. This 8-bit register is used to store the RX and TX FIFO trigger levels used for interrupts.

TLR[3:0]: TX FIFO Trigger Level

A value of 4-60 (decimal value of TCR[3:0] multiplied by 4) can be selected as the TX FIFO Trigger Level. When the number of available spaces in the TX FIFO is greater than or equal to this value, a Transmit Ready interrupt is generated. For any non-zero value, TCR[3:0] will be used as the TX FIFO Trigger Level. If TCR[3:0] = 0x0, then the TX FIFO Trigger Level is the value selected by FCR[5:4]. See **Table 10**.

TLR[7:4]: RX FIFO Trigger Level

A value of 4-60 (decimal value of TCR[7:4] multiplied by 4) can be selected as the RX FIFO Trigger Level. When the number of characters received in the RX FIFO is greater than or equal to this value, a Receive Data Ready interrupt is generated (a Receive Data Timeout interrupt is independent of the RX FIFO Trigger Level and can be generated any time there is at least 1 byte in the RX FIFO and the RX input has been idle for the timeout period described in **"Section 2.9, Receiver" on page 13**). For any non-zero value, TCR[7:4] will be used as the RX FIFO Trigger Level. If TCR[7:4] = 0x0, then the RX FIFO Trigger Level is the value selected by FCR[7:6]. See **Table 10**.

4.13 Transmit FIFO Level Register (TXLVL) - Read-only

This register reports the number of spaces available in the TX FIFO. If the TX FIFO is empty, the TXLVL register will report that there are 64 spaces available. If the TX FIFO is full, the TXLVL register will report that there are 0 spaces available.

4.14 Receive FIFO Level Register (RXLVL) - Read-only

This register reports the number of characters available in the RX FIFO. If the RX FIFO is empty, the RXLVL register will report that there are 0 characters available. If the RX FIFO is full, the RXLVL register will report that there are 64 characcters available.

4.15 GPIO Direction Register (IODir) - Read/Write

This register is used to program the direction of the GPIO pins.

IODir[7:4]: Set up DTR#, DSR#, CD#, RI#

For normal operation, these bits should be set to '0010'.

IODir[3:0]: GPIO3 to GPIO0 I/O Direction Control

- Logic 0 = set GPIO pin as input
- Logic 1 = set GPIO pin as output

The product (or product mentioned in this data sheet are no longer being manufactured and may not be ordered (OBS)

4.16 GPIO State Register (IOState) = Read/Write

This register reports the state of all GPIO pins during a read and writes to any GPIO that is an output.

IOState[7:4]: Reserved

The values read from these bits should be ignored.

IOState[3:0]: GPIO[3:0] Status and Output control

If a GPIO is an input, then reading these bits will report the state of that pin. If a GPIO is an output, these bits will control the state of that pin.

- Logic 0 = set output pin LOW
- Logic 1 = set output pin HIGH

4.17 GPIO Interrupt Enable Register (IOIntEna) - Read/Write

This register enables the interrupt for the GPIO pins.

IOIntEna[7:4]: Reserved

These bits should be set to '0000'.

IOIntEna[3:0]: GPIO[3:0] Interrupt Enable

- Logic 0 = a change in the input pin will not generate an interrupt
- Logic 1 = a change in the input will generate an interrupt

4.18 GPIO Control Register (IOControl) - Read/Write

IOControl[7:4]: Reserved

IOControl[3]: UART Software Reset

Writing a logic 1 to this bit will reset the device. Once the device is reset, this bit will automatically be set to a logic 0.

IOControl[2]: Reserved

IOControl[1]: Enable DTR#, DSR#, CD#, RI#

For normal operation, this bit should be set to a logic 1.

IOControl[0]: IO Latch

This bit enable/disable GPIO inputs latching.

- Logic 0 = GPIO input values are not latched. A change in any GPIO input generates an interrupt. A read of the IOState register clears the interrupt. If the input goes back to its initial logic state before the input register is read, then the interrupt is cleared.
- Logic 1 = GPIO input values are latched. A change in the GPIO input generates an interrupt and the input logic value is loaded in the bit of the corresponding input state register (IOState). A read of the IOState register clears the interrupt. If the input pin goes back to its initial logic state before the interrupt register is read, then the interrupt is not cleared and the corresponding bit of the IOState register keeps the logic value that generated the interrupt.

4.19 Extra Features Control Register (EFCR) - Read/Write

EFCR[7:3]: Reserved

These bits are reserved and should be left at "0000".

The product (or products) mentioned in this datasheet are no longer being manufactured and may not be ordered (OBS)

EFCR[2]: Transmitter Disable

UART does not send serial data out on the TX output pin, but the TX FIFO will continue to receive data from CPU until full. Any data in the TSR will be sent out before the trasnmitter goes into disable state.

- Logic 0 = Transmitter is enabled
- Logic 1 = Transmitter is disabled

EFCR[1] = Receiver Disable

UART will stop receiving data immediately once this bit is set to a Logic 1. Any data that is being received in the TSR will be received correctly and sent to the RX FIFO.

- Logic 0 = Receiver is enabled
- Logic 1 = Receiver is disabled

EFCR[0]: Reserved

This bit is reserved and should remain at a logic 0.

4.20 Baud Rate Generator Registers (DLL, DLM and DLD[3:0]) - Read/Write

These registers make-up the value of the baud rate divisor. The concatenation of the contents of DLM and DLL is a 16-bit value is then added to DLD[3:0]/16 to achieve the fractional baud rate divisor. DLD must be enabled via EFR bit-4 before it can be accessed. **SEE"PROGRAMMABLE BAUD RATE GENERATOR WITH FRACTIONAL DIVISOR" ON PAGE 9.**

DLD[5:4]: Sampling Rate Select

These bits select the data sampling rate. By default, the data sampling rate is 16X. The maximum data rate will double if the 8X mode is selected and will quadruple if the 4X mode is selected. See **Table 14** below.

TABLE 14: SAMPLING RATE SELECT

DLD[5]	DLD[4]	SAMPLING RATE
0	0	16X
0	1	8X
1	X	4X

DLD[7:6]: Reserved

4.21 Enhanced Feature Register (EFR)

Enhanced features are enabled or disabled using this register. Bit 0-3 provide single or dual consecutive character software flow control selection (see **Table 15**). When the Xon1 and Xon2 and Xoff1 and Xoff2 modes are selected, the double 8-bit words are concatenated into two sequential characters. Caution: note that whenever changing the TX or RX flow control bits, always reset all bits back to logic 0 (disable) before programming a new setting.

The product(s) mentioned in this data sheet are no longer being manufactured and may not be ordered (OBS)

EFR[3:0]: Software Flow Control Select

Single character and dual sequential characters software flow control is supported. Combinations of software flow control can be selected by programming these bits.

TABLE 15: SOFTWARE FLOW CONTROL FUNCTIONS

EFR BIT-3 CONT-3	EFR BIT-2 CONT-2	EFR BIT-1 CONT-1	EFR BIT-0 CONT-0	TRANSMIT AND RECEIVE SOFTWARE FLOW CONTROL
0	0	0	0	No TX and RX flow control (default and reset)
0	0	X	X	No transmit flow control
1	0	X	X	Transmit Xon1, Xoff1
0	1	X	X	Transmit Xon2, Xoff2
1	1	X	X	Transmit Xon1 and Xon2, Xoff1 and Xoff2
X	X	0	0	No receive flow control
X	X	1	0	Receiver compares Xon1, Xoff1
X	X	0	1	Receiver compares Xon2, Xoff2
1	0	1	1	Transmit Xon1, Xoff1 Receiver compares Xon1 or Xon2, Xoff1 or Xoff2
0	1	1	1	Transmit Xon2, Xoff2 Receiver compares Xon1 or Xon2, Xoff1 or Xoff2
1	1	1	1	Transmit Xon1 and Xon2, Xoff1 and Xoff2, Receiver compares Xon1 and Xon2, Xoff1 and Xoff2
0	0	1	1	No transmit flow control, Receiver compares Xon1 and Xon2, Xoff1 and Xoff2

The product (or products) mentioned in this data sheet are no longer being manufactured and may not be ordered (OBS)

EFR[4]: Enhanced Function Bits Enable

Enhanced function control bit. This bit enables IER bits 4-7, ISR bits 4-5, FCR bits 4-5, MCR bits 2 and 5-7, TCR, TLR and DLD to be modified. After modifying any enhanced bits, EFR bit-4 can be set to a logic 0 to latch the new values. This feature prevents legacy software from altering or overwriting the enhanced functions once set. Normally, it is recommended to leave it enabled, logic 1.

- Logic 0 = modification disable/latch enhanced features. IER bits 4-7, ISR bits 4-5, FCR bits 4-5, MCR bits 2 and 5-7, and DLD are saved to retain the user settings. After a reset, the IER bits 4-7, ISR bits 4-5, FCR bits 4-5, MCR bits 5-7, and DLD are set to a logic 0 to be compatible with ST16C550 mode (default).
- Logic 1 = Enables the above-mentioned register bits to be modified by the user.

EFR[5]: Special Character Detect Enable

- Logic 0 = Special Character Detect Disabled (default).
- Logic 1 = Special Character Detect Enabled. The UART compares each incoming receive character with data in Xoff-2 register. If a match exists, the receive data will be transferred to FIFO and ISR bit-4 will be set to indicate detection of the special character. Bit-0 corresponds with the LSB bit of the receive character. If flow control is set for comparing Xon1, Xoff1 (EFR [1:0]= '10') then flow control and special character work normally. However, if flow control is set for comparing Xon2, Xoff2 (EFR[1:0]= '01') then flow control works normally, but Xoff2 will not go to the FIFO, and will generate an Xoff interrupt and a special character interrupt, if enabled via IER bit-5.

EFR[6]: Auto RTS Flow Control Enable

RTS# output may be used for hardware flow control by setting EFR bit-6 to logic 1. When Auto RTS is selected, an interrupt will be generated when the receive FIFO is filled to the programmed trigger level and RTS de-asserts HIGH at the programmed HALT level. RTS# will return LOW when FIFO data falls below the programmed RESUME level. The RTS# output must be asserted (LOW) before the auto RTS can take effect. RTS# pin will function as a general purpose output when hardware flow control is disabled.

- Logic 0 = Automatic RTS flow control is disabled (default).
- Logic 1 = Enable Automatic RTS flow control.

EFR[7]: Auto CTS Flow Control Enable

Automatic CTS Flow Control.

- Logic 0 = Automatic CTS flow control is disabled (default).
- Logic 1 = Enable Automatic CTS flow control. Data transmission stops when CTS# input de-asserts HIGH. Data transmission resumes when CTS# returns LOW.

4.21.1 Software Flow Control Registers (XOFF1, XOFF2, XON1, XON2) - Read/Write

These registers are used as the programmable software flow control characters xoff1, xoff2, xon1, and xon2. For more details, see Table 8.

The product (or products) mentioned in this data sheet are no longer being manufactured and may not be ordered (OBS)

TABLE 16: UART RESET STATES

REGISTERS	RESET STATE
DLM, DLL	DLM = 0x00 and DLL = 0x01[1]
DLD	Bits 7-0 = 0x00
RHR	Bits 7-0 = 0xXX
THR	Bits 7-0 = 0xXX
IER	Bits 7-0 = 0x00
FCR	Bits 7-0 = 0x00
ISR	Bits 7-0 = 0x01
LCR	Bits 7-0 = 0x1D
MCR	Bits 7-0 = 0x00
LSR	Bits 7-0 = 0x60
MSR	Bits 3-0 = Logic 0 Bits 7-4 = Logic levels of the inputs inverted
SPR	Bits 7-0 = 0xFF[1]
TCR	Bits 7-0 = 0x0F
TLR	Bits 7-0 = 0x00
TXLVL	Bits 7-0 = 0x40
RXLVL	Bits 7-0 = 0x00
IODir	Bits 7-0 = 0x00
IOState	Bits 7-0 = 0x00
IOIntEna	Bits 7-0 = 0x00
IOCont	Bits 7-0 = 0x00
EFCR	Bits 7-0 = 0x00
EFR	Bits 7-0 = 0x00
XON1	Bits 7-0 = 0x00[1]
XON2	Bits 7-0 = 0x00[1]
XOFF1	Bits 7-0 = 0x00[1]
XOFF2	Bits 7-0 = 0x00[1]
I/O SIGNALS	**RESET STATE**
TX	HIGH
RTS#	HIGH
DTR#	HIGH
IRQ#	HIGH

NOTE: [1] Only resets to these values during a power up. They do not reset when the RESET# pin is asserted or during software reset IOCont[3] = 1.

The product (or products) mentioned in this data sheet are no longer being manufactured and may not be ordered (OBS)

5.0 ELECTRICAL CHARACTERISTICS

ABSOLUTE MAXIMUM RATINGS

Power Supply Range	4 Volts
Voltage at Any Pin	GND-0.3V to 4V
Operating Temperature	-40° to +85°C
Storage Temperature	-65° to +150°C
Package Dissipation	500 mW

TYPICAL PACKAGE THERMAL RESISTANCE DATA *(MARGIN OF ERROR: ± 15%)*

Thermal Resistance (40-QFN)	theta-ja = 40°C/W, theta-jc = 13°C/W

The product (or products) mentioned in this data sheet are no longer being manufactured and may not be ordered (OBS)

ELECTRICAL CHARACTERISTICS

UNLESS OTHERWISE NOTED: TA= - 40 to + 85, VCC= 2.97-3.63V

SYMBOL	PARAMETER	3.3V LIMITS MIN	MAX	UNITS	CONDITIONS
DC CHARACTERISTICS					
ICC	Supply Current, Normal Mode		30	mA	VCC=2.97V to 3.63V, TA=+25C, no load
ISLP	Supply Current, Partial Sleep Mode (UART sleep, Transceiver active)		28	mA	VCC=2.97V to 3.63V, TA=+25C, no load
ISLP	Supply Current, Partial Sleep Mode (UART active, Transceiver sleep)		2	mA	VCC=2.97V to 3.63V, TA=+25C, no load
ISLP/IPWS	Supply Current, Full Sleep Mode (UART sleep, Transceiver sleep)		20	uA	VCC=2.97V to 3.63V, TA=+25C, no load, all inputs are idle
OSCILLATOR INPUT (X1)					
VILCK	Clock Input Low Level	-0.3	0.6	V	
VIHCK	Clock Input High Level	2.4	VCC	V	
LOGIC INPUTS/OUTPUTS (XTAL1, SDA, SCL, A1/SI, A0/CS#, SO, IRQ#, RST#, PWRSAVE, ACP)					
V_{ILCK}	Clock Input Low Level	-0.3	0.6	V	
V_{IHCK}	Clock Input High Level	2.4	VCC	V	
VIL	Input Low Voltage	-0.3	0.8	V	
VIH	Input High Voltage	2.0	VCC	V	
VOL	Output Low Voltage		0.4	V	I_{OL} = 4 mA
VOH	Output High Voltage	2.0		V	I_{OH} = -1 mA
IIL	Input Low Leakage Current		±10	uA	
IHL	Input High Leakage Current		±10	uA	
RS-232 INPUTS (RXD, CTS, DSR, RI, DCD)					
	Input Voltage Range		±15	V	
VIHR	Input Threshold Low	0.6		V	TA=+25C
VILR	Input Threshold High		2.0	V	TA=+25C
VHYS	Input Hysteresis		0.5	V	
RTR	Input Transmition Resistance	3	7	K ohm	TA=+25C
RS-232 OUTPUTS (TXD, RTS, DTR)					
	Output Voltage Range	±5.0	±6.5	V	3K ohm load on all transmitter outputs
ROR	Output Resistance	300		ohm	Vcc=0V, transmitter output=+/-2V
IOS	Output Short-Circuit Current		±60	mA	
RS-232 AC TIMING (TXD)					
	Maximum Data Rate		250	Kbps	RL=3Kohm, CL=1000pF
	Transmitter Slew Rate		30	V/us	CL = 50pF to 2500pF, RL=3-7Kohm

The product (or products) mentioned in this data sheet are no longer being manufactured and may not be ordered (OBS)

AC ELECTRICAL CHARACTERISTICS - UART CLOCK

Unless otherwise noted: TA=-40° to +85°C, Vcc=2.97 - 3.63V

SYMBOL	PARAMETER	LIMITS 3.3V ± 10% MIN	MAX	UNIT
XTAL1	UART Crystal Oscillator		24	MHz
ECLK	UART External Clock		64	MHz
T_{ECLK}	External Clock Time Period	7		ns

FIGURE 14. CLOCK TIMING

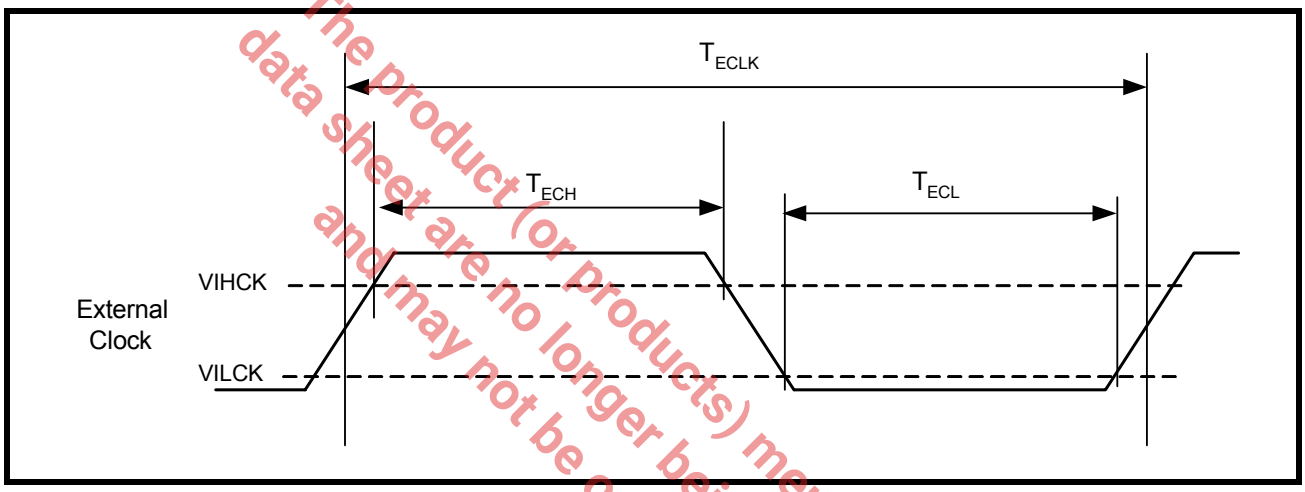

The product (or products) mentioned in this data sheet are no longer being manufactured and may not be ordered (OBS)

AC ELECTRICAL CHARACTERISTICS - I2C-BUS TIMING SPECIFICATIONS

Unless otherwise noted: TA=-40° to +85°C, Vcc=2.97 - 3.63V

SYMBOL	PARAMETER	STANDARD MODE I2C-BUS MIN	STANDARD MODE I2C-BUS MAX	FAST MODE I2C-BUS MIN	FAST MODE I2C-BUS MAX	UNIT
f_{SCL}	Operating frequency	0	100	0	400	kHz
T_{BUF}	Bus free time between STOP and START	4.7		1.3		µs
$T_{HD;STA}$	START condition hold time	4.0		0.6		µs
$T_{SU;STA}$	START condition setup time	4.7		0.6		µs
$T_{HD;DAT}$	Data hold time	0		0		ns
$T_{VD;ACK}$	Data valid acknowledge		0.6		0.6	µs
$T_{VD;DAT}$	SCL LOW to data out valid		0.6		0.6	ns
$T_{SU;DAT}$	Data setup time	250		150		ns
T_{LOW}	Clock LOW period	4.7		1.3		µs
T_{HIGH}	Clock HIGH period	4.0		0.6		µs
T_F	Clock/data fall time		300		300	ns
T_R	Clock/data rise time		1000		300	ns
T_{SP}	Pulse width of spikes tolerance	0.5		0.5		µs
T_{D1}	I^2C-bus GPIO output valid	0.2		0.2		µs
T_{D2}	I^2C-bus modem input interrupt valid	0.2		0.2		µs
T_{D3}	I^2C-bus modem input interrupt clear	0.2		0.2		µs
T_{D4}	I^2C input pin interrupt valid	0.2		0.2		µs
T_{D5}	I^2C input pin interrupt clear	0.2		0.2		µs
T_{D6}	I^2C-bus receive interrupt valid	0.2		0.2		µs
T_{D7}	I^2C-bus receive interrupt clear	0.2		0.2		µs
T_{D8}	I^2C-bus transmit interrupt clear	1.0		0.5		µs
T_{D15}	SCL delay after reset	3		3		µs

The product (or products) mentioned in this data sheet are no longer being manufactured and may not be ordered (OBS)

FIGURE 15. SCL DELAY AFTER RESET

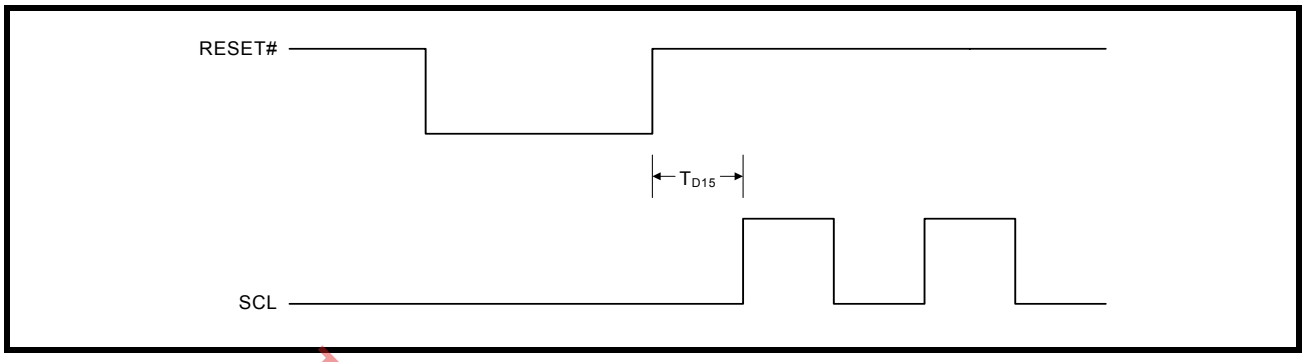

The Product (or products) mentioned in this data sheet are no longer being manufactured and may not be ordered (OBS)

FIGURE 16. I²C-BUS TIMING DIAGRAM

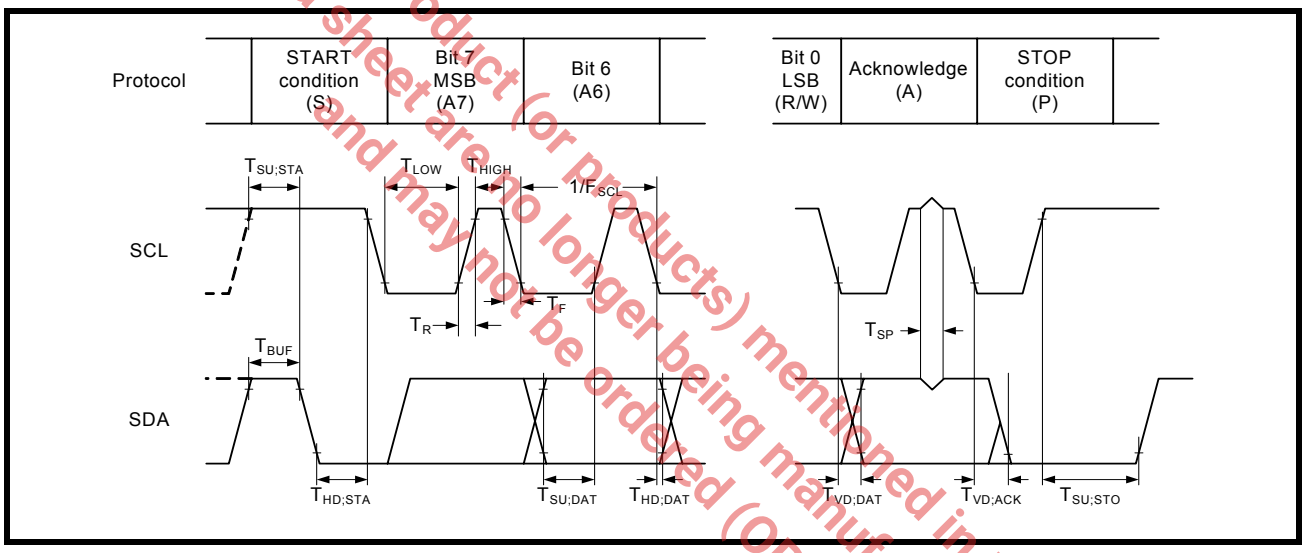

FIGURE 17. WRITE TO OUTPUT

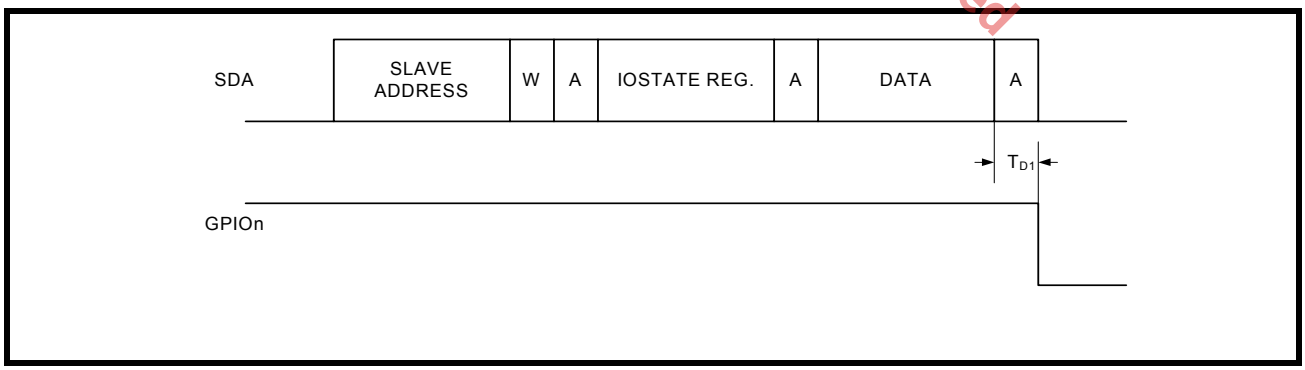

FIGURE 18. MODEM INPUT PIN INTERRUPT

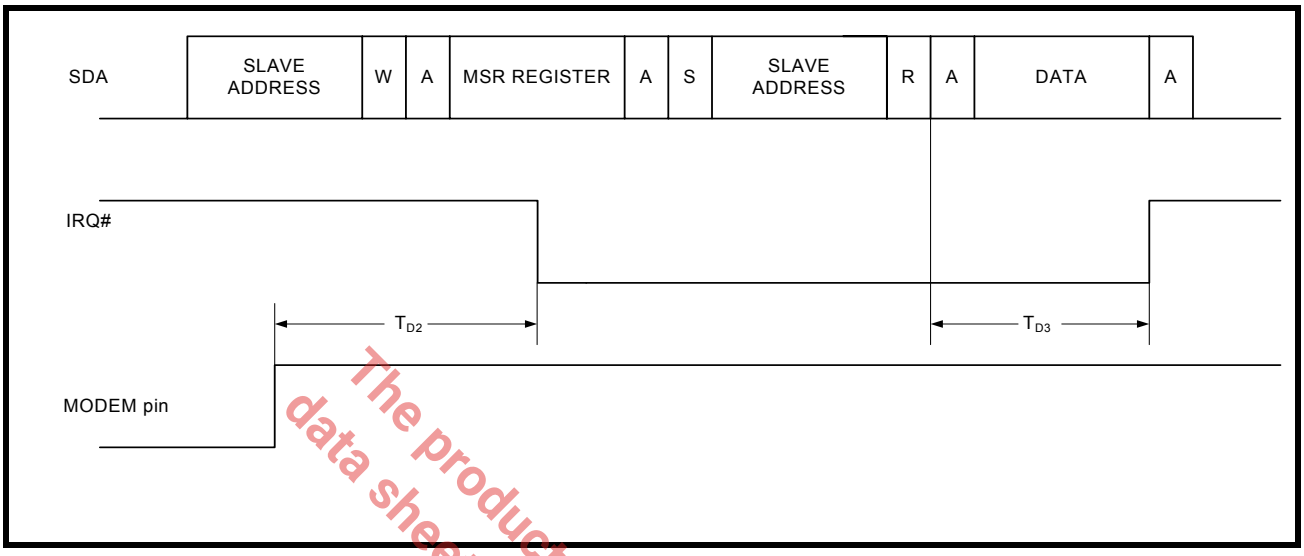

FIGURE 19. GPIO PIN INTERRUPT

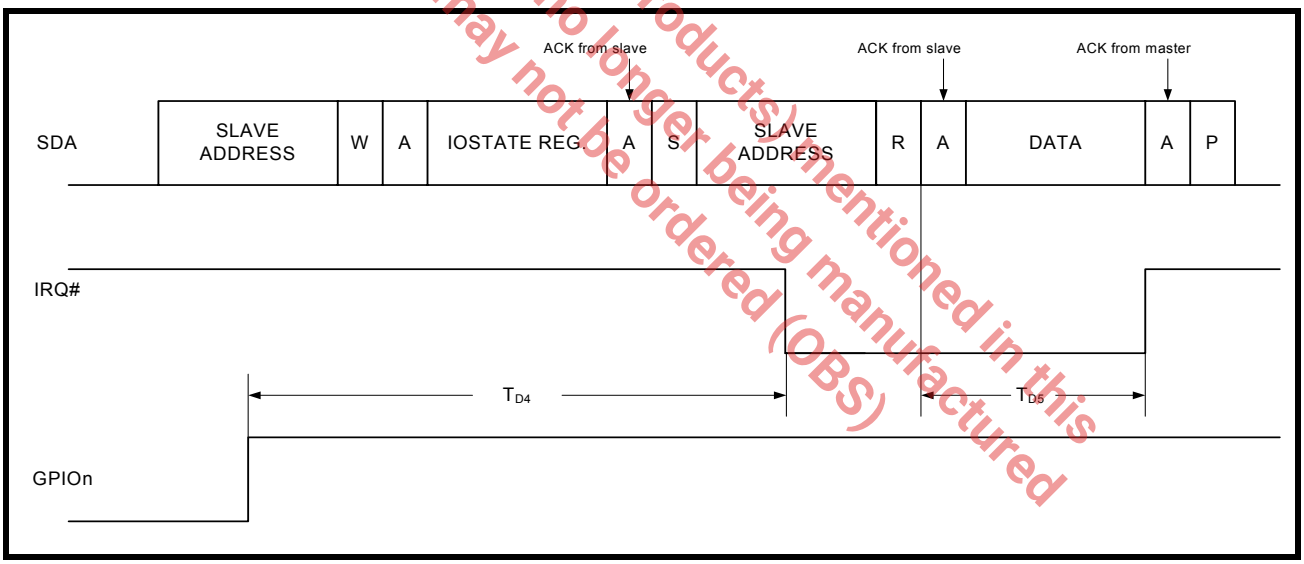

The product (or products) mentioned in this data sheet are no longer being manufactured and may not be ordered (OBS)

FIGURE 20. RECEIVE INTERRUPT

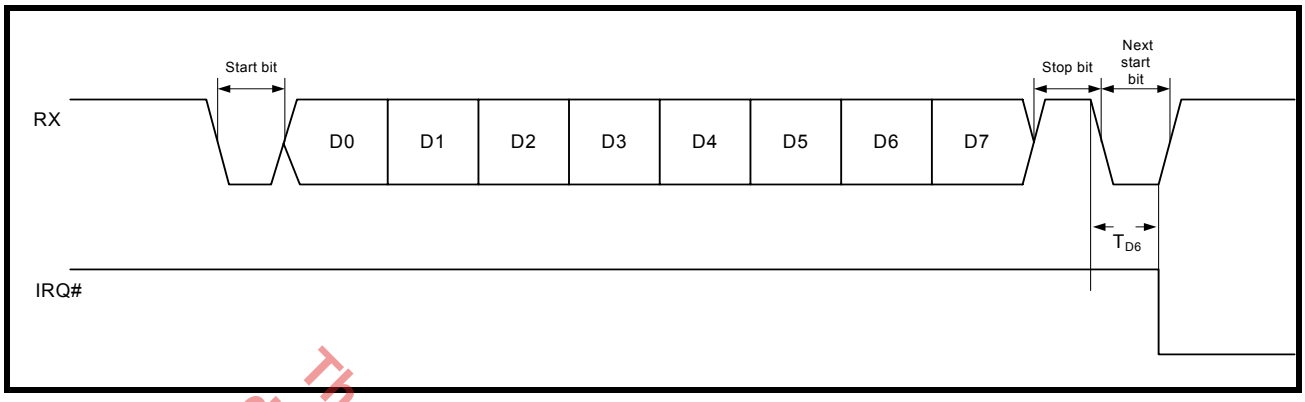

The product(or products) mentioned in this datasheet are no longer being manufactured and may not be ordered (OBS)

FIGURE 21. RECEIVE INTERRUPT CLEAR

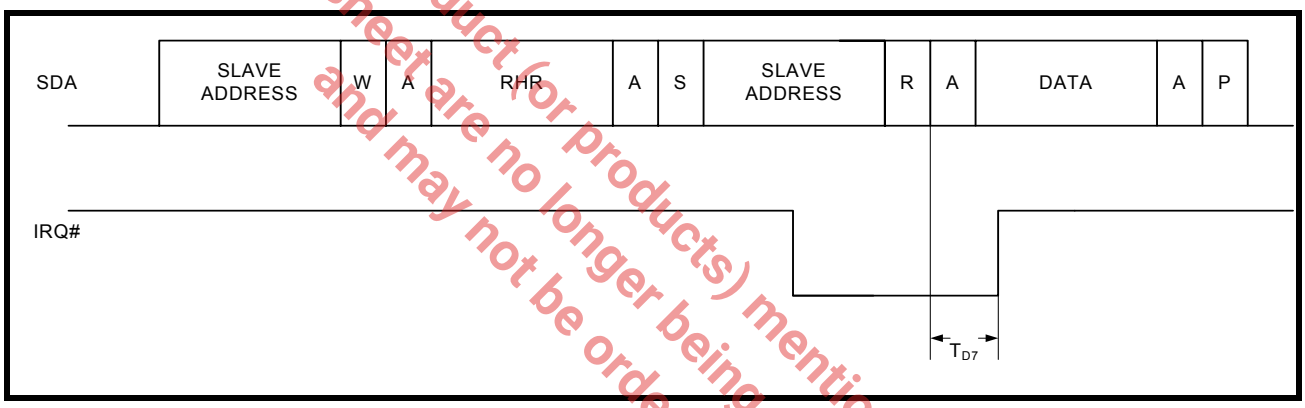

FIGURE 22. TRANSMIT INTERRUPT CLEAR

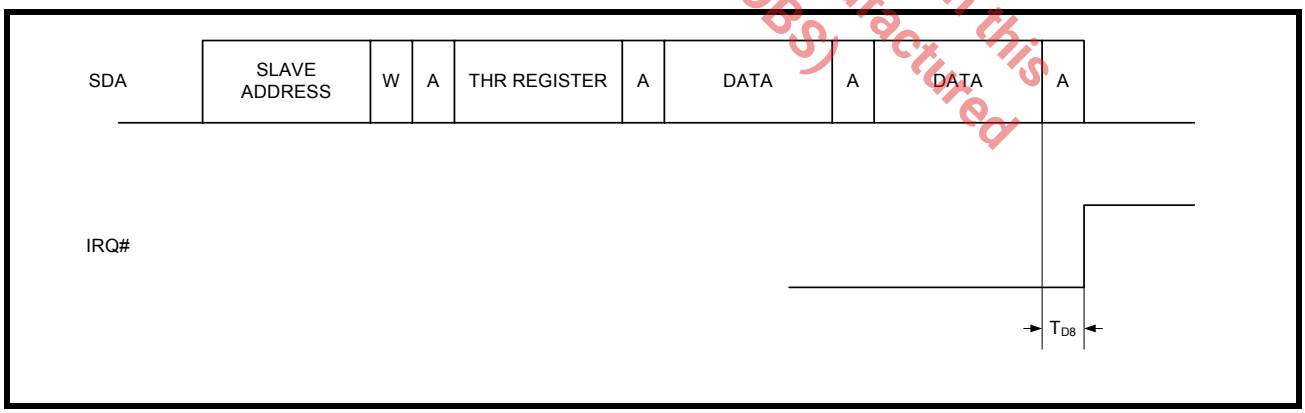

AC ELECTRICAL CHARACTERISTICS - SPI-BUS TIMING SPECIFICATIONS

Unless otherwise noted: TA=-40° to +85°C, Vcc=2.97 - 3.63V

SYMBOL	PARAMETER	LIMITS 3.3V ± 10% MIN	MAX	UNIT	CONDITIONS
f_{SCL}	SPI clock frequency		18	MHz	
T_{TR}	CS# HIGH to SO three-state time		100	ns	C_L = 70 pF
T_{CSS}	CS# to SCL setup time	100		ns	
T_{CSH}	CS# to SCL hold time	20		ns	
T_{DO}	SCL fall to SO valid time		15	ns	C_L = 70 pF
T_{DS}	SI to SCL setup time	15		ns	
T_{DH}	SI to SCL hold time	10		ns	
T_{CP}	SCL period time	55		ns	T_{CH} + T_{CL}
T_{CH}	SCL HIGH time	27		ns	
T_{CL}	SCL LOW time	27		ns	
T_{CSW}	CS# HIGH pulse width	200		ns	
T_{D9}	SPI output data valid	200		ns	
T_{D10}	SPI modem output data valid	200		ns	
T_{D11}	SPI transmit interrupt clear	200		ns	
T_{D12}	SPI modem input interrupt clear	200		ns	
T_{D13}	SPI input pin interrupt clear	200		ns	
T_{D14}	SPI receive interrupt clear	200		ns	

The product (or products) mentioned in this data sheet are no longer being manufactured and may not be ordered (OBS)

FIGURE 23. SPI-BUS TIMING

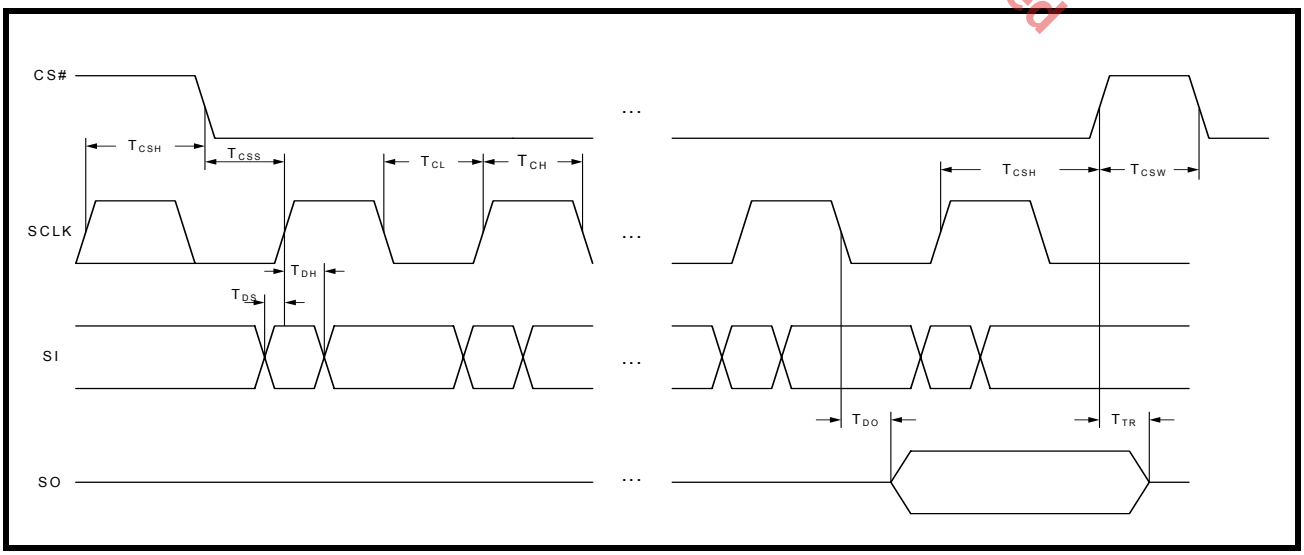

FIGURE 24. SPI WRITE MCR TO DTR OUTPUT SWITCH

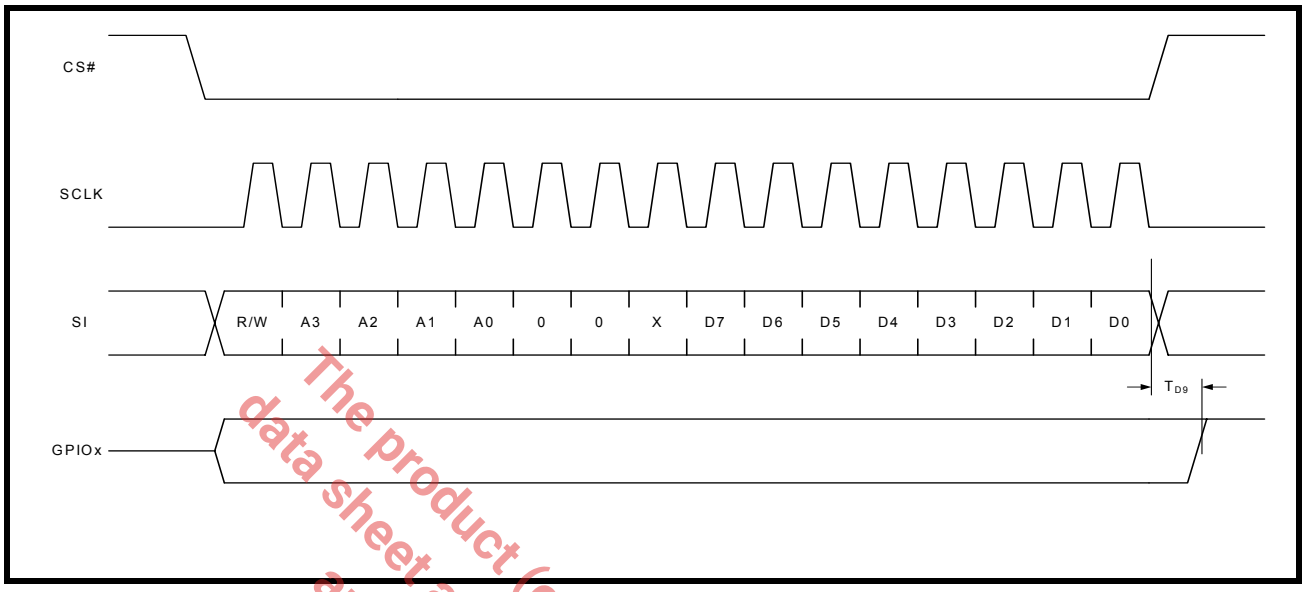

The product (or products) mentioned in this data sheet are no longer being manufactured and may not be ordered (OBS)

FIGURE 25. SPI WRITE MCR TO DTR OUTPUT SWITCH

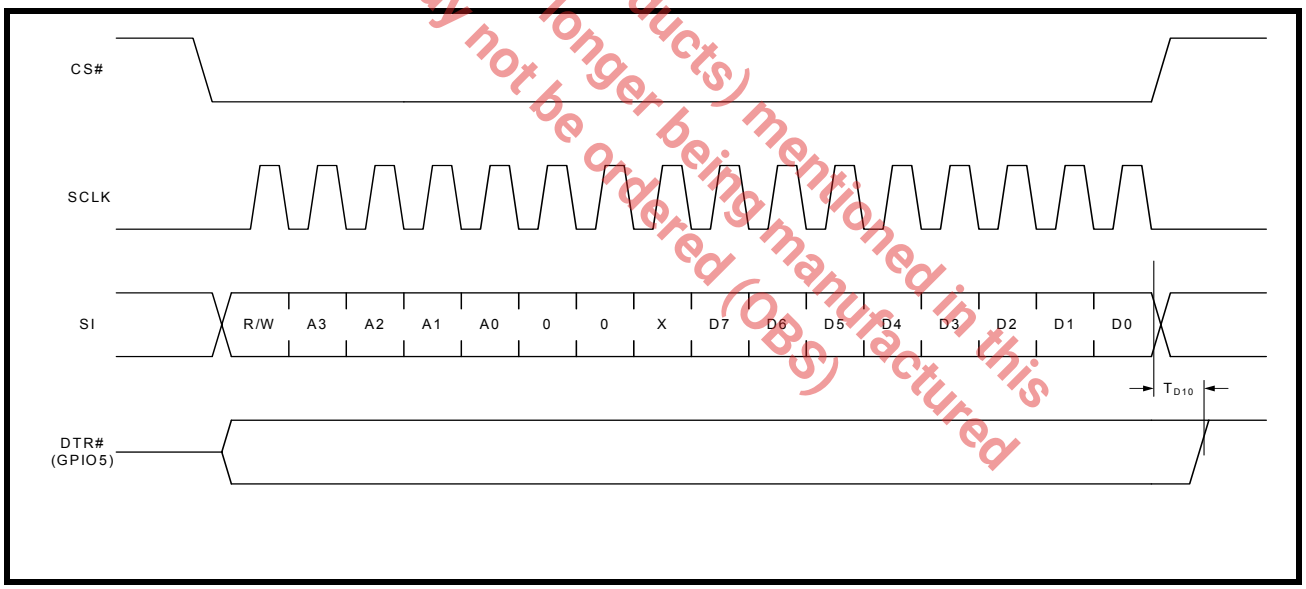

FIGURE 26. SPI WRITE THR TO CLEAR TX INT

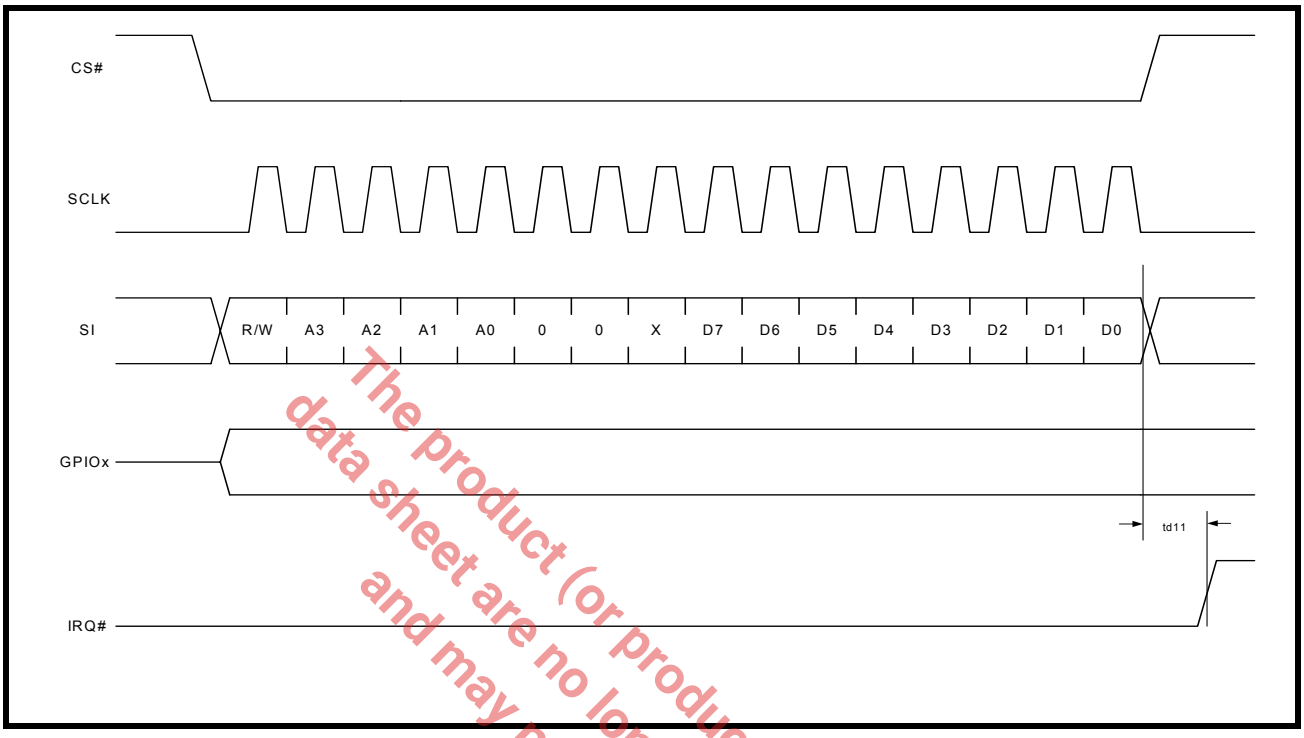

FIGURE 27. READ MSR TO CLEAR MODEM INT

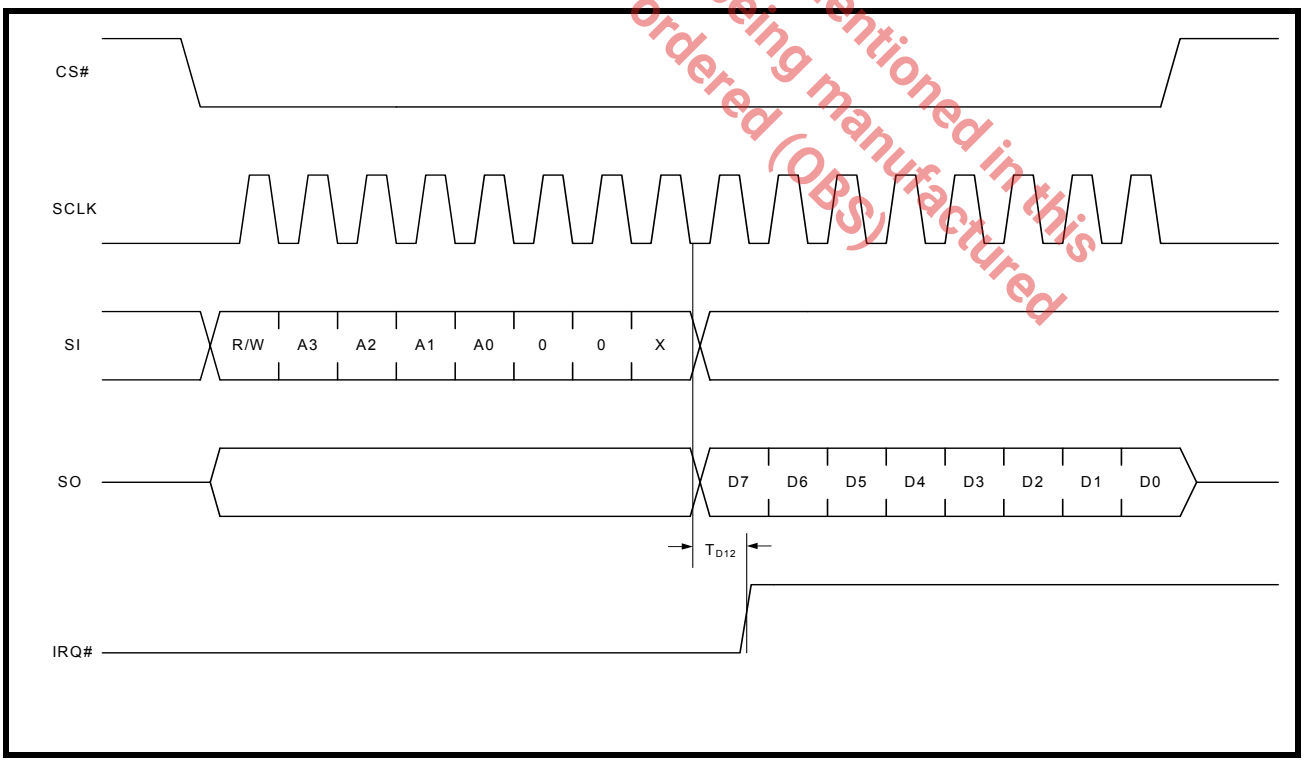

The product (or products) mentioned in this data sheet are no longer being manufactured and may not be ordered (OBS)

FIGURE 28. READ IOSTATE TO CLEAR GPIO INT

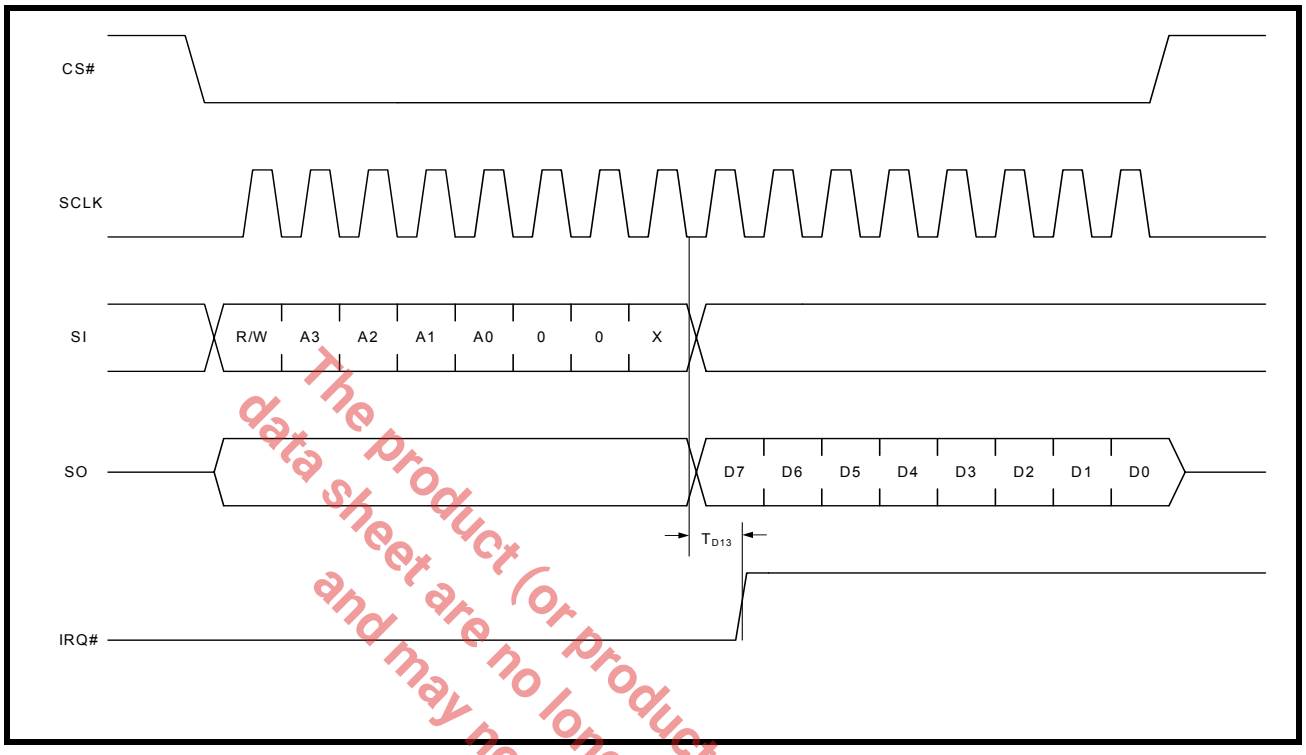

The product (or products) mentioned in this data sheet are no longer being manufactured and may not be ordered (OBS)

FIGURE 29. READ RHR TO CLEAR RX INT

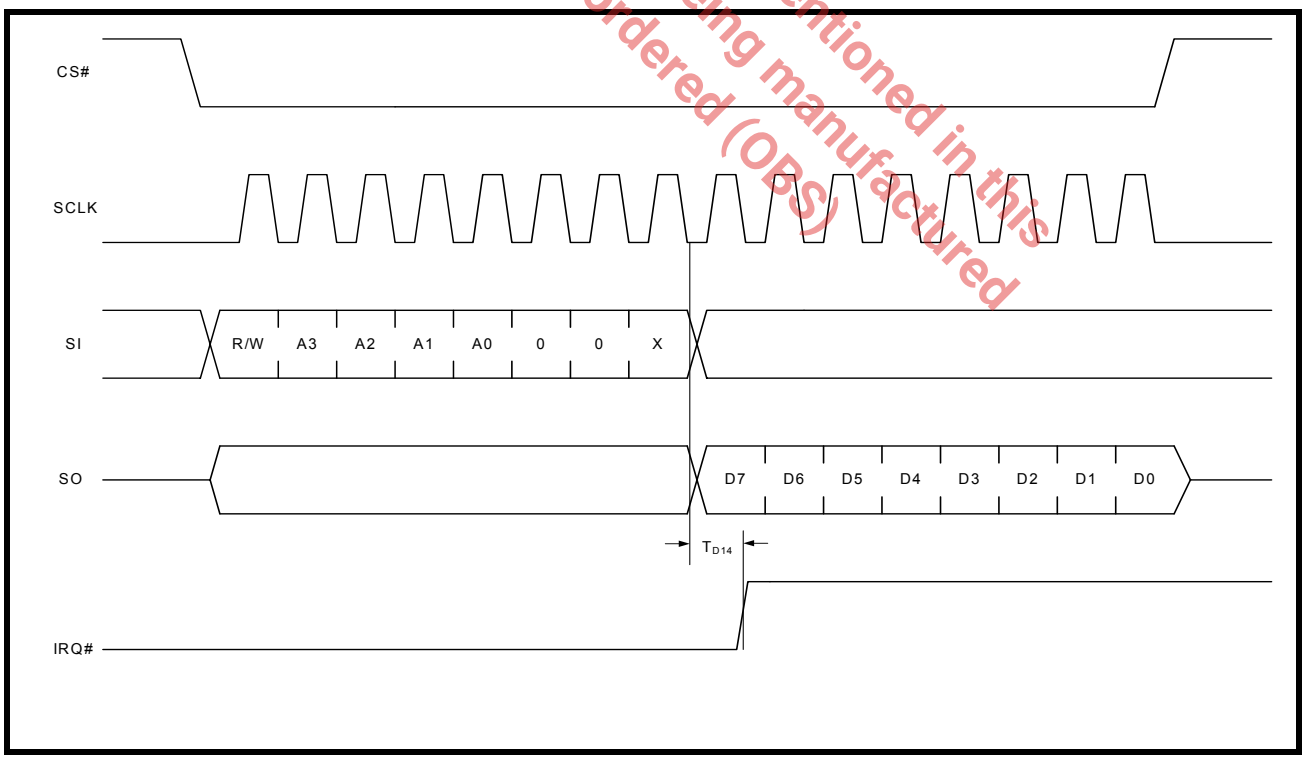

PACKAGE DIMENSIONS (40 PIN QFN - 6 X 6 X 0.9 mm)

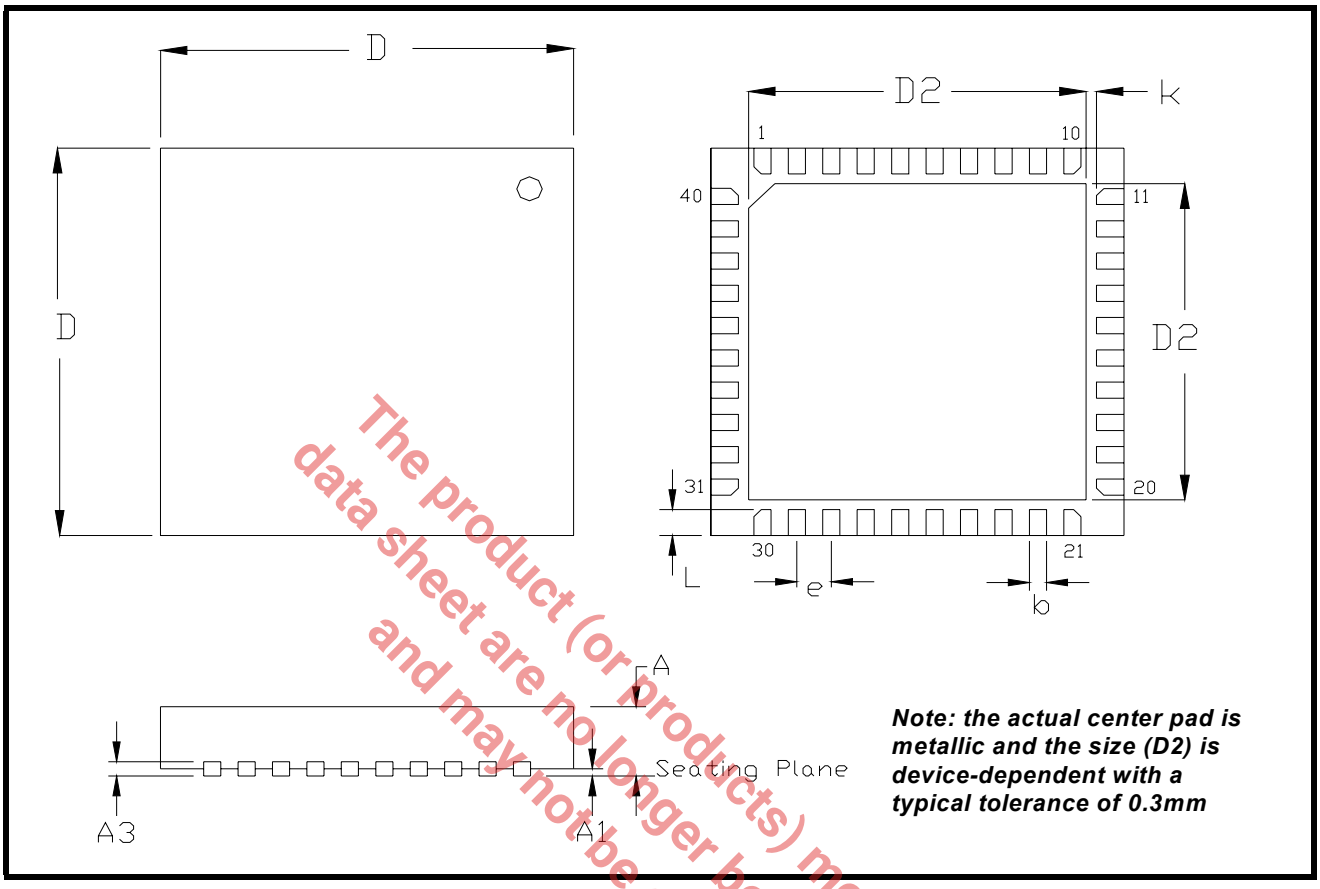

The product (or products) mentioned in this data sheet are no longer being manufactured and may not be ordered (OBS)

Note: The control dimension is in millimeter.

SYMBOL	INCHES		MILLIMETERS	
	MIN	MAX	MIN	MAX
A	0.031	0.039	0.80	1.00
A1	0.000	0.002	0.00	0.05
A3	0.006	0.010	0.15	0.25
D	0.232	0.240	5.90	6.10
D2	0.189	0.197	4.80	5.00
b	0.007	0.012	0.18	0.30
e	0.0197 BSC		0.50 BSC	
L	0.014	0.018	0.35	0.45
k	0.008	-	0.20	-

REVISION HISTORY

DATE	REVISION	DESCRIPTION
October 2006	P1.0.0	Preliminary Datasheet.
December 2006	P1.0.1	Updated Package Drawing and Diagrams. Added I2C/SPI timing diagrams.
January 2007	P1.0.2	Corrected pinout and pin descriptions on pages 2-4.
June 2007	1.0.0	Final Datasheet. Corrected IEC spec # on page 1.
June 2011	1.0.1	Removed “DMA mode” since this is a legacy feature that is not supported in this device. Added and updated maximum SPI clock frequency to the AC Electrical Characteristics table for SPI-Bus Timing. Updated ordering information.

The product (or products) mentioned in this data sheet are no longer being manufactured and may not be ordered (OBS)

NOTICE

EXAR Corporation reserves the right to make changes to the products contained in this publication in order to improve design, performance or reliability. EXAR Corporation assumes no responsibility for the use of any circuits described herein, conveys no license under any patent or other right, and makes no representation that the circuits are free of patent infringement. Charts and schedules contained here in are only for illustration purposes and may vary depending upon a user’s specific application. While the information in this publication has been carefully checked; no responsibility, however, is assumed for inaccuracies.

EXAR Corporation does not recommend the use of any of its products in life support applications where the failure or malfunction of the product can reasonably be expected to cause failure of the life support system or to significantly affect its safety or effectiveness. Products are not authorized for use in such applications unless EXAR Corporation receives, in writing, assurances to its satisfaction that: (a) the risk of injury or damage has been minimized; (b) the user assumes all such risks; (c) potential liability of EXAR Corporation is adequately protected under the circumstances.

Copyright 2011 EXAR Corporation

Datasheet June 2011.

Send your UART technical inquiry with technical details to hotline: uarttechsupport@exar.com.

Reproduction, in part or whole, without the prior written consent of EXAR Corporation is prohibited.