SP334

Programmable RS-232/RS-485 Transceiver

Description

The SP334 is a programmable RS-232 and/or RS-485 transceiver IC. The SP334 contains three drivers and five receivers when selected in RS-232 mode; and two drivers and two receivers when selected in RS-485 mode.

The RS-232 transceivers can typically operate at 230kbps while adhering to the RS-232 specifications. The RS-485 transceivers can operate up to 10Mbps while adhering to the RS-485 specifications. The RS-485 drivers can be disabled (High-Z output) by the TXEN enable pin. The RS-232 and RS-485 receiver outputs can be disabled by the $\overline{RXEN}$ pin.

FEATURES

- +5V Single Supply Operation
- Software Programmable RS-232 or RS-485 Selection
- Three RS-232 Drivers and Five Receivers in RS-232 Mode
- Two RS-485 Full-Duplex Transceivers in RS-485 Mode
- Full Differential Driver Tri-State (Hi-Z) Control
- Receiver Output Tri-State Control

Ordering Information - Back Page

The Product (or products) mentioned in this data sheet are no longer being manufactured and may not be ordered (OBS)

Typical Applications Circuit

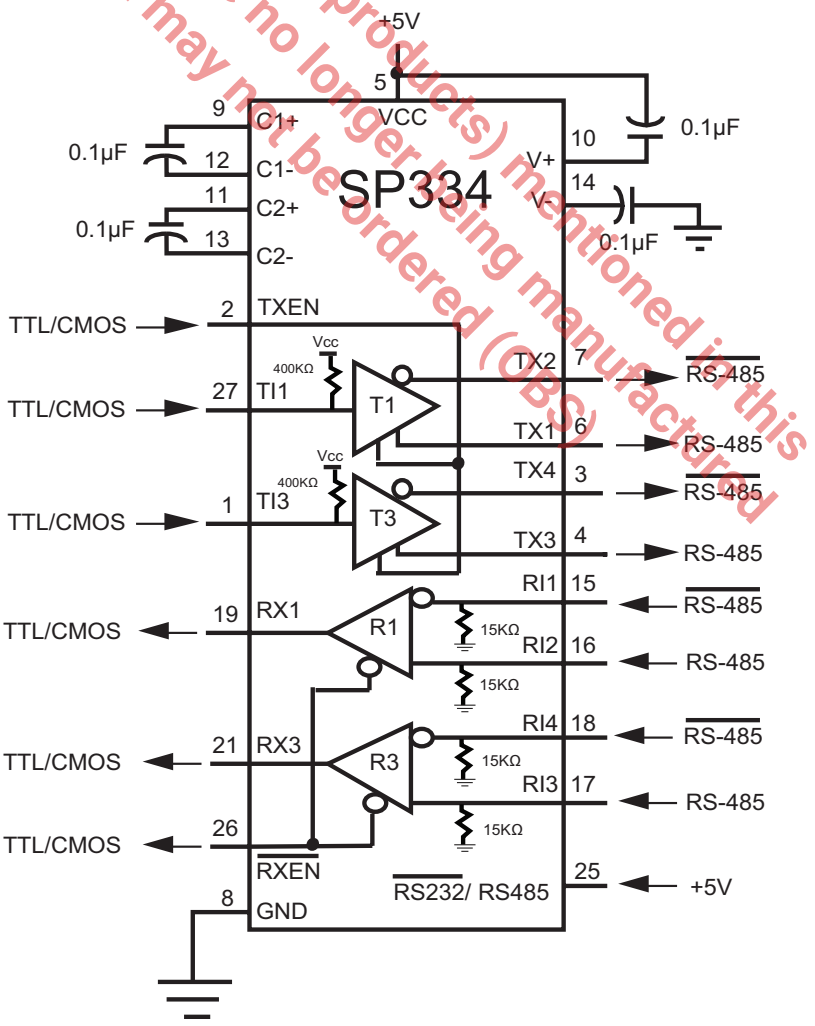

Absolute Maximum Ratings

These are stress ratings only and functional operation of the device at these ratings or any other above those indicated in the operation sections of the specifications below is not implied. Exposure to absolute maximum rating conditions for extended periods of time may affect reliability.

V_{CC} ..... +7V

Input Voltages

Logic ..... -0.5V to (V_{CC} + 0.5V)

Drivers ..... -0.5V to (V_{CC} + 0.5V)

Receivers..... ±30V @ ≤100mA

Driver Outputs ..... ±15V

Maximum Data Rate..... 8Mbps(1)

Storage Temperature ..... -65˚C to +150˚C

Power Dissipation

28-pin WSOIC 1000mW

Package Derating

28-pin WSOIC

Θ_{JA} ..... 40˚C/W

NOTE:

1. Exceeding the maximum data rate of 8Mbps at T_A = 85˚C may permanently damage the device.

The product (or products) mentioned in this data sheet are no longer being manufactured and may not be ordered (OBS)

Electrical Characteristics

Limits are specified at T_A = 25°C and V_{CC} = +5.0V unless otherwise noted.

PARAMETER	MIN.	TYP.	MAX.	UNITS	CONDITIONS
Logic Inputs					
V_{IL}			0.8	V	
V_{IH}	2.0			V	
Logic Outputs					
V_{OL}			0.4	V	I_{OUT} = -3.2mA
V_{OH}	2.4			V	I_{OUT} = 1.0mA
Output Tri-state Leakage		10		µA	0.4V ≤ V_{OUT} ≤ +2.4V
RS-232 Driver					
DC Characteristics					
HIGH Level Output	+5.0		+15.0	V	R_L = 3kΩ, V_{IN} = 0.8V
LOW Level Output	-15.0		-5.0	V	R_L = 3kΩ, V_{IN} = 2.0V
Open Circuit Voltage	-15		+15	V	
Short Circuit Current			±100	mA	V_{OUT} = 0V
Power Off Impedance	300			Ω	V_{CC} = 0V, V_{OUT} = ±2.0V
AC Characteristics					
Slew Rate			30	V/µs	R_L = 3kΩ, C_L = 50pF; V_{CC} = +5.0V, T_A @ 25°C
Transistion Time			1.56	µs	R_L = 3kΩ, C_L = 2500pF; between ±3V, T_A @ +25°C
Maximum Data Rate	120	235		kbps	R_L = 3kΩ, C_L = 2500pF
Propagation Delay t_{PHL}		2	8	µs	Measured from 1.5V of V_{IN} to 50% of V_{OUT}; R_L = 3kΩ
Propagation Delay t_{PLH}		2	8	µs	
RS-232 Receiver					
DC Characteristics					
HIGH Threshold		1.7	3.0	V	
LOW Threshold	0.8	1.2		V	
Receiver Open Circuit Bias			+2.0	V	
Input Impedance	3	5	7	kΩ	V_{IN} = +15V to -15V

Electrical Characteristics (Continued)

Limits are specified at T_A = 25°C and V_{CC} = +5.0V unless otherwise noted.

PARAMETER	MIN.	TYP.	MAX.	UNITS	CONDITIONS
RS-232 Receiver (Continued)					
AC Characteristics					
Maximum Data Rate	120	235		kbps	
Propagation Delay t_{PHL}		0.25	1	µs	Measured from 50% of V_{IN} to 1.5V of V_{OUT}
Propagation Delay t_{PLH}		0.25	1	µs	
RS-485 Driver					
DC Characteristics					
Open Circuit Voltage			6.0	V	
Differential Output	1.5		5.0	V	R_L = 54Ω, C_L = 50pF
Balance			±0.2	V	$\|V_T\| - \|\overline{V_T}\|$
Common-Mode Output			3.0	V	
Output Current	28.0			mA	R_L = 54Ω
Short Circuit Current			±250	mA	Terminated in -7V to +10V
AC Characteristics					
Maximum Data Rate	10			Mbps	R_L = 54Ω
Maximum Data Rate			8	Mbps	R_L = 54Ω , T_A = +85°C(1)
Output Transition Time		30		ns	Rise/Fall time, 10% - 90%
Propagation Delay t_{PHL}		80	120	ns	See Figures 3 & 5, R_{DIFF} = 54Ω, C_{L1} = C_{L2} = 100pF
Propagation Delay t_{PLH}		80	120	ns	
Driver Output Skew		5	20	ns	Per Figure 5, $t_{SKEW} = \|t_{DPHL} - t_{DPLH}\|$
Enable Timing					
Enable Time (see Figures 4 and 6)					
Enable to LOW		100	150	ns	C_L = 15pF, S_1 Closed
Enable to HIGH		100	150	ns	C_L = 15pF, S_2 Closed
Disable Time (see Figures 4 and 6)					
Disable from LOW		100	120	ns	C_L = 15pF, S_1 Closed
Disable from HIGH		100	120	ns	C_L = 15pF, S_2 Closed
RS-485 Receiver					
DC Characteristics					
Common Mode Range	-7.0		+12	V	
Receiver Sensitivity			±0.2	V	-7V ≤ V_{CM} ≤ +12V
Input Impedance	12	15		kΩ	-7V ≤ V_{CM} ≤ +12V
AC Characteristics					
Maximum Data Rate	10			Mbps	
Maximum Data Rate			8	Mbps	T_A = +85°C(1)
Propagation Delay t_{PHL}		130	200	ns	See Figures 3 & 7, R_{DIFF} = 54Ω, C_{L1} = C_{L2} = 100pF
Propagation Delay t_{PLH}		130	200	ns	
Differential Receiver Skew		10	20	ns	$t_{SKEW} = \|t_{PHL} - t_{PLH}\|$, R_{DIFF} = 54Ω, C_{L1} = C_{L2} = 100pF, see Figure 8

The product (or products) mentioned in this data sheet are no longer being manufactured and may not be ordered (OBS)

Electrical Characteristics, Continued

Limits are specified at T_A = 25°C and V_{CC} = +5.0V unless otherwise noted.

PARAMETER	MIN.	TYP.	MAX.	UNITS	CONDITIONS
RS-485 Receiver (Continued)					
Enable Timing					
Enable Time (see Figures 2 and 8)					
Enable to LOW		100	150	ns	C_L = 15pF, S_1 Closed
Enable to HIGH		100	150	ns	C_L = 15pF, S_2 Closed
Disable Time (see Figures 2 and 8)					
Disable from LOW		100	120	ns	C_L = 15pF, S_1 Closed
Disable from HIGH		100	120	ns	C_L = 15pF, S_2 Closed
Power Requirements					
Supply Voltage V_{CC}	+4.75		+5.25	V	
Supply Current I_{CC}					
No Load (T_X Disabled)		12	20	mA	TXEN = 0V
No Load (RS-232 Mode)		20	50	mA	$\overline{\text{RS232}}$/RS485 = 0V
No Load (RS-485 Mode)		15	50	mA	$\overline{\text{RS232}}$/RS485 = +5V
Environmental					
Operating Temperature					
Commercial (_C_)	0		70	ºC	
Industrial (_E_)	-40		+85	ºC	
Storage Temperature	-65		+150	ºC	

NOTE:
1. Exceeding the maximum data rate of 8Mbps at T_A = 85˚C may permanently damage the device.

The product(or products) mentioned in this data sheet are no longer being manufactured and may not be ordered (OBS)

Receiver Input Graph

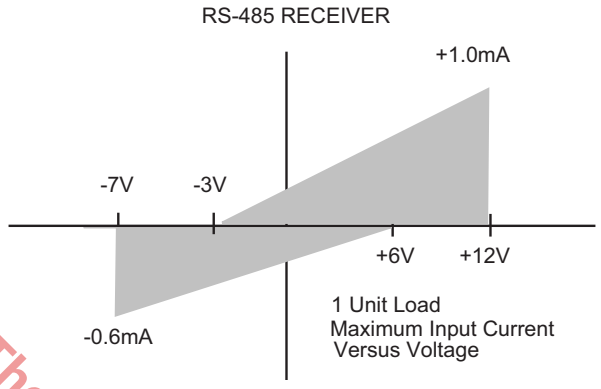

The product (or products) mentioned in this data sheet are no longer being manufactured and may not be ordered (OBS)

Test Circuits

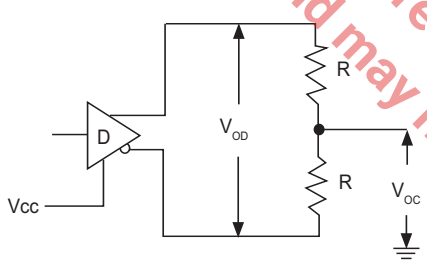

Figure 1. Driver DC Test Load Circuit

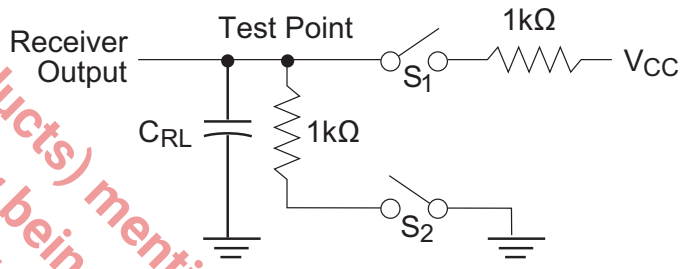

Figure 2. Receiver Timing Test Load Circuit

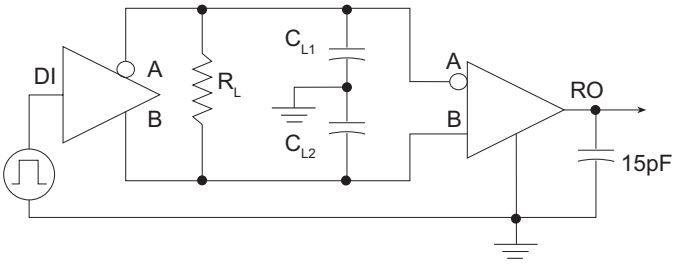

Figure 3. Driver / Receiver Timing Test Circuit

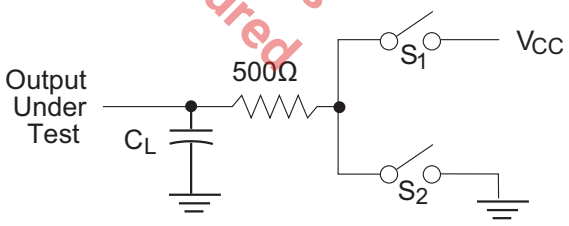

Figure 4. Driver Timing Test Load #2 Circuit

Switching Waveforms

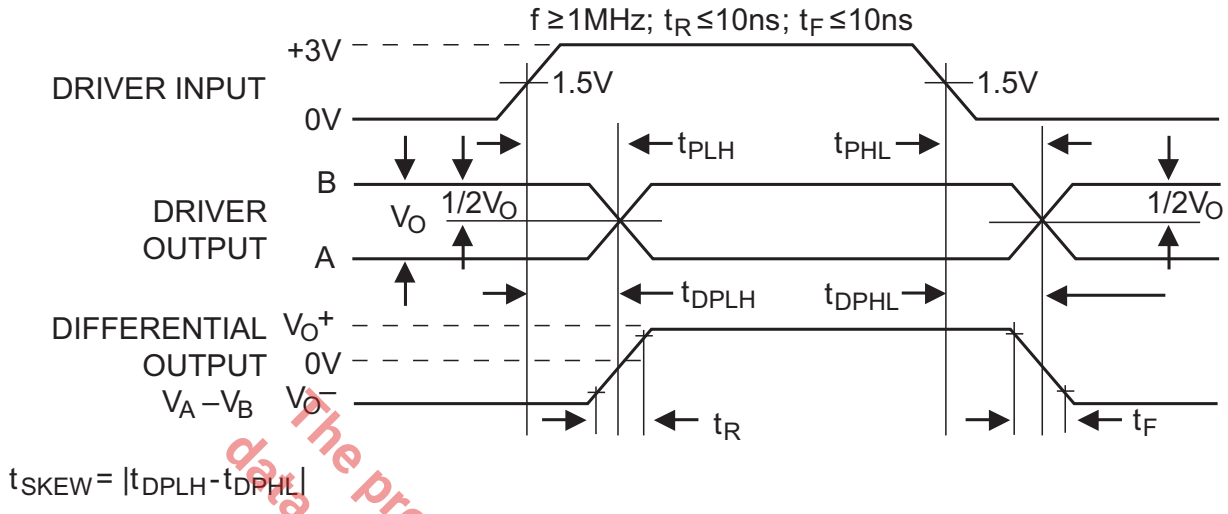

Figure 5. Driver Propagation Delays

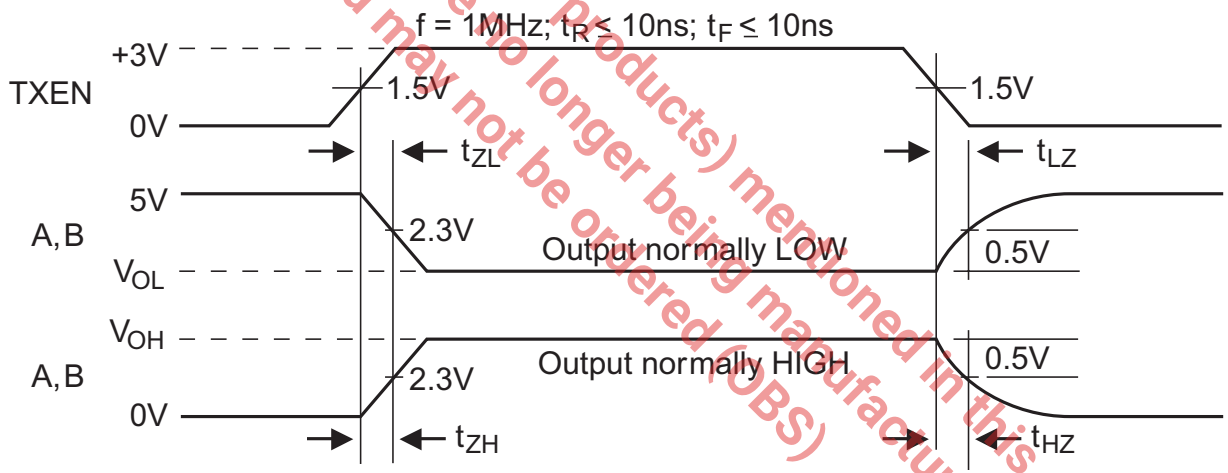

Figure 6. Driver Enable and Disable Times

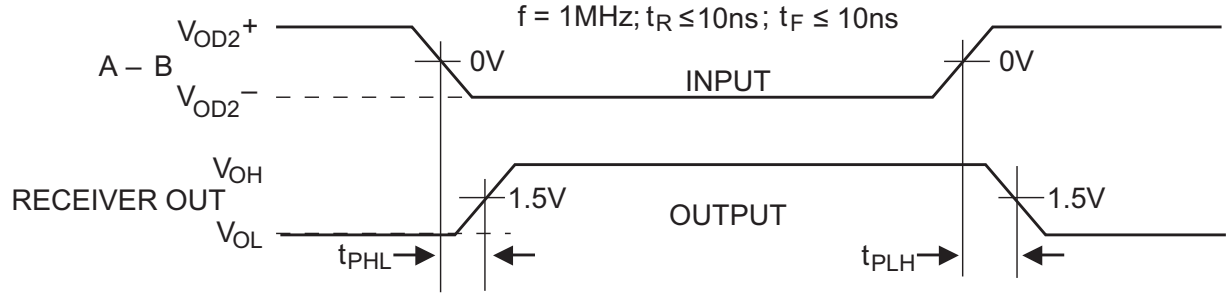

Figure 7. Receiver Propagation Delays

The product (or products) mentioned in this data sheet are no longer being manufactured and may not be ordered (OBS)

Switching Waveforms (Continued)

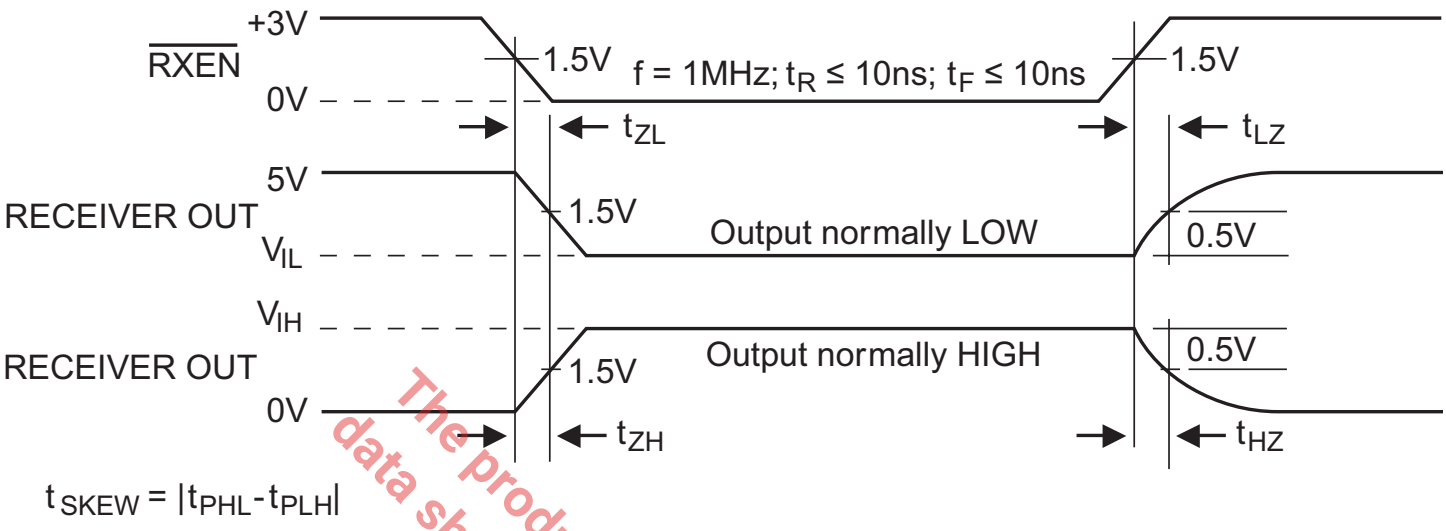

Figure 8. Receiver Enable and Disable Times

The product (or products) mentioned in this data sheet are no longer being manufactured and may not be ordered (OBS)

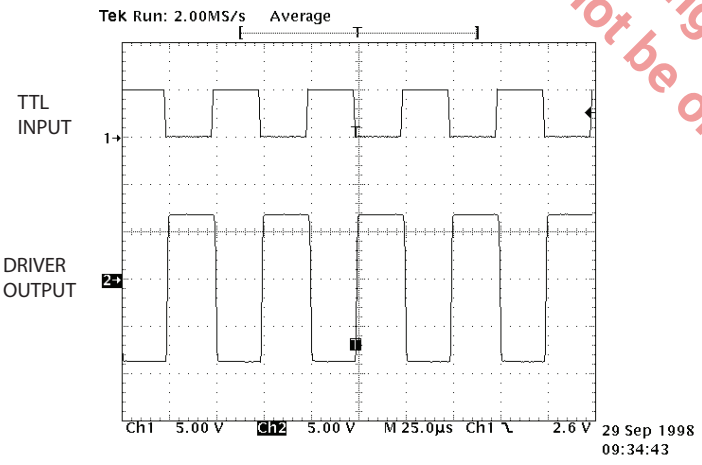

Figure 9. Typical RS-232 Driver Output

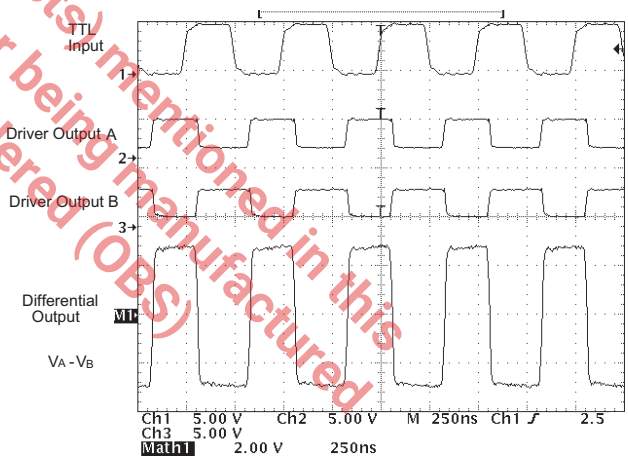

Figure 10. Typical RS-485 Driver Output

Pinout

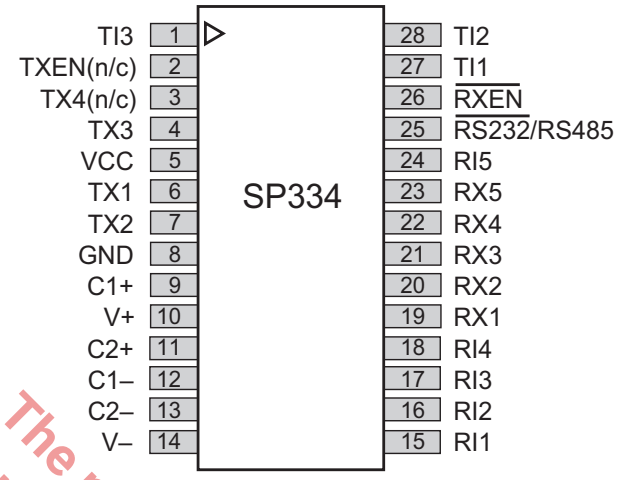

(in RS-232 Mode)

Figure 11. SP334 Pinout

The product (or products) mentioned in this data sheet are no longer being manufactured and may not be ordered (OBS)

Typical Operating Circuits

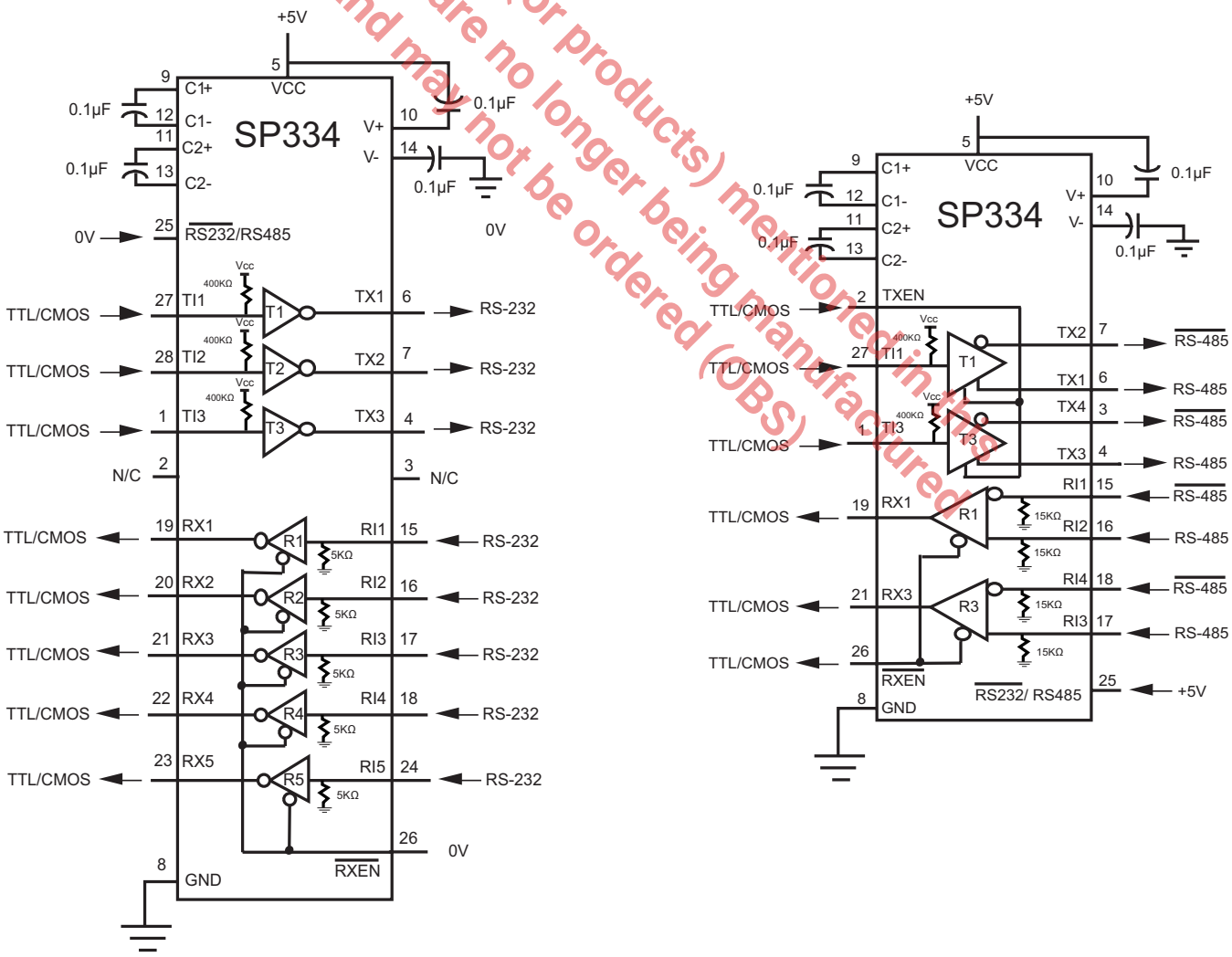

Figure 12. Typical Operating Circuits

Theory of Operation

The SP334 is made up of four separate circuit blocks: the charge pump, drivers, receivers, and decoder. Each of these circuit blocks is described in more detail below.

Charge-Pump

The charge pump is an Exar–patented design (U.S. 5,306,954) and uses a unique approach compared to older less efficient designs. The charge pump still requires four external capacitors, but uses a four-phase voltage shifting technique to attain symmetrical 10V power supplies. Figure 17(a) shows the waveform found on the positive side of capacitor C2, and Figure 17(b) shows the negative side of capacitor C2. There is a free–running oscillator that controls the four phases of the voltage shifting. A description of each phase follows.

Phase 1: V_{SS} Charge Storage

During this phase of the clock cycle, the positive side of capacitors C_1 and C_2 are initially charged to +5V. C_1^+ is then switched to ground and charge on C_1^- is transferred to C_2^-. Since C_2^+ is connected to +5V, the voltage potential across capacitor C_2 is now 10V.

Phase 2: V_{SS} Transfer

Phase two of the clock connects the negative terminal of C_2 to the V_{SS} storage capacitor and the positive terminal of C_2 to ground, and transfers the generated -10V to C_3. Simultaneously, the positive side of capacitor C_1 is switched to +5V and the negative side is connected to ground.

Phase 3: V_{DD} Charge Storage

The third phase of the clock is identical to the first phase; the charge transferred in C_1 produces -5V in the negative terminal of C_1, which is applied to the negative side of capacitor C_2. Since C_2^+ is at +5V, the voltage potential across C_2 is 10V.

Phase 4: V_{DD} Transfer

The fourth phase of the clock connects the negative terminal of C_2 to ground and transfers the generated 10V across C_2 to C_4, the V_{DD} storage capacitor. Again, simultaneously with this, the positive side of capacitor C_1 is switched to +5V and the negative side is connected to ground, and the cycle begins again.

Since both V+ and V^- are separately generated from V_{CC} in a no–load condition, V+ and V^- will be symmetrical. Older charge pump approaches that generate V^- from V+ will show a decrease in the magnitude of V^- compared to V+ due to the inherent inefficiencies in the design.

The clock rate for the charge pump typically operates at 15kHz. The external capacitors must be 0.1µF with a 16V breakdown rating.

External Power Supplies

For applications that do not require +5V only, external supplies can be applied at the V+ and V– pins. The value of the external supply voltages must be no greater than ±10V. The current drain for the ±10V supplies is used for RS-232. For the RS-232 driver the current requirement will be 3.5mA per driver. The external power supplies should provide a power supply sequence of :+10V, then +5V, followed by -10V.

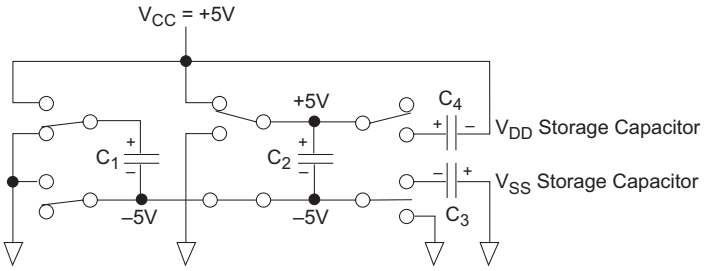

Figure 13. Charge Pump Phase 1

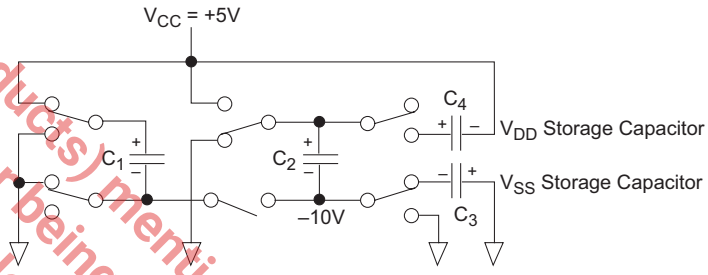

Figure 14. Charge Pump Phase 2

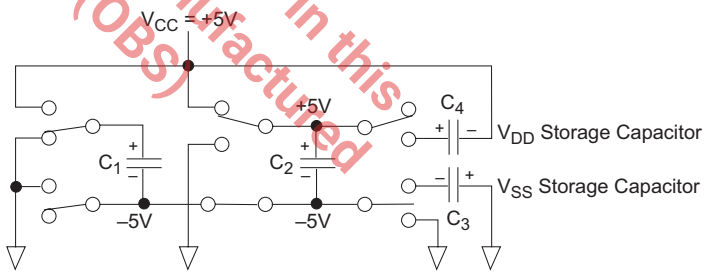

Figure 15. Charge Pump Phase 3

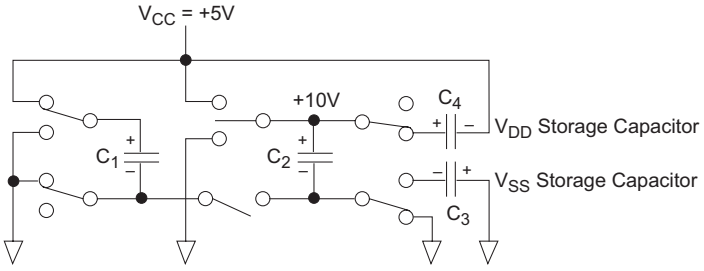

Figure 16. Charge Pump Phase 4

The product (or products) mentioned in this data sheet are no longer being manufactured and may not be ordered (OBS)

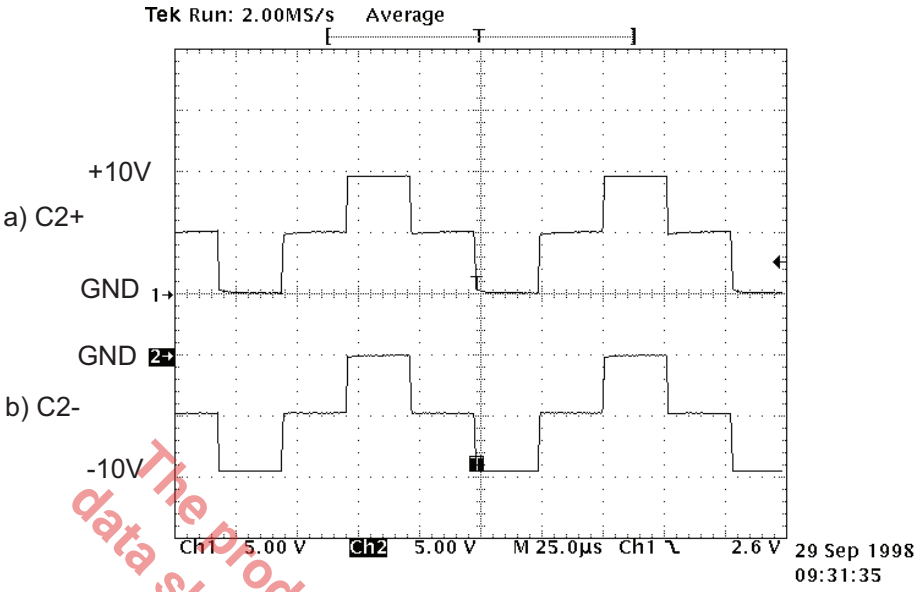

Figure 17. Charge Pump Waveforms

The product (or products) mentioned in this data sheet are no longer being manufactured and may not be ordered (OBS)

Drivers

The SP334 has three independent RS-232 single-ended drivers and two differential RS-485 drivers. Control for the mode selection is done by the $\overline{RS232}$/RS485 select pin. The drivers are pre-arranged such that for each mode of operation the relative position and functionality of the drivers are set up to accommodate the selected interface mode. As the mode of the drivers is changed, the electrical characteristics will change to support the requirements of clock, data, and control line signal levels. Unused driver inputs can be left floating; however, to ensure a desired state with no input signal, pull–up resistors to +5V or pull–down resistors to ground are suggested. Since the driver inputs are both TTL or CMOS compatible, any value resistor less than 100kΩ will suffice.

When in RS-232 mode, the single-ended RS-232 drivers produce compliant RS-232E and ITU V.28 signals. Each of the three drivers output single-ended bipolar signals in excess of ±5V with a full load of 3kΩ and 2500pF applied as specified. These drivers can also operate at least 120kbps.

When programmed to RS-485 mode, the differential RS-485 drivers produce complaint RS-485 signals. Each RS-485 driver outputs a unipolar signal on each output pin with a magnitude of at least 1.5V while loaded with a worst case of 54Ω between the driver's two output pins. The signal levels and drive capability of the RS-485 drivers allow the drivers to also comply with RS-422 levels. The transmission rate for the differential drivers is 10Mbps.

Receivers

The SP334 has five single-ended receivers when programmed for RS-232 mode and two differential receivers when programmed for RS-485 mode.

Control for the mode selection is done the same select pin as in the drivers. As the operating mode of the receivers is changed, the electrical characteristics will change to support the requirements of the appropriate serial standard. Unused receiver inputs can be left floating without causing oscillation. To ensure a desired state of the receiver output, a pull–up resistor of 100kΩ to +5V should be connected to the inverting input for a logic low, or the non–inverting input for a logic high. For single-ended receivers, a pull–down resistor to ground of 5kΩ is internally connected, which will ensure a logic high output.

The RS-232 receiver has a single–ended input with a threshold of 0.8V to 2.4V. The RS-232 receiver has an operating voltage range of ±15V and can receive signals up to 120kbps. RS-232 receivers are used in RS-232 mode for all signal types include data, clock, and control lines of the RS-232 serial port.

The differential RS-485 receiver has an input impedance of 15kΩ and a differential threshold of ±200mV. Since the characteristics of an RS-422 receiver are actually subsets of RS-485, the receivers for RS-422 requirements are identical to the RS-485 receivers. All of the differential receivers can receive data up to 10Mbps.

Enable Pins

The SP334 drivers can be enabled by use of the TXEN pin. A logic HIGH will enable the driver outputs and a logic LOW will tri-state the outputs. The drivers can only be tri-stated in RS-485 mode. The drivers are always active in RS-232 mode.

The Receiver outputs can also be tri-stated by the use of the $\overline{\text{RXEN}}$ pin. A logic LOW will enable the receiver outputs and a logic HIGH will tri-state the outputs. The receiver tri-state capability is offered for both RS-232 and RS-485 modes. The input impedance of the receivers during tri-state is at least 12kΩ.

Applications

The SP334 allows the user flexibility in having a RS-232 or RS-485 serial port without using two different discrete active IC's. Figure 18 shows a connection to a standard DB-9 RS-232 connector. In RS-485 mode, the SP334 is a full duplex transceiver, however, a half duplex configuration can be made by connecting the driver outputs to receiver inputs.

The product(s) mentioned in this data sheet are no longer being manufactured and may not be ordered (OBS)

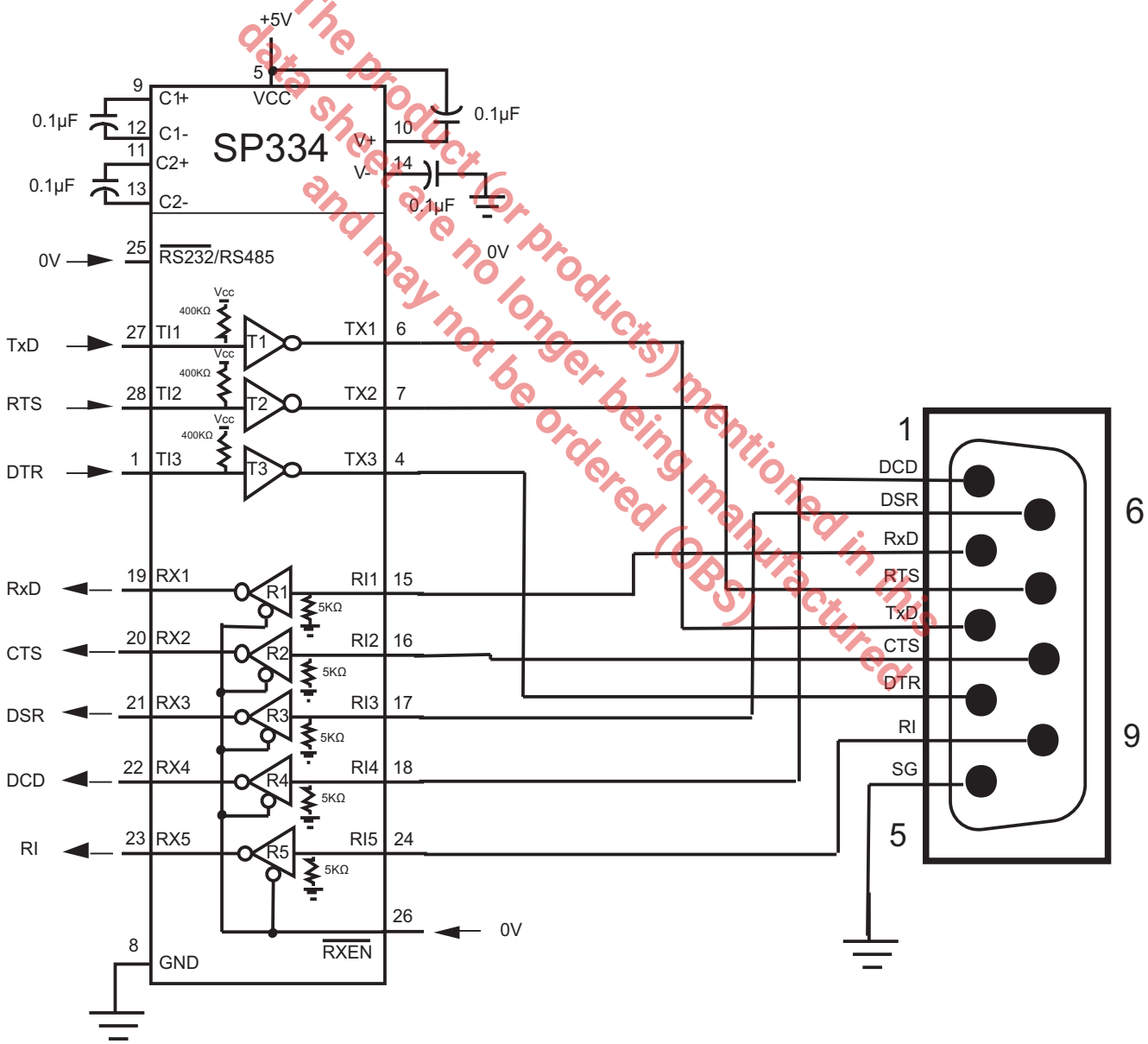

Figure 18. SP334 Configuration to a DB-9 Serial Port

Mechanical Dimensions

WSOIC28

Top View

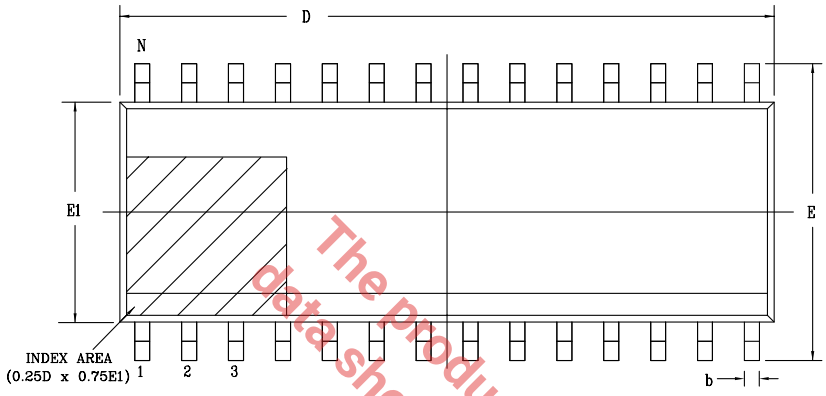

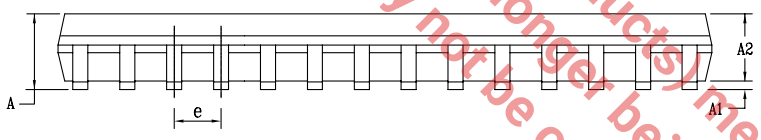

Side View

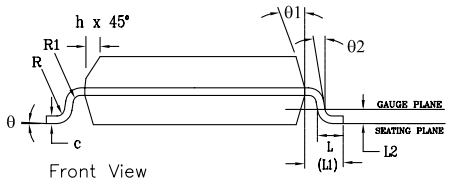

Front View

The product (or products) mentioned in this data sheet are no longer being manufactured and may not be ordered (OBS)

PACKAGE OUTLINE SOIC .300" BODY JEDEC MS-013 VARIATION AE						
SYMBOLS	COMMON DIMENSIONS IN MM (Control Unit)			COMMON DIMENSIONS IN INCHES (Reference Unit)		
	MIN	NOM	MAX	MIN	NOM	MAX
A	2.35	—	2.65	0.093	—	0.104
A1	0.10	—	0.30	0.004	—	0.012
A2	2.05	—	2.55	0.081	—	0.100
b	0.31	—	0.51	0.012	—	0.020
c	0.20	—	0.33	0.008	—	0.013
E	10.30 BSC			0.406 BSC		
E1	7.50 BSC			0.295 BSC		
e	1.27 BSC			0.050 BSC		
h	0.25	—	0.75	0.010	—	0.030
L	0.40	—	1.27	0.016	—	0.050
L1	1.40 REF			0.055 REF		
L2	0.25 BSC			0.010 BSC		
R	0.07	—	—	0.003	—	—
R1	0.07	—	—	0.003	—	—
θ	0°	—	8°	0°	—	8°
θ1	5°	—	15°	5°	—	15°
θ2	0°	—	—	0°	—	—
D	17.90 BSC			0.705 BSC		
N	28					

Drawing No: POD-00000106

Revision: B

Ordering Information[1]

Part Number	Operating Temperature Range	Lead-Free	Package	Packaging Method
SP334CT-L	0°C to 70°C	Yes[2]	28-pin WSOIC	Tube
SP334CT-L/TR				Reel
SP334ET-L	-40°C to 85°C			Tube
SP334ET-L/TR				Reel

NOTE:
1. Refer to www.exar.com/SP334 for most up-to-date Ordering Information.
2. Visit www.exar.com for additional information on Environmental Rating.

Revision History

Revision	Date	Description
2000	SP334/10	Legacy Sipex Datasheet
09/09/09	1.0.0	Convert to Exar Format. Add typical application circuit to page 1 and Revision History table. Remove EOL part numbers and update ordering information per PDN 081126-01. Change revision to 1.0.0. Add Maximum Data Rate to Absolute Maximum Ratings. Add RS-485 Driver and Receiver data rate column for 8Mbps maximum at Tmax and add Note 1.
03/19/18	1.0.1	Update to MaxLinear logo. Update format and ordering information table. RS-485 Enable Timing moved on page 3.

The product(s) mentioned in this data sheet are no longer being manufactured and may not be ordered (OBS)

MAXLINEAR

Corporate Headquarters:
5966 La Place Court
Suite 100
Carlsbad, CA 92008
Tel.:+1 (760) 692-0711
Fax: +1 (760) 444-8598
www.maxlinear.com

High Performance Analog:
1060 Rincon Circle
San Jose, CA 95131
Tel.: +1 (669) 265-6100
Fax: +1 (669) 265-6101
Email: serialtechsupport@exar.com
www.exar.com

The content of this document is furnished for informational use only, is subject to change without notice, and should not be construed as a commitment by MaxLinear, Inc.. MaxLinear, Inc. assumes no responsibility or liability for any errors or inaccuracies that may appear in the informational content contained in this guide. Complying with all applicable copyright laws is the responsibility of the user. Without limiting the rights under copyright, no part of this document may be reproduced into, stored in, or introduced into a retrieval system, or transmitted in any form or by any means (electronic, mechanical, photocopying, recording, or otherwise), or for any purpose, without the express written permission of MaxLinear, Inc.

Maxlinear, Inc. does not recommend the use of any of its products in life support applications where the failure or malfunction of the product can reasonably be expected to cause failure of the life support system or to significantly affect its safety or effectiveness. Products are not authorized for use in such applications unless MaxLinear, Inc. receives, in writing, assurances to its satisfaction that: (a) the risk of injury or damage has been minimized; (b) the user assumes all such risks; (c) potential liability of MaxLinear, Inc. is adequately protected under the circumstances.

MaxLinear, Inc. may have patents, patent applications, trademarks, copyrights, or other intellectual property rights covering subject matter in this document. Except as expressly provided in any written license agreement from MaxLinear, Inc., the furnishing of this document does not give you any license to these patents, trademarks, copyrights, or other intellectual property.

Company and product names may be registered trademarks or trademarks of the respective owners with which they are associated.

© 2009 - 2018 MaxLinear, Inc. All rights reserved