SP385E

Enhanced +3V or +5V RS-232 Line Driver/Receiver

FEATURES

- Operates from 3.3V or 5V Power Supply
- Meets all EIA-232D and V.28 Specifications at 5V.
- Meets EIA-562 Specifications at 3.3V
- Two Drivers and Receivers
- Operates with 0.1µF to 10µF Capacitors
- High data rate - 120kbps Under Load
- Low Power Shutdown ≤ 1µA
- 3-State TTL/CMOS Receiver Outputs
- Low Power CMOS - 5mA Operation
- Improved ESD Specifications:
  ±15kV Human Body Model
  ±15kV IEC61000-4-2 Air Discharge
  ±8kV IEC61000-4-2 Contact Discharge

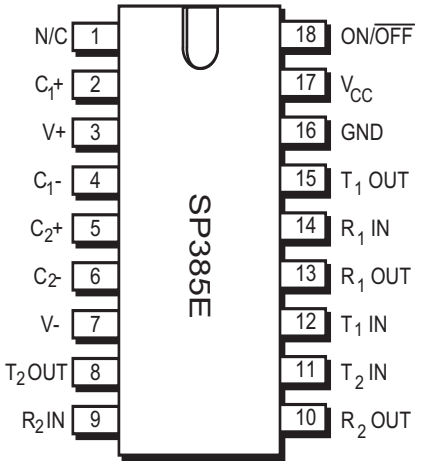

Now Available in Lead Free Packaging

this product (or products) mentioned in this data sheet are no longer being manufactured and may not be ordered (OBS)

DESCRIPTION

Exar's SP385E is an enhanced version of the SP200 family of RS-232 line drivers/receivers. The SP385E offers +3.3V operation for EIA-562 and EIA-232 applications. The SP385E features offered maintains the same performance features offered in its predecessors. The SP385E is available in plastic SOIC or SSOP packages operating over the commercial and industrial temperature ranges. The SP385E is pin compatible to the LTC1385 EIA-562 transceiver with the exception that the drivers are disabled with the ON/$\overline{OFF}$ pin.

TYPICAL APPLICATION CIRCUIT

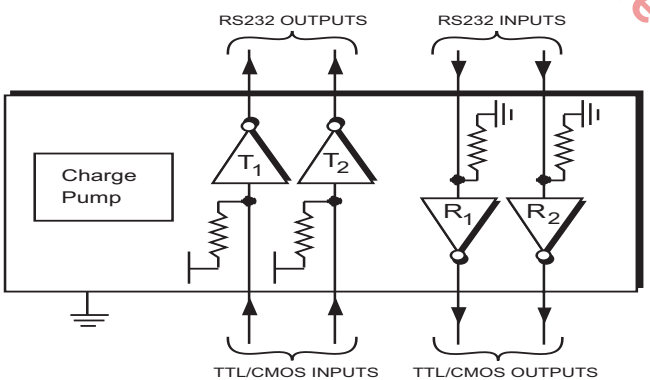

ABSOLUTE MAXIMUM RATINGS

These are stress ratings only and functional operation of the device at these ratings or any other above those indicated in the operation sections of the specifications below is not implied. Exposure to absolute maximum rating conditions for extended periods of time may affect reliability and cause permanent damage to the device.

V_{CC} ..... +6.0V
V+ .....(Vcc-0.3V) to +13.2V
V- ..... -13.2V

Input Voltages
TxIN, ...-0.3V to (Vcc + 0.3V)
RxIN.....±15V
Output Voltages
TxOUT.....(V+, +0.3V) to (V-, -0.3V)
RxOUT.....-0.3V to (V_{CC} +0.3V)
Short-Circuit Duration
TxOUT.....Continuous
Storage Temperature.....-65°C to +150°C

Power Dissipation

20-pin SSOP 750mW
(derate 9.25mW/°C above +70 °C)

18-pin Wide SOIC.....1260mW
(derate 15.7mW/°C above +70 °C)

The product (or products) mentioned in this data sheet are no longer being manufactured and may not be ordered. (OBS)

ELECTRICAL CHARACTERISTICS

V_{CC} = +3.3V ±10%; cap on (V+) and (V-) = 1.0µF, C1 = C2 = 0.1µF; T_{MIN} to T_{MAX} unless otherwise noted.

PARAMETER	MIN.	TYP.	MAX.	UNITS	CONDITIONS
TTL INPUT					
Input Logic Threshold LOW			0.8	V	TxIN, ON/$\overline{OFF}$, Vcc = 3.3V
Input Logic Threshold HIGH	2.0			V	TxIN, ON/$\overline{OFF}$, Vcc = 3.3V
Logic Pullup Current		15	200	µA	T_{IN} = 0V
Maximum Data Rate	120			kbps	C_L = 2500pF, R_L = 3kΩ
TTL OUTPUT					
TTL/CMOS Output Voltage LOW			0.5	V	I_{OUT} = 3.2mA, Vcc = 3.3V
TTL/CMOS Output Voltage HIGH	2.4			V	I_{OUT} = -1.0mA
Leakage Current		±0.05	±10	µA	ON/$\overline{OFF}$ = 0V, 0V ≤ V_{OUT} ≤ Vcc, T_A = 25°C
EIA-562 OUTPUT					
Output Voltage Swing	±3.7	±4.2		V	All transmitter outputs loaded with 3kΩ to GND

ELECTRICAL CHARACTERISTICS

V_{CC} = +3.3V ±10%; cap on (V+) and (V-) = 1.0µF, C1 = C2 = 0.1µF; T_{MIN} to T_{MAX} unless otherwise noted.

PARAMETER	MIN.	TYP.	MAX.	UNITS	CONDITIONS
EIA-562 OUTPUT (continued)					
Power-Off Output Resistance	300			Ω	V_{CC} = 0V, V_{OUT}=±2V
Output Short-Circuit Current		±10		mA	Infinite Duration
EIA-562 INPUT					
Input Voltage Range	-15		15	V	
Input Threshold LOW	0.8	1.2		V	V_{CC} = 3.3V, T_A = +25°C
Input Threshold HIGH		1.7	2.4	V	V_{CC} = 3.3V, T_A = +25°C
Input Hysteresis	0.2	0.5	1.0	V	V_{CC} = 3.3V, T_A = +25°C
Input Resistance	3	5	7	kΩ	V_{IN} = 15V to -15V
DYNAMIC CHARACTERISTICS					
Driver Propagation Delay		4.0		µs	TTL to RS-562
Receiver Propagation Delay		1.5		µs	RS-562 to TTL
Instantaneous Slew Rate			30	V/µs	C_L = 10pF, R_L = 3kΩ - 7kΩ: T_A = +25°C
Transition-Region Slew Rate		10		V/µs	C_L = 2500pF, R_L = 3kΩ; Measured from +2V to -2V or -2V to +2V
Output Enable Time		300		ns	
Output Disable Time		1000		ns	
POWER REQUIREMENTS					
Vcc Power Supply Current		3	6	mA	No load, T_A = +25°C; Vcc = 3.3V
Vcc Power Supply Current			8	mA	All transmitters R_L = 3kΩ, T_A = +25°C
Shutdown Supply Current		0.01	5	µA	Vcc = 3.3V, T_A = +25°C

The product (or products) mentioned in this datasheet are no longer being manufactured and may not be ordered (OBS)

ELECTRICAL CHARACTERISTICS

V_{CC} = +3.3V ±10%; cap on (V+) and (V-) = 1.0µF, C1 = C2 = 0.1µF; T_{MIN} to T_{MAX} unless otherwise noted.

PARAMETER	MIN.	TYP.	MAX.	UNITS	CONDITIONS
TTL INPUT					
Input Logic Threshold LOW			0.8	V	TxIN, ON/$\overline{OFF}$
Input Logic Threshold HIGH	2.0			V	TxIN, ON/$\overline{OFF}$
Logic Pullup Current		15	200	µA	T_{IN} = 0V
Maximum Data Rate	120			kbps	C_L = 2500pF, R_L = 3kΩ
TTL OUTPUT					
TTL/CMOS Output Voltage LOW			0.4	V	I_{OUT} = 3.2mA, Vcc = 5.0V
TTL/CMOS Output Voltage HIGH	3.5			V	I_{OUT} = -1.0mA, Vcc = 5.0V
Leakage Current		±0.05	±10	µA	ON/$\overline{OFF}$ = 0V, 0V ≤ V_{OUT} ≤ Vcc, T_A = 25°C
EIA-232 OUTPUT					
Output Voltage Swing	±5.0	±9		V	All transmitter outputs loaded with 3kΩ to GND
Power-Off Output Resistance	300			Ω	V_{CC} = 0V, V_{OUT}=±2V
Output Short-Circuit Current		±18		mA	Infinite Duration
EIA-232 INPUT					
Input Voltage Range	-15		15	V	
Input Threshold LOW	0.8	1.2		V	V_{CC} = 5V, T_A = +25°C
Input Threshold HIGH		1.7	2.4	V	V_{CC} = 5V, T_A = +25°C
Input Hysteresis	0.2	0.5	1.0	V	V_{CC} = 5V, T_A = +25°C
Input Resistance	3	5	7	kΩ	V_{IN} = 15V to -15V
DYNAMIC CHARACTERISTICS					
Propagation Delay		1.5		µs	RS-232 to TTL
Instantaneous Slew Rate			30	V/µs	C_L = 10pF, R_L = 3kΩ - 7kΩ; T_A = +25°C
Transition-Region Slew Rate		10		V/µs	CL = 2500pF, R_L = 3kΩ; Measured from +3V to -3V or -3V to +3V
Output Enable Time		400		ns	
Output Disable Time		250		ns	
POWER REQUIREMENTS					
Vcc Power Supply Current		10	15	mA	No load, T_A = +25°C; Vcc = 5V
Vcc Power Supply Current		25		mA	All transmitters R_L = 3kΩ, T_A = +25°C
Shutdown Supply Current		1	10	µA	Vcc = 5V, T_A = +25°C

The product (or products) mentioned in this data sheet are no longer being manufactured and may not be ordered (OBS)

TYPICAL PERFORMANCE CHARACTERISTICS

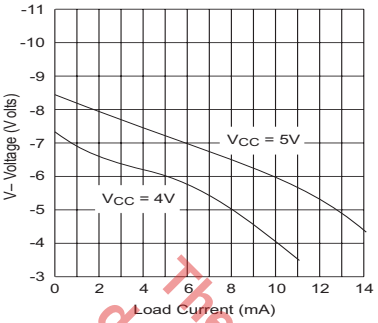

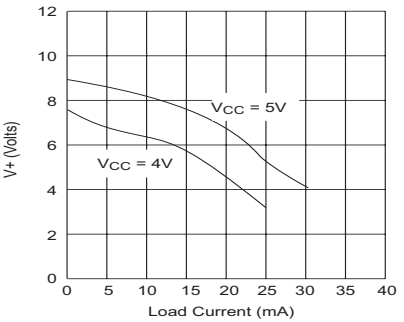

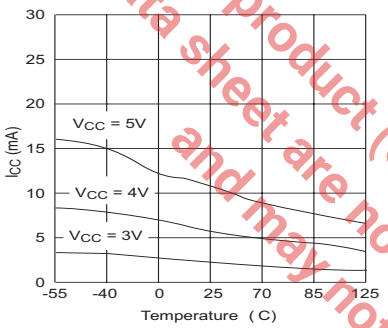

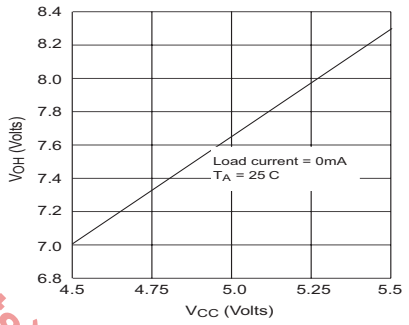

The product (or products) mentioned in this data sheet are no longer being manufactured and may not be ordered (OBS)

PINOUT

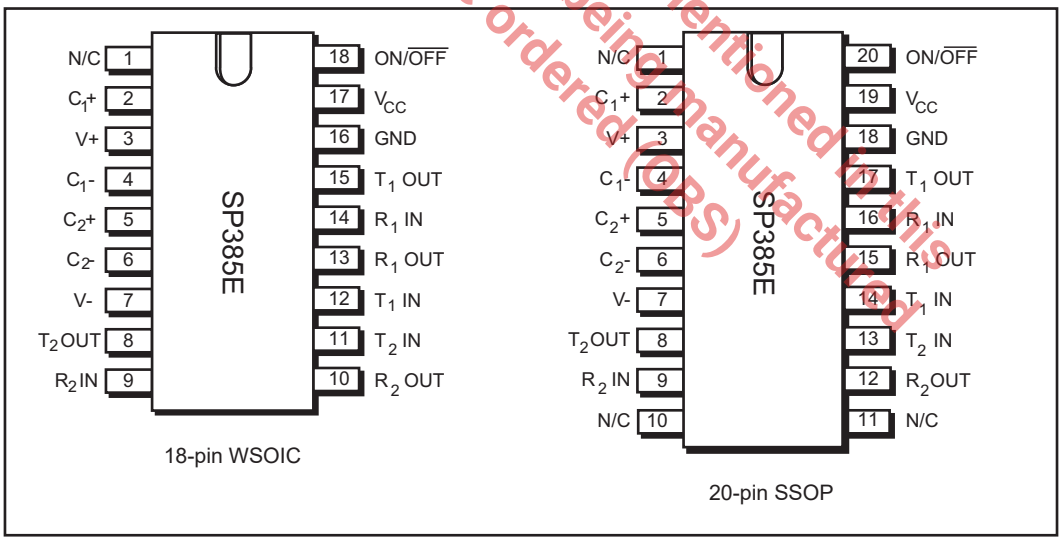

TYPICAL OPERATING CIRCUIT

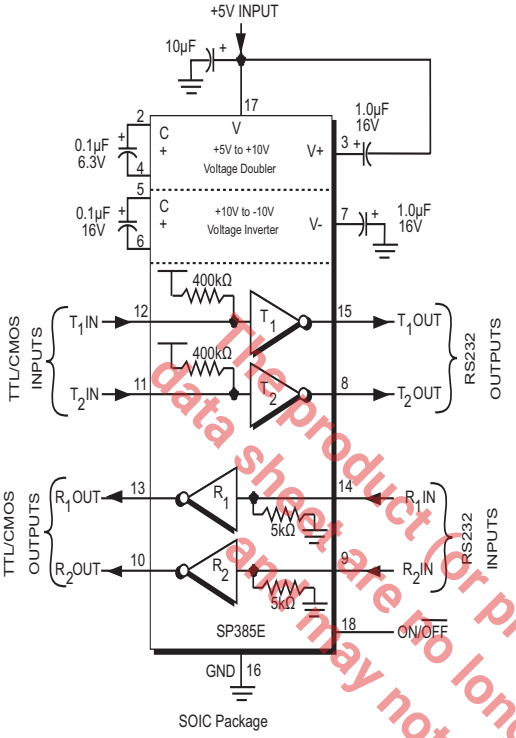

SOIC Package

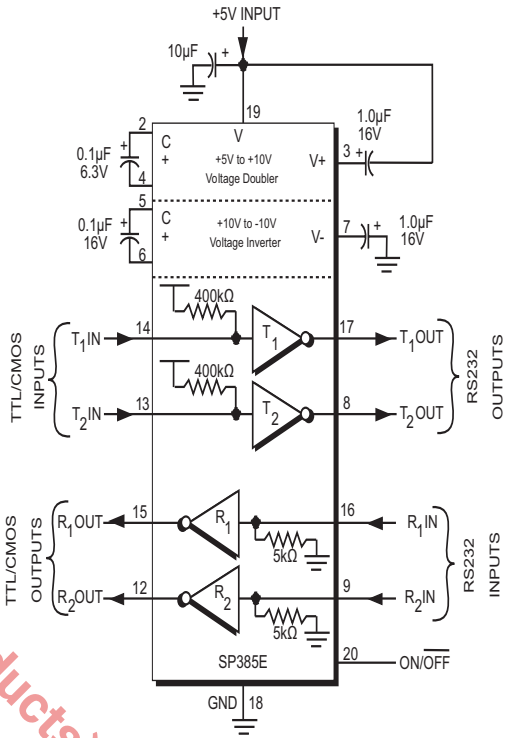

SSOP Package

The product (or products) mentioned in this data sheet are no longer being manufactured and may not be ordered (OBS)

FEATURES

The Exar **SP385E** is a +3V or +5V EIA-232/ EIA-562 line transceiver. It is a pin-for-pin alternative for the SP310A and will operate in the same socket with capacitors ranging from 0.1µF to 10µF, either polarized or non–polarized, in +3V supplies. The **SP385E** offers the same features such as 120kbps guaranteed transmission rate, increased drive current for longer and more flexible cable configurations, low power dissipation and overall ruggedized construction for commercial and industrial environments. The **SP385E** also includes a shutdown feature that tri-states the drivers and the receivers.

The **SP385E** includes a charge pump voltage converter which allows it to operate from a single +3.3V or +5V supply. These converters double the V_{CC} voltage input in order to generate the EIA-232 or EIA-562 output levels. For +5V operation, the **SP385E** driver outputs adhere to all EIA-232D and CCITT V.28 specifications. While at +3.3V operation, the outputs adhere to EIA-562 specifications. Due to Exar's efficient charge pump design, the charge pump levels and the driver outputs are less noisy than other 3V EIA-232 transceivers.

The **SP385E** has a single control line which simultaneously shuts down the internal DC/DC converter and puts all transmitter and receiver outputs into a high impedance state.

The **SP385E** is available in 18-pin plastic SOIC and 20-pin plastic SSOP packages for operation over commercial and industrial temperature ranges. Please consult the factory for surface-mount packaged parts supplied on tape-on-reel as well as parts screened to MIL-M-38510.

The **SP385E** is ideal for +3.3V battery applications requiring low power operation. The charge pump strength allows the drivers to provide ±4.0V signals, plenty for typical EIA-232 applications since the EIA-232 receivers have input sensitivity levels of less than ±3V.

THEORY OF OPERATION

The **SP385E** device is made up of three basic circuit blocks — 1) a driver/transmitter, 2) a receiver and 3) a charge pump.

Driver/Transmitter

The drivers are inverting transmitters, which accept TTL or CMOS inputs and output the RS-232 signals with an inverted sense relative to the input logic levels. Typically the RS-232 output voltage swing is ±9V for 5V supply and ±4.2V for 3.3V supply. Even under worst case loading conditions of 3kΩ and 2500pF, the output is guaranteed to be ±5V for a 5V supply and ±3.7V for a 3.3V supply which adheres to EIA-232 and EIA-562 specifications, respectively. The transmitter outputs are protected against infinite short-circuits to ground without degradation in reliability.

The instantaneous slew rate of the transmitter output is internally limited to a maximum of 30V/µs in order to meet the standards [EIA 232-D 2.1.7, Paragraph (5)]. However, the transition region slew rate of these enhanced products is typically 10V/µs. The smooth transition of the loaded output from VOL to VOH clearly meets the monotonicity requirements of the standard [EIA 232-D 2.1.7, Paragraphs (1) & (2)].

Receivers

The receivers convert RS-232 input signals to inverted TTL signals. Since the input is usually from a transmission line, where long cable lengths and system interference can degrade the signal, the inputs have a typical hysteresis margin of 500mV. This ensures that the receiver is virtually immune to noisy transmission lines.

The input thresholds are 0.8V minimum and 2.4V maximum, again well within the ±3V RS-232 requirements. The receiver inputs are also protected against voltages up to ±15V. Should an input be left unconnected, a 5kΩ pull-down resistor to ground will commit the output of the receiver to a high state.

In actual system applications, it is quite possible for signals to be applied to the receiver inputs before power is applied to the receiver circuitry. This occurs for example when a PC user attempts to print only to realize the printer wasn't turned on. In this case an RS-232 signal from the PC will appear on the receiver input at the printer. When the printer power is turned on, the receiver will operate normally. All of these enhanced devices are fully protected.

The product(s) mentioned in this data sheet are no longer being manufactured and may not be ordered (OBS)

Charge Pump

The charge pump is a Exar–patented design (5,306,954) and uses a unique approach compared to older less–efficient designs. The charge pump still requires four external capacitors, but uses a four–phase voltage shifting technique to attain symmetrical 10V power supplies. There is a free–running oscillator that controls the four phases of the voltage shifting. A description of each phase follows.

Phase 1

— V_{SS} charge storage —During this phase of the clock cycle, the positive side of capacitors C1 and C2 are initially charged to +5V. Cl+ is then switched to ground and the charge in C1– is transferred to C2–. Since C2+ is connected to +5V, the voltage potential across capacitor C2 is now 10V.

Phase 2

— V_{SS} transfer — Phase two of the clock connects the negative terminal of C2 to the V_{SS} storage capacitor and the positive terminal of C2 to ground, and transfers the generated –l0V to C3. Simultaneously, the positive side of capacitor C 1 is switched to +5V and the negative side is connected to ground.

Phase 3

— V_{DD} charge storage — The third phase of the clock is identical to the first phase — the charge transferred in C1 produces –5V in the negative terminal of C1, which is applied to the negative side of capacitor C2. Since C2+ is at +5V, the voltage potential across C2 is l0V.

Phase 4

— V_{DD} transfer — The fourth phase of the clock connects the negative terminal of C2 to ground, and transfers the generated l0V across C2 to C4, the V_{DD} storage capacitor. Again, simultaneously with this, the positive side of capacitor C1 is switched to +5V and the negative side is connected to ground, and the cycle begins again.

Since both V+ and V– are separately generated from V_{CC}; in a no–load condition V+ and V– will be symmetrical. Older charge pump approaches that generate V– from V+ will show a decrease in the magnitude of V– compared to V+ due to the inherent inefficiencies in the design.

The clock rate for the charge pump typically operates at 15kHz. The external capacitors can be as low as 0.1µF with a 16V breakdown voltage rating.

The product (or products) mentioned in this datasheet are no longer being manufactured and may not be ordered (OBS)

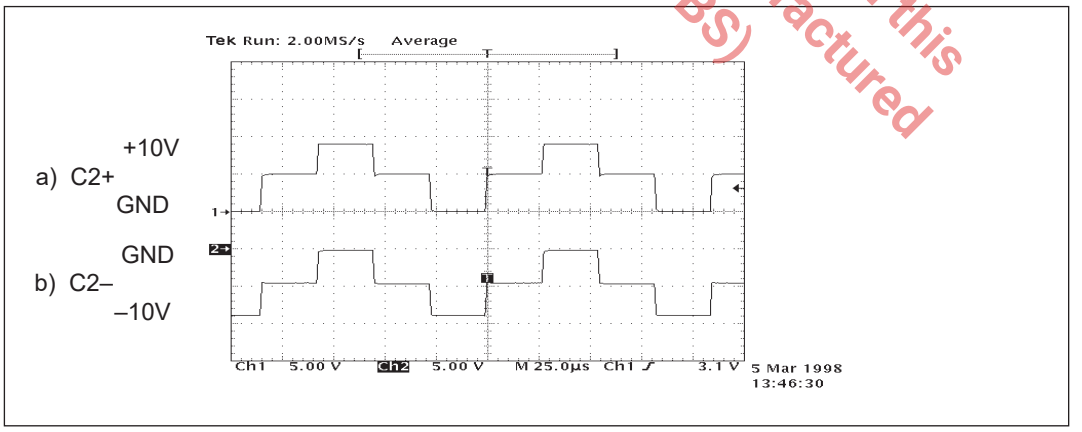

Figure 1. Charge Pump Waveform

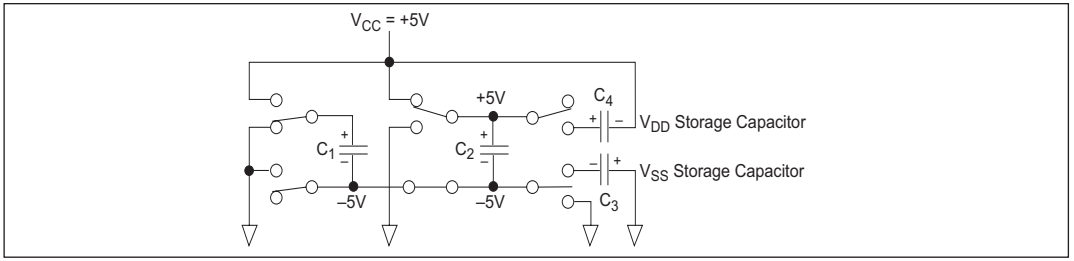

Figure 2. Charge Pump — Phase 1

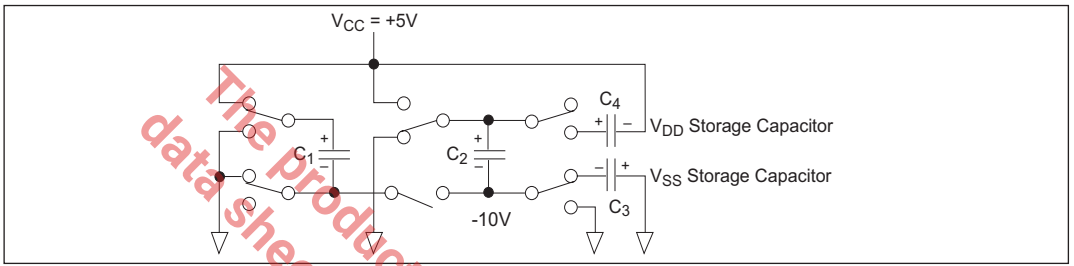

Figure 3. Charge Pump — Phase 2

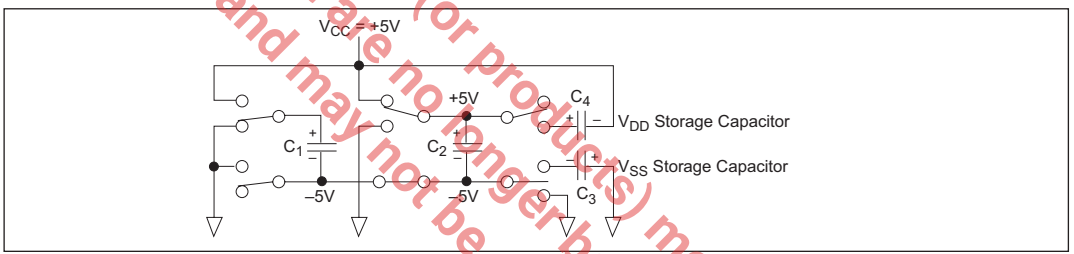

Figure 4. Charge Pump — Phase 3

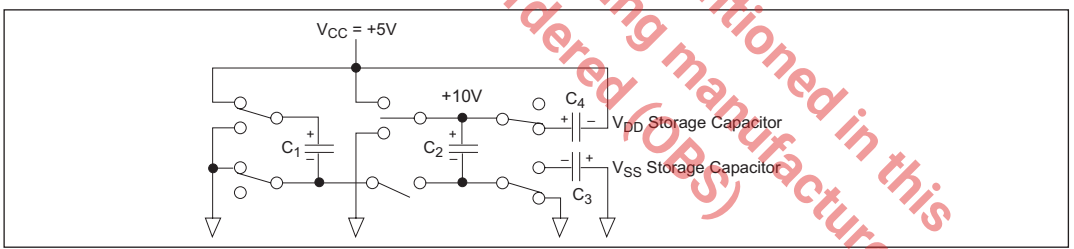

Figure 5. Charge Pump — Phase 4

The product (or products) mentioned in this data sheet are no longer being manufactured and may not be ordered (OBS)

Shutdown (ON/$\overline{\text{OFF}}$)

The **SP385E** has a shut-down/standby mode to conserve power in battery-powered systems. To activate the shutdown mode, which stops the operation of the charge pump, a logic "0" is applied to the appropriate control line. The shut-down mode is controlled on the **SP385E** by a logic "0" on the ON/$\overline{\text{OFF}}$ control line (pin 18 for the SOIC and pin 20 for the SSOP packages); this puts the transmitter outputs in a tri-state mode.

ESD TOLERANCE

The SP385E device incorporates ruggedized ESD cells on all driver output and receiver input pins. The ESD structure is improved over our previous family for more rugged applications and environments sensitive to electro-static discharges and associated transients. The improved ESD tolerance is at least ±15kV without damage nor latch-up.

There are different methods of ESD testing applied:

a) MIL-STD-883, Method 3015.7
b) IEC61000-4-2 Air-Discharge
c) IEC61000-4-2 Direct Contact

The Human Body Model has been the generally accepted ESD testing method for semi-conductors. This method is also specified in MIL-STD-883, Method 3015.7 for ESD testing. The premise of this ESD test is to simulate the human body's potential to store electro-static energy and discharge it to an integrated circuit. The simulation is performed by using a test model as shown in Figure 6. This method will test the IC's capability to withstand an ESD transient during normal handling such as in manufacturing areas where the IC's tend to be handled frequently.

The IEC-61000-4-2, formerly IEC801-2, is generally used for testing ESD on equipment and systems. For system manufacturers, they must guarantee a certain amount of ESD protection since the system itself is exposed to the outside environment and human presence. The premise with IEC61000-4-2 is that the system is required to withstand an amount of static electricity when ESD is applied to points and surfaces of the equipment that are accessible to personnel during normal usage. The transceiver IC receives most of the ESD current when the ESD source is applied to the connector pins. The test circuit for IEC61000-4-2 is shown on Figure 7. There are two methods within IEC61000-4-2, the Air Discharge method and the Contact Discharge method.

With the Air Discharge Method, an ESD voltage is applied to the equipment under test (EUT) through air. This simulates an electrically charged person ready to connect a cable onto the rear of the system only to find an unpleasant zap just before the person touches the back panel. The high energy potential on the person discharges through an arcing path to the rear panel of the system before he or she even touches the system. This energy, whether discharged directly or through air, is predominantly a function of the discharge current rather than the discharge voltage. Variables with an air discharge such as approach speed of the object carrying the ESD potential to the system and humidity will tend to change the discharge current. For example, the rise time of the discharge current varies with the approach speed.

The Contact Discharge Method applies the ESD current directly to the EUT. This method was devised to reduce the unpredictability of the ESD arc. The discharge current rise time is constant since the energy is directly transferred without the air-gap arc. In situations such as hand held systems, the ESD charge can be directly discharged to the equipment from a person already holding the equipment. The current is transferred on to the keypad or the serial port of the equipment directly and then travels through the PCB and finally to the IC.

The product(or products) mentioned in this data sheet are no longer in manufactured and may not be ordered (OBS)

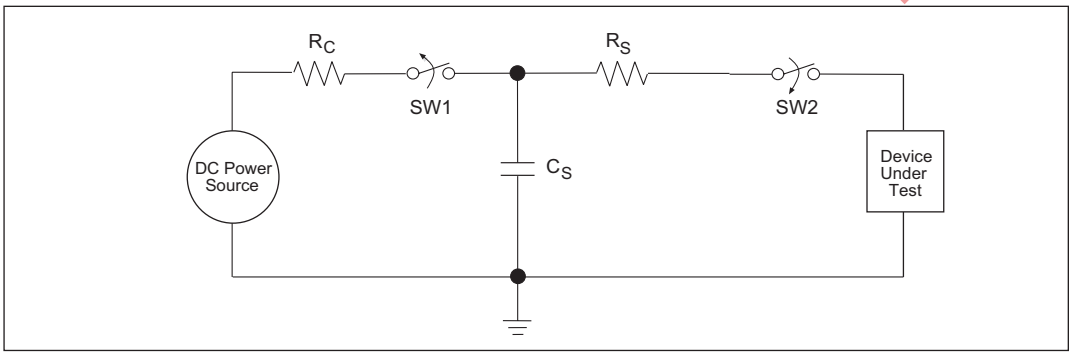

Figure 6. ESD Test Circuit for Human Body Model

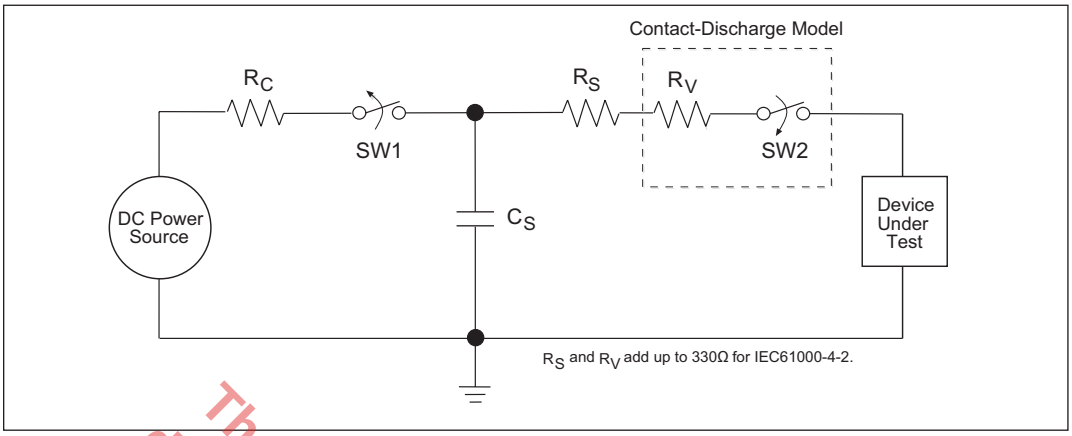

Figure 7. ESD Test Circuit for IEC61000-4-2

The product(s) mentioned in this data sheet are no longer being manufactured and may not be ordered (OBS)

The circuit models in Figures 6 and 7 represent the typical ESD testing circuit used for all three methods. The C_S is initially charged with the DC power supply when the first switch (SW1) is on. Now that the capacitor is charged, the second switch (SW2) is on while SW1 switches off. The voltage stored in the capacitor is then applied through R_S, the current limiting resistor, onto the device under test (DUT). In ESD tests, the SW2 switch is pulsed so that the device under test receives a duration of voltage.

For the Human Body Model, the current limiting resistor (R_S) and the source capacitor (C_S) are 1.5kΩ an 100pF, respectively. For IEC-61000-4-2, the current limiting resistor (R_S) and the source capacitor (C_S) are 330Ω an 150pF, respectively.

The higher C_S value and lower R_S value in the IEC61000-4-2 model are more stringent than the Human Body Model. The larger storage capacitor injects a higher voltage to the test point when SW2 is switched on. The lower current limiting resistor increases the current charge onto the test point.

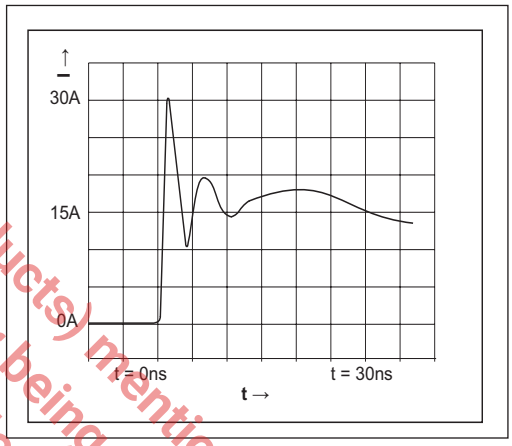

Figure 8. ESD Test Waveform for IEC61000-4-2

DEVICE PIN TESTED	HUMAN BODY MODEL	IEC61000-4-2		
		Air Discharge	Direct Contact	Level
Driver Outputs	±15kV	±15kV	±8kV	4
Receiver Inputs	±15kV	±15kV	±8kV	4

Table 1. Transceiver ESD Tolerance Levels

REVISION HISTORY			
REV.	DISCRIPTION	DATE	APP'D
A	DRAWING ORIGINATION	04/24/06	JL
B	ADD LAND PATTERN RECOMMENDATION	07/25/07	JL
C	CHANGE DRAWING LOGO AND COMPANY NAME	11/21/07	JL

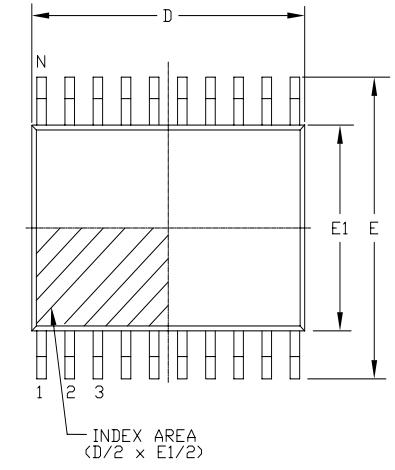

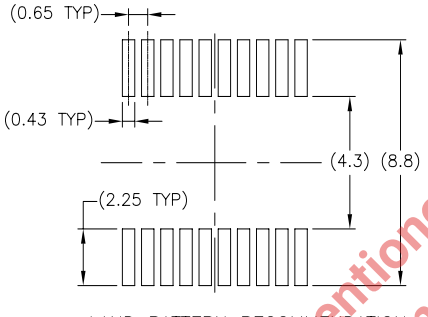

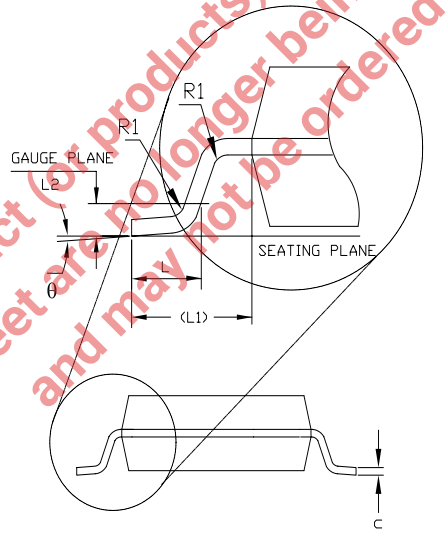

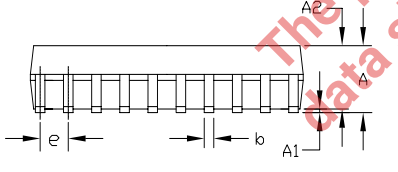

The product (or products) mentioned in this data sheet are no longer being manufactured and may not be ordered (OBS).

20 Pin SSOP JEDEC MO-150 Variation AE						
SYMBOLS	DIMENSIONS IN MM (Control Unit)			DIMENSIONS IN INCH (Reference Unit)		
	MIN	NOM	MAX	MIN	NOM	MAX
A	—	—	2.00	—	—	0.079
A1	0.05	—	—	0.002	—	—
A2	1.65	1.75	1.85	0.065	0.069	0.073
b	0.22	—	0.38	0.009	—	0.015
c	0.09	—	0.25	0.004	—	0.010
E	7.40	7.80	8.20	0.291	0.307	0.323
E1	5.00	5.30	5.60	0.197	0.209	0.220
e	0.65 BSC			0.026 BSC		
L	0.55	0.75	0.95	0.022	0.030	0.037
L1	1.25 REF			0.049 REF		
L2	0.25 BSC			0.010 BSC		
R1	0.09	—	—	0.004	—	—
θ	0°	4°	8°	0°	4°	8°
D	6.90	7.20	7.50	0.272	0.283	0.295
N	20			20		

EXAR Powering Connectivity

EXAR CORPORATION

20 PIN SSOP PACKAGE OUTLINE

Packaging Approval:		Drawing No: 20-PIN SSOP	
By: JL	Date: 11/21/07	Revision: C	Sheet: 1 OF 1

18 pin WSOIC version is obsolete

REVISION HISTORY			
REV.	DISCRIPTION	DATE	APP'D
A	DRAWING ORIGINATION	04/24/06	JL
B	CHANGE DRAWING LOGO AND COMPANY NAME	11/21/07	JL

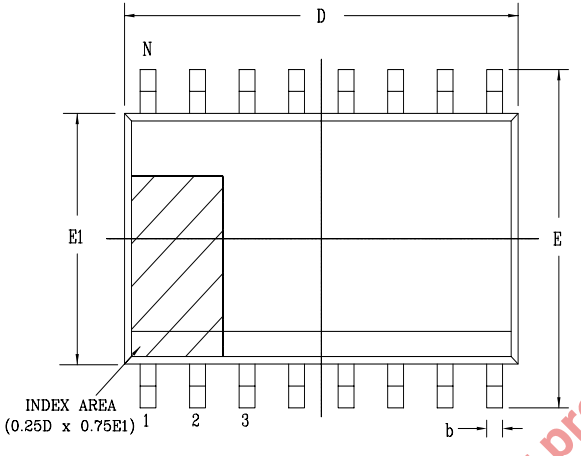

Top View

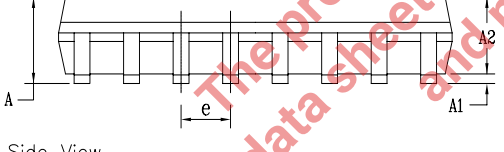

Side View

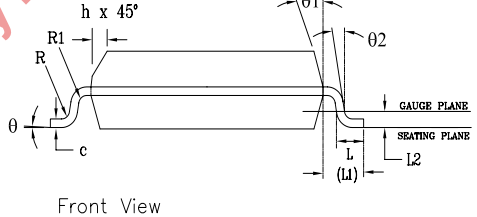

Front View

18 Pin SOICW JEDEC MS-013 Variation AB						
SYMBOLS	DIMENSIONS IN MM (Control Unit)			DIMENSIONS IN INCH (Reference Unit)		
	MIN	NOM	MAX	MIN	NOM	MAX
A	2.35	—	2.65	0.093	—	0.104
A1	0.10	—	0.30	0.004	—	0.012
A2	2.05	—	2.55	0.081	—	0.100
b	0.31	—	0.51	0.012	—	0.020
c	0.20	—	0.33	0.008	—	0.013
E	10.30 BSC			0.406 BSC		
E1	7.50 BSC			0.295 BSC		
e	1.27 BSC			0.050 BSC		
h	0.25	—	0.75	0.010	—	0.030
L	0.40	—	1.27	0.016	—	0.050
L1	1.40 REF			0.055 REF		
L2	0.25 BSC			0.010 BSC		
R	0.07	—	—	0.003	—	—
R1	0.07	—	—	0.003	—	—
θ	0°	—	8°	0°	—	8°
θ1	5°	—	15°	5°	—	15°
θ2	0°	—	—	0°	—	—
D	11.55 BSC			0.455 BSC		
N	18			18		

The product (or products) mentioned in this data sheet are no longer being manufactured and may not be ordered (OBS).

EXAR Powering Connectivity	EXAR CORPORATION	
	18 PIN SOICW PACKAGE OUTLINE	
Packaging Approval:	Drawing No:	18-PIN SOICW
By: JL Date: 11/21/07	Revision: B	Sheet: 1 OF 1

ORDERING INFORMATION[1], [3]

Part Number	Temp. Range	Package	Packaging Method	Lead-Free[2]
SP385ECA-L/TR	0°C to +70°C	20 Pin SSOP	Tape and Reel	Yes
SP385EEA-L/TR	-40°C to +85°C	20 Pin SSOP	Tape and Reel	Yes

NOTES:
1. Refer to www.maxlinear.com/SP385E for most up to date Ordering Information.
2. Visit www.maxlinear.com for additional information on Environmental Rating.
3. 18-pin WSOIC version is obsolete.

The product (or products) mentioned in this data sheet are no longer being manufactured and may not be ordered (OBS)

REVISION HISTORY

DATE	REVISION	DESCRIPTION
03/08/05	--	Legacy Sipex Datasheet
03/08/11	1.0.0	Convert to Exar Format, update ordering information and change ESD specification to IEC61000-4-2
01/29/20	1.0.1	Update to MaxLinear logo. Update ordering information.

The product (or products) mentioned in this data sheet are no longer being manufactured and may not be ordered (OBS)

MaxLinear, Inc.
5966 La Place Court, Suite 100
Carlsbad, CA 92008
760.692.0711 p.
760.444.8598 f.
www.maxlinear.com

The content of this document is furnished for informational use only, is subject to change without notice, and should not be construed as a commitment by MaxLinear, Inc. MaxLinear, Inc. assumes no responsibility or liability for any errors or inaccuracies that may appear in the informational content contained in this guide. Complying with all applicable copyright laws is the responsibility of the user. Without limiting the rights under copyright, no part of this document may be reproduced into, stored in, or introduced into a retrieval system, or transmitted in any form or by any means (electronic, mechanical, photocopying, recording, or otherwise), or for any purpose, without the express written permission of MaxLinear, Inc.

Maxlinear, Inc. does not recommend the use of any of its products in life support applications where the failure or malfunction of the product can reasonably be expected to cause failure of the life support system or to significantly affect its safety or effectiveness. Products are not authorized for use in such applications unless MaxLinear, Inc. receives, in writing, assurances to its satisfaction that: (a) the risk of injury or damage has been minimized; (b) the user assumes all such risks; (c) potential liability of MaxLinear, Inc. is adequately protected under the circumstances.

MaxLinear, Inc. may have patents, patent applications, trademarks, copyrights, or other intellectual property rights covering subject matter in this document. Except as expressly provided in any written license agreement from MaxLinear, Inc., the furnishing of this document does not give you any license to these patents, trademarks, copyrights, or other intellectual property.

MaxLinear, the MaxLinear logo, and any MaxLinear trademarks, MxL, Full-Spectrum Capture, FSC, G.now, AirPHY and the MaxLinear logo are all on the products sold, are all trademarks of MaxLinear, Inc. or one of MaxLinear's subsidiaries in the U.S.A. and other countries. All rights reserved. Other company trademarks and product names appearing herein are the property of their respective owners.

© 2005 - 2020 MaxLinear, Inc. All rights reserved.