Quad RS-485/RS-422 Line Drivers

- RS-485 or RS-422 Applications
- Quad Differential Line Drivers
- Tri-state Output Control
- 40ns Typical Driver Propagation Delays
- 5ns Skew
- -7V to +12V Common Mode Output Range
- 100µA Supply Current
- Single +5V Supply Operation
- Pin Compatible with SN75172, SN75174, LTC486 and LTC487

The product (or products) mentioned in this data sheet are no longer being manufactured and may not be ordered (OBS)

DESCRIPTION

The **SP486** and **SP487** are low-power quad differential line drivers meeting RS-485 and RS-422 standards. The SP486 features a common driver enable control; the SP487 provides independent driver enable controls for each pair of drivers. Both feature tri-state outputs and a wide common-mode output range. SP486 and SP487 are available in a 16-pin SOIC package.

SP487 is available, SP486 is obsolete

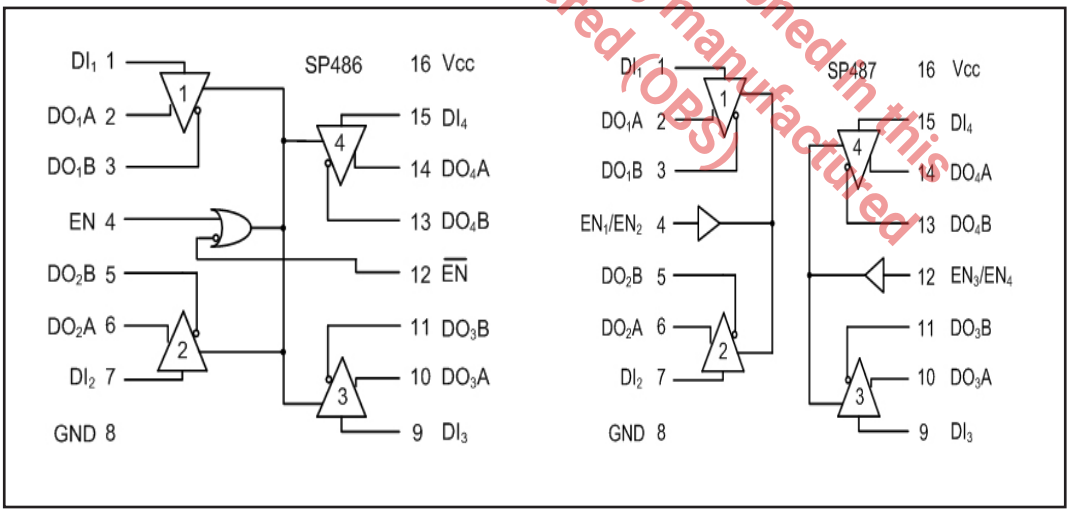

ABSOLUTE MAXIMUM RATINGS

These are stress ratings only and functional operation of the device at these ratings or any other above those indicated in the operation sections of the specifications below is not implied. Exposure to absolute maximum rating conditions for extended periods of time may affect reliability.

V_{CC}.....+7V
Input Voltages
Logic.....-0.5V to (Vcc + 0.5V)
Drivers.....-0.5V to (Vcc + 0.5V)
Driver Output Voltage.....+/-14V
Input Currents
Logic.....+/-25mA
Driver.....+/-25mA
Storage Temperature.....-65˚C to +150˚C
Power Dissipation
Plastic DIP.....375mW
(derate 7mW/ºC above +70ºC)
Small Outline.....375mW
(derate 7mW/ºC above +70ºC)

The product(s) mentioned in this data sheet are no longer being manufactured and may not be ordered (OBS)

ELECTRICAL CHARACTERISTICS

V_{CC} = +5.0V +/-5%; typicals at 25ºC; $T_{MIN} \le T_{AMB} \le T_{MAX}$ unless otherwise noted.

PARAMETERS	MIN.	TYP.	MAX.	UNITS	CONDITIONS
DC CHARACTERISTICS					
DIGITAL INPUTS					DI, EN, $\overline{EN}$, EN_1/EN_2, EN_3/EN_4
Voltage V_{IL}			0.8	Volts	
Voltage V_{IH}	2.0			Volts	
Input Current			+/-2	µA	V_{IN} = 0V to V_{CC}
DRIVER OUTPUTS					
Differential Voltage			5	Volts	I_O = 0; unloaded
Differential Voltage	2			Volts	R_L = 50Ω (RS-422); Figure 1
Differential Voltage	1.5	2	5	Volts	R_L = 27Ω (RS-485); Figure 1
Change in Output Magnitude for Complementary Output state			0.2	Volts	R_L = 27Ω or 50Ω; Figure 1
Common Mode Output Voltage		2.3	3	Volts	R_L = 27Ω or 50Ω; Figure 1
Change in Common Mode Output Magnitude for Complementary Output state			0.2	Volts	R_L = 27Ω or 50Ω; Figure 1
Driver Short Circuit Current V_{OH}			+/-250	mA	-7V ≤ V_O ≤ +10V
Driver Short Circuit Current V_{OL}			+/-250	mA	-7V ≤ V_O ≤ +10V
High Impedance Output Current		+/-2	+/-200	µA	V_O = -7V to +10V
POWER REQUIREMENTS					
Supply Voltage	4.75		5.25	Volts	
Supply Current		0.5	10	µA	No load, output enabled
Supply Current		0.1	10	µA	No load, output disabled

ELECTRICAL CHARACTERISTICS

V_{CC} = +5.0V +/-5%; typicals at 25°C; $T_{MIN} \leq T_{AMB} \leq T_{MAX}$ unless otherwise noted.

PARAMETERS	MIN.	TYP.	MAX.	UNITS	CONDITIONS
ENVIRONMENTAL AND MECHANICAL					
Operating Temperature, _C	0		+70	°C	
Operating Temperature, _E	-40		+85	°C	
Storage Temperature	-65		+150	°C	
Package -_T	16-pin SOIC				
AC CHARACTERISTICS					
Maximum Data Rate	10			Mbps	
Propagation Delay, t_{PLH}	20	40	60	ns	R_{DIFF} = 54 ohms, C_{L1}= C_{L2} = 100pF; Figure 2
Propagation Delay, t_{PHL}	20	40	60	ns	R_{DIFF} = 54 ohms, C_{L1}= C_{L2} = 100pF; Figure 2
Differential Driver Skew		5	15	ns	R_{DIFF} = 54 ohms, C_{L1}= C_{L2} = 100pF; Figure 2
Driver Rise Time (t_R)		20		ns	10% to 90%
Driver Fall Time (t_F)		20		ns	90% to 10%
Driver Enable to output High		60	110	ns	C_L = 100pF, Figures 3 and 5 (S2 closed)
Driver Enable to output Low		60	115	ns	C_L = 100pF, Figures 3 and 5 (S1 closed)
Driver Disable from output High		60	130	ns	C_L = 15pF, Figures 3 and 5 (S2 closed)
Driver Disable from output Low		60	130	ns	C_L = 15pF, Figures 3 and 5 (S1 closed)

The product (or products) mentioned in this data sheet are no longer being manufactured and may not be ordered (OBS)

SP486

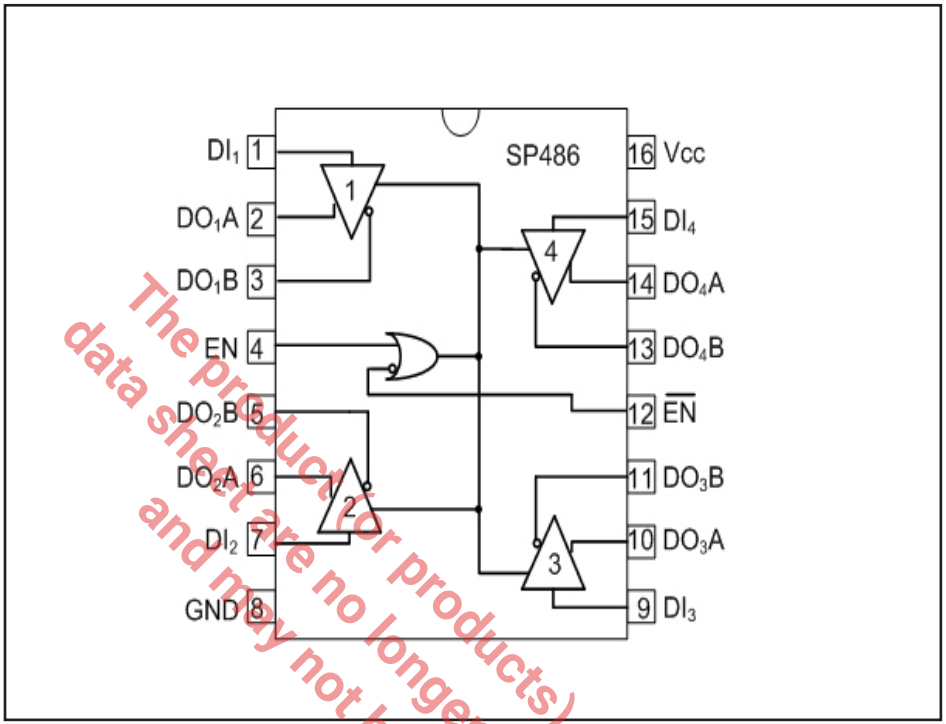

The product(or products) mentioned in this data sheet are no longer being manufactured and may not be ordered (OBS)

Pin Function SP486

Pin 1 - DI_1 - Driver 1 Input - If driver 1 output is enabled, a logic 0 on DI_1 forces driver output DO_1A low and DO_1B high. A logic 1 on DI_1 with driver 1 output enabled forces driver DO_1A high and DO_1B low.

Pin 2 - DO_1A - Driver 1 output A.

Pin 3 - DO_1B - Driver 1 output B.

Pin 4 - EN - Driver Output Enable; Please refer to SP486 truth table (1).

Pin 5 - DO_2B - Driver 2 output B.

Pin 6 - DO_2A - Driver 2 output A.

Pin 7 - DI_2 - Driver 2 Input - If driver 2 output is enabled, a logic 0 on DI_2 forces driver output DO_2A low and DO_2B high. A logic 1 on DI_2 with driver 2 output enabled forces driver DO_2A high and DO_2B low.

Pin 8 - GND - Ground.

Pin 9 - DI_3 - Driver 3 Input - If driver 3 output is enabled, a logic 0 on DI_3 forces driver output DO_3A low and DO_3B high. A logic 1 on DI_3 with driver 3 output enabled forces driver DO_3A high and DO_3B low.

Pin 10 - DO_3A - Driver 3 output A.

Pin 11 - DO_3B - Driver 3 output B.

Pin 12 - $\overline{EN}$ - Driver Output Disable; Please refer to SP486 truth table (1).

Pin 13 - DO_4B - Driver 4 output B.

Pin 14 - DO_4A - Driver 4 output A.

Pin 15 - DI_4 - Driver 4 Input - If driver 4 output is enabled, a logic 0 on DI_4 forces driver output DO_4A low and DO_4B high. A logic 1 on DI_4 with driver 4 output enabled forces driver DO_4A high and DO_4B low.

Pin 16 - Supply Voltage - +4.75V ≤ Vcc ≤ +5.25V.

SP487

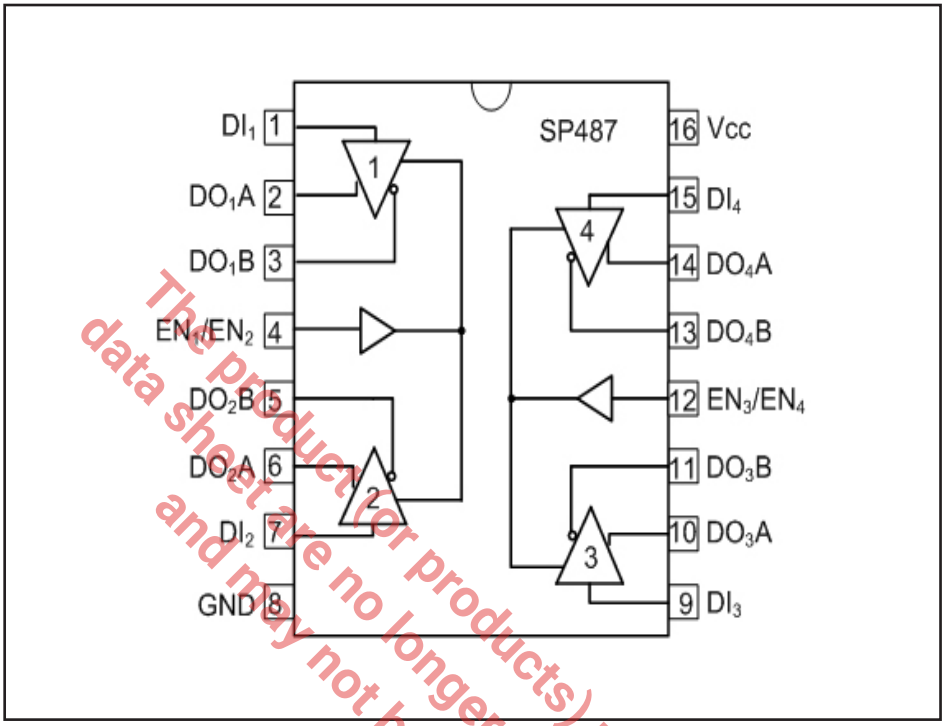

The product(or products) mentioned in this data sheet are no longer being manufactured and may not be ordered (OBS)

Pin Function SP487

Pin 1 - DI_1 - Driver 1 Input - If driver 1 output is enabled, a logic 0 on DI_1 forces driver output DO_1A low and DO_1B high. A logic 1 on DI_1 with driver 1 output enabled forces driver DO_1A high and DO_1B low.

Pin 2 - DO_1A - Driver 1 output A.

Pin 3 - DO_1B - Driver 1 output B.

Pin 4 - EN_1/EN_2 - Driver 1 and 2 Output Enable; Please refer to SP487 truth table (2).

Pin 5 - DO_2B - Driver 2 output B.

Pin 6 - DO_2A - Driver 2 output A.

Pin 7 - DI_2 - Driver 2 Input - If driver 2 output is enabled, a logic 0 on DI_2 forces driver output DO_2A low and DO_2B high. A logic 1 on DI_2 with driver 2 output enabled forces driver DO_2A high and DO_2B low.

Pin 8 - GND - Ground.

Pin 9 - DI_3 - Driver 3 Input - If driver 3 output is enabled, a logic 0 on DI_3 forces driver output DO_3A low and DO_3B high. A logic 1 on DI_3 with driver 3 output enabled forces driver DO_3A high and DO_3B low.

Pin 10 - DO_3A - Driver 3 output A.

Pin 11 - DO_3B - Driver 3 output B.

Pin 12 - EN_3/EN_4 - Driver 3 and 4 Output Enable; Please refer to SP487 truth table (2)..

Pin 13 - DO_4B - Driver 4 output B.

Pin 14 - DO_4A - Driver 4 output A.

Pin 15 - DI_4 - Driver 4 Input - If driver 4 output is enabled, a logic 0 on DI_4 forces driver output DO_4A low and DO_4B high. A logic 1 on DI_4 with driver 4 output enabled forces driver DO_4A high and DO_4B low.

Pin 16 - Supply Voltage - +4.75V ≤ Vcc ≤ +5.25V.

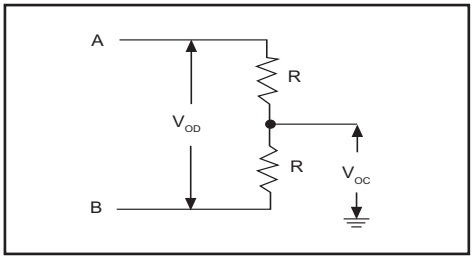

Figure 1. Driver DC Test Load

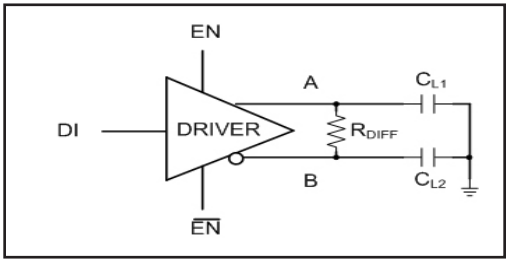

Figure 2. Driver Timing Test

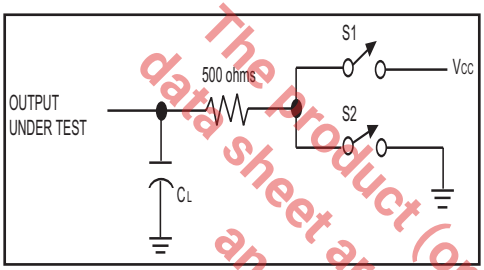

Figure 3. Driver Timing Test Load

The product (or products) mentioned in this data sheet are no longer being manufactured and may not be ordered (OBS)

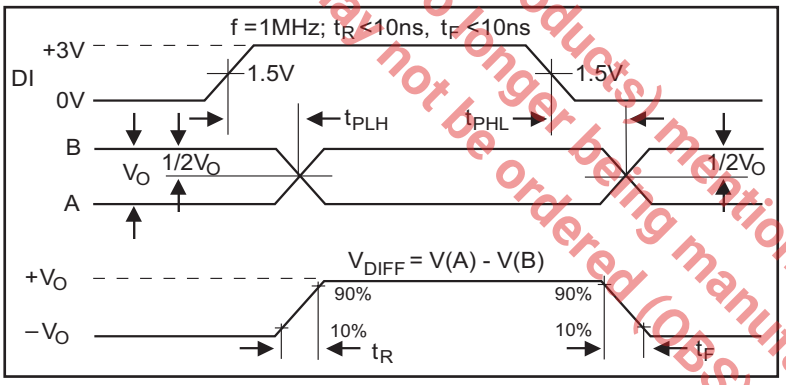

Figure 4. Driver Propagation Delays

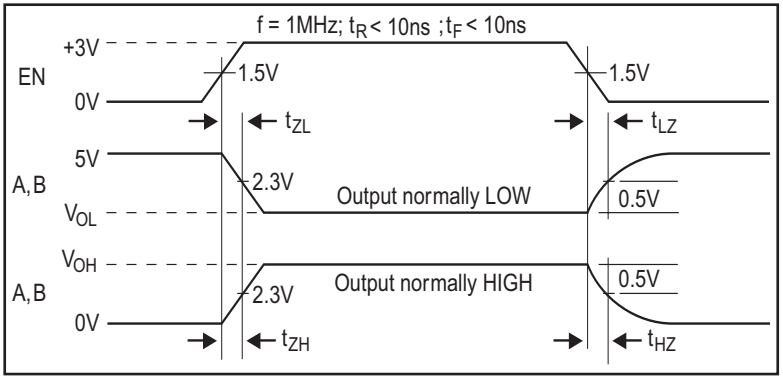

Figure 5. Driver Enable/Disable Timing

The **SP486** and **SP487** are low power quad differential line drivers meeting RS-485 and RS-422 standards. The SP486 features active high and active low common driver enable controls; the SP487 provides independent, active high driver enable controls for each pair of drivers. The driver outputs are short-circuit limited to 200mA. Data rates up to 10Mbps are supported. The SP486 and SP487 are available in a 16-pin SOIC package.

The product (or products) mentioned in this data sheet are no longer being manufactured and may not be ordered (OBS)

INPUT	ENABLES		OUTPUTS	
DI	EN	$\overline{EN}$	OUTA	OUTB
H	H	X	H	L
L	H	X	L	H
H	X	L	H	L
L	X	L	L	H
X	L	H	Hi-Z	Hi-Z

Table 1. SP486 Truth Table

INPUT	ENABLES	OUTPUTS	
DI	EN_1/EN_2 or EN_3/EN_4	OUTA	OUTB
H	H	H	L
L	H	L	H
X	L	Hi-Z	Hi-Z

Table 2. SP487 Truth Table

REVISION HISTORY			
REV.	DISCRIPTION	DATE	APP'D
A	DRAWING ORIGINATION	11/05/05	JL
B	DRAWING FORMAT MODIFICATION	09/13/06	JL
C	CHANGE DRAWING LOGO AND COMPANY NAME	11/21/07	JL

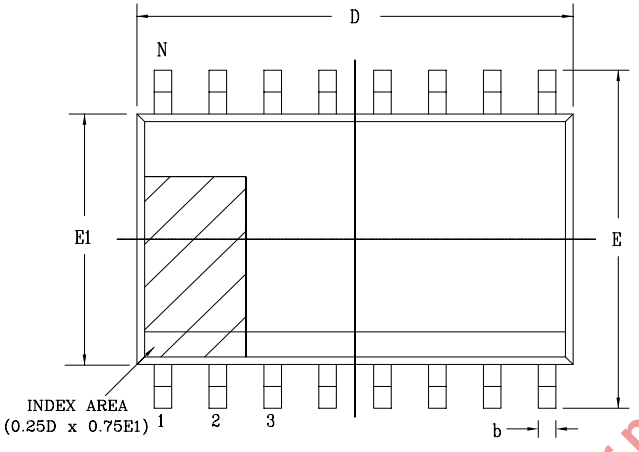

Top View

16 Pin SOICW JEDEC MS-013 Variation AA						
SYMBOLS	DIMENSIONS IN MM (Control Unit)			DIMENSIONS IN INCH (Reference Unit)		
	MIN	NOM	MAX	MIN	NOM	MAX
A	2.35	—	2.65	0.093	—	0.104
A1	0.10	—	0.30	0.004	—	0.012
A2	2.05	—	2.55	0.081	—	0.100
b	0.31	—	0.51	0.012	—	0.020
c	0.20	—	0.33	0.008	—	0.013
E	10.30 BSC			0.406 BSC		
E1	7.50 BSC			0.295 BSC		
e	1.27 BSC			0.050 BSC		
h	0.25	—	0.75	0.010	—	0.030
L	0.40	—	1.27	0.016	—	0.050
L1	1.40 REF			0.055 REF		
L2	0.25 BSC			0.010 BSC		
R	0.07	—	—	0.003	—	—
R1	0.07	—	—	0.003	—	—
θ	0°	—	8°	0°	—	8°
θ1	5°	—	15°	5°	—	15°
θ2	0°	—	—	0°	—	—
D	10.30 BSC			0.405 BSC		
N	16			16		

The product (or products) mentioned in this data sheet are no longer being manufactured and may not be ordered (OBS)

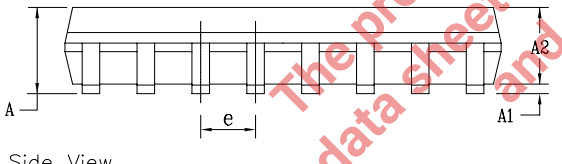

Side View

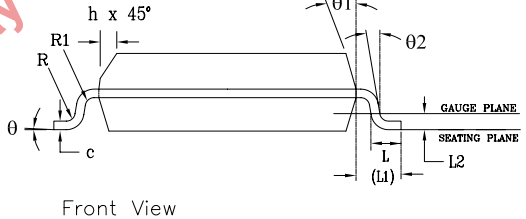

Front View

EXAR Powering Connectivity	EXAR CORPORATION		
	16 PIN SOICW PACKAGE OUTLINE		
Packaging Approval:		Drawing No:	16-PIN SOICW
By: JL	Date: 11/21/07	Revision: C	Sheet: 1 OF 1

ORDERING INFORMATION[1], [3]

PART NUMBER	TEMPERATURE RANGE	PACKAGE	PACKAGING METHOD	LEAD-FREE[2]
SP487CT-L	0°C to 70°C	16-pin WSOIC	Tube	Yes
SP487CT-L/TR	0°C to 70°C	16-pin WSOIC	Tape and Reel	Yes

NOTES:
1. Refer to www.maxlinear.com/SP487 for most up to date Ordering Information.
2. Visit www.maxlinear.com for additional information on Environmental Rating.
3. SP486 is obsolete.

REVISION HISTORY

DATE	REVISION	DESCRIPTION
June 2005	--	Legacy Sipex Datasheet
June 2011	1.0.0	Update ordering information per PDN 110510-01 and convert to Exar Format
January 2020	1.0.1	Update to MaxLinear logo. Update ordering information.

The product (or products) mentioned in this data sheet are no longer being manufactured and may not be ordered (OBS)

MaxLinear, Inc.
5966 La Place Court, Suite 100
Carlsbad, CA 92008
760.692.0711 p.
760.444.8598 f.
www.maxlinear.com

The content of this document is furnished for informational use only, is subject to change without notice, and should not be construed as a commitment by MaxLinear, Inc. MaxLinear, Inc. assumes no responsibility or liability for any errors or inaccuracies that may appear in the informational content contained in this guide. Complying with all applicable copyright laws is the responsibility of the user. Without limiting the rights under copyright, no part of this document may be reproduced into, stored in, or introduced into a retrieval system, or transmitted in any form or by any means (electronic, mechanical, photocopying, recording, or otherwise), or for any purpose, without the express written permission of MaxLinear, Inc.

Maxlinear, Inc. does not recommend the use of any of its products in life support applications where the failure or malfunction of the product can reasonably be expected to cause failure of the life support system or to significantly affect its safety or effectiveness. Products are not authorized for use in such applications unless MaxLinear, Inc. receives, in writing, assurances to its satisfaction that: (a) the risk of injury or damage has been minimized; (b) the user assumes all such risks; (c) potential liability of MaxLinear, Inc. is adequately protected under the circumstances.

MaxLinear, Inc. may have patents, patent applications, trademarks, copyrights, or other intellectual property rights covering subject matter in this document. Except as expressly provided in any written license agreement from MaxLinear, Inc., the furnishing of this document does not give you any license to these patents, trademarks, copyrights, or other intellectual property.

MaxLinear, the MaxLinear logo, and any MaxLinear trademarks, MxL, Full-Spectrum Capture, FSC, G.now, AirPHY and the MaxLinear logo are all on the products sold, are all trademarks of MaxLinear, Inc. or one of MaxLinear's subsidiaries in the U.S.A. and other countries. All rights reserved. Other company trademarks and product names appearing herein are the property of their respective owners.

© 2005 - 2020 MaxLinear, Inc. All rights reserved.