FEATURES

- Adjustable Output Down to 1.25V
- 1% Output Accuracy
- Output Current of 5A
- Low Dropout Voltage: 420mV @ 5A
- Tight Line Regulation: 0.06%
- Load Regulation: 0.2%
- Fast Transient Response
- Reverse-Battery Protection
- Current Limit and Thermal Protection

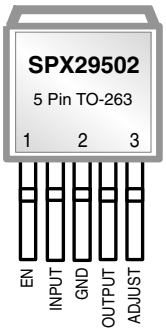

APPLICATIONS

- Powering VGA & Sound Card
- Power PC™ Supplies
- SMPS Post Regulator
- High Efficiency "Green" Computer Systems
- High Efficiency Linear Power Supplies
- Constant Current Regulators
- Adjustable Power Supplies
- Battery Charger

Now Available in Lead Free Packaging

This product (or products) mentioned in this datasheet are no longer being manufactured and may not be ordered (OBS)

DESCRIPTION

The SPX29501/02 are 5A highly accurate voltage regulators with a low dropout voltage of 420mV @ 5A. These regulators are specifically designed for low voltage applications that require a low dropout voltage and a fast transient response. They are fully fault protected against over-current, reverse battery, and positive and negative voltage transients. On-Chip trimming adjusts the reference voltage to 1% initial accuracy. Other features include Enable, and Error Flag.

The SPX295001/02 are offered in 5-pin TO-220 & TO-263 packages. For a 1.5A version, refer to the SPX29150 data sheet. For a 3A version, refer to the SPX29300 datasheet.

TYPICAL APPLICATION CIRCUITS

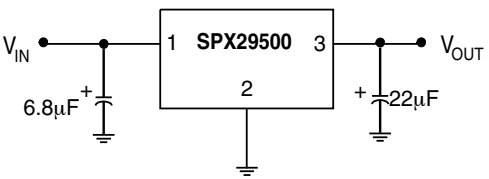

Figure 1. Fixed Output Linear Regulator

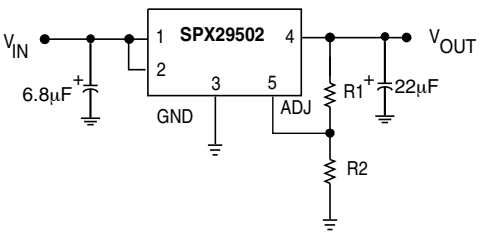

Figure 2. Adjustable Output Linear Regulator

ABSOLUTE MAXIMUM RATINGS

Lead Temperature (soldering, 5 seconds) .....260°C
Storage Temperature Range.....-65°C to +150°C
Operating Junction Temperature Range.....-40°C to +125°C
Input Voltage (Note 1) 20V

OPERATING RATINGS

Input Voltage 16V

ELECTRICAL CHARACTERISTICS

Specifications are at $V_{IN} = V_{OUT} + 1V$ and $I_{OUT} = 10mA$, $C_{IN} = 6.8\mu F$, $C_{OUT} = 22\mu F$, $T_A = 25°C$, unless otherwise specified. The ♦ denotes the specifications which apply over the full operating temperature range, unless otherwise specified.

PARAMETER	MIN	TYP	MAX	UNITS		CONDITIONS
Fixed Voltage Options		**SPX29501**				
1.8V Version						
Output Voltage	1.782 1.764	1.800 1.800	1.818 1.836	V	 ♦	I_{OUT} = 10mA 10mA ≤ I_{OUT} ≤ 5A, 2.8V ≤ V_{IN} ≤ 16V
2.5V Version						
Output Voltage	2.475 2.450	2.500 2.500	2.525 2.550	V	 ♦	I_{OUT} = 10mA 10mA ≤ I_{OUT} ≤ 5A, 3.5V ≤ V_{IN} ≤ 16V
3.3V Version						
Output Voltage	3.267 3.234	3.300 3.300	3.333 3.366	V	 ♦	I_{OUT} = 10mA 10mA ≤ I_{OUT} ≤ 5A, 4.3V ≤ V_{IN} ≤ 16V
5.0V Version						
Output Voltage	4.950 4.900	5.000 5.000	5.050 5.100	V	 ♦	I_{OUT} = 10mA 10mA ≤ I_{OUT} ≤ 5A, 6.0V ≤ V_{IN} ≤ 16V
All Voltage Options		**SPX29501/02**				
Line Regulation		0.06	0.5	%		I_{OUT}=10mA,(V_{OUT}+1V) ≤ V_{IN} ≤ 16V
Load Regulation		0.2	1	%		V_{IN}=V_{OUT}+2V, 10mA≤ I_{OUT} ≤ I_{FL} (Note 2)
ΔV/ΔT		20	100	ppm/°C	♦	V_{OUT} Temp Coefficient (Note 5)
Dropout Voltage, except 1.8V		90 250 420	250 800	mV	♦ ♦	I_{OUT}=250mA I_{OUT}=2.5A I_{OUT}=5A
Ground Current (Note 4)		20 70	50	mA	♦ 	I_{OUT}=2.5A I_{OUT}=5A
Ground Pin Current at Dropout		3		mA		V_{IN}=0.5V less than specified V_{OUT}, I_{OUT}=10mA
Current Limit		7.5	10	A	♦	(Note 3)
Output Noise Voltage (10Hz to 100kHz) I_L=100mA		425 350		μV_{RMS}		C_L=22μF C_L=33μF
Reference Voltage	1.228 1.215	1.240	1.252 1.265	V	 ♦	Adjustable version only
Reference Voltage	1.203		1.277	V		Adjustable version only (Note 7)
Adjust Pin Bias Current		40	80 120	nA	 ♦	
Reference Voltage Temp. Coeff.		20		ppm/°C		(Note 6)
Adjust Pin Bias Current Temp. Coeff.		0.1		nA/°C		

The product(or products) mentioned in this data sheet are no longer being manufactured and may not be ordered (OBS)

 © Copyright 2008 Exar Corporation

ELECTRICAL CHARACTERISTICS: Continued

Specifications are at $V_{IN} = V_{OUT} + 1V$ and $I_{OUT} = 10mA$, $C_{IN} = 6.8\mu F$, $C_{OUT} = 22\mu F$, $T_A = 25°C$, unless otherwise specified. The ♦ denotes the specifications which apply over the full operating temperature range, unless otherwise specified.

PARAMETER	MIN	TYP	MAX	UNITS		CONDITIONS
Flag Output (Error Comparator)		**SPX29501**				
Output Leakage Current		0.01	1 2	µA	 ♦	V_{OH}=16V
Output Low Voltage		220	300 400	mV	 ♦	Device set for 5V,V_{IN}=4.5V, I_{OL}=250µA
Upper Threshold Voltage	40 25	60		mV	 ♦	Device set for 5V, (Note 8)
Lower Threshold Voltage		75	95 140	mV	 ♦	Device set for 5V, (Note 8)
Hysteresis		15		mV		Device set for 5V, (Note 8)
Enable Input		**SPX29501/02**				
Input Logic Voltage Low (OFF) High (ON)	 2.4		0.8	V		(Note 10)
ENABLE Input Current		100 0.6	600 750 2 4	µA µA 	 ♦ ♦	V_{EN}=16V V_{EN}=0.8V
Regulator Output Current in Shutdown		10	500	µA	♦	(Note 9)
Thermal Resistance		2 60 2 60		°C/W		TO-220 Junction to Case, at Tab TO-220 Junction to Ambient TO-263 Junction to Case, at Tab TO-263 Junction to Ambient

The product (or products) mentioned in this data sheet are no longer being manufactured and may not be ordered (OBS)

NOTES:

Note 1: Maximum positive supply voltage of 20V must be of limited duration (<100ms) and duty cycle of less than 1%. The maximum continuous supply voltage is 16V.

Note 2: Full load current (I_{FL}) is defined as 5A.

Note 3: $V_{IN} = V_{OUT\ (NOMINAL)} + 1V$. For example, use $V_{IN} = 4.3V$ for a 3.3V regulator. Employ pulse-testing procedures to minimize temperature rise.

Note 4 Ground pin current is the regulator quiescent current. The total current drawn from the source is the sum of the load current plus the ground pin current.

Note 5: Output voltage temperature coefficient is defined as the worst case voltage change divided by the total temperature range.

Note 6: Thermal regulation is defined as the change in output voltage at time T after a change in power dissipation is applied, excluding load / line regulation effects. Specifications for a 200mA load pulse as $V_{IN} = 20V$ (a 4W pulse) for t = 10ms.

Note 7: $V_{REF} \le V_{OUT} \le (V_{IN}-1)$, $2.3V \le V_{IN} \le 16V$, $10mA \le I_L \le I_{FL}$, $T_j < T_{jmax}$.

Note 8: Comparator threshold is expressed in terms of a voltage differential at the Adjust terminal below the nominal reference voltage measured 6V input. To express these thresholds in terms of output voltage change, multiply the error amplifier gain = V_{OUT}/V_{REF} = (R1 + R2)/R2. For example, at a programmable output voltage of 5V, the Error output is guaranteed to go low when the output drops by 95mVx 5V/ 1.240V = 383mV. Threshold remain constant as a percent of V_{OUT} as V_{OUT} is varied, with the dropout warning occurring at typically 5% below nominal, 7.7% guaranteed.

Note 9: $V_{EN} \le 0.4V$ and $V_{IN} \le 16V$, $V_{OUT} = 0$.

Note 10: Measured with $I_{OUT} = I_{OUT}$ MIN (10mA).

 © Copyright 2008 Exar Corporation

FUNCTIONAL DIAGRAM

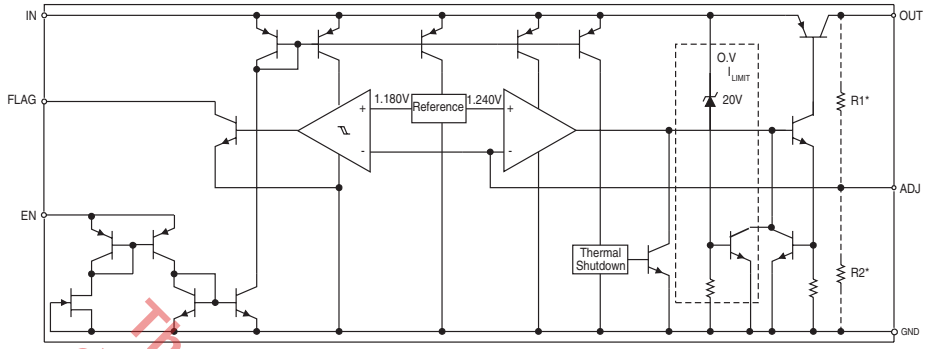

The product (or products) mentioned in this data sheet are no longer being manufactured and may not be ordered (OBS)

TYPICAL PERFORMANCE CHARACTERISTICS

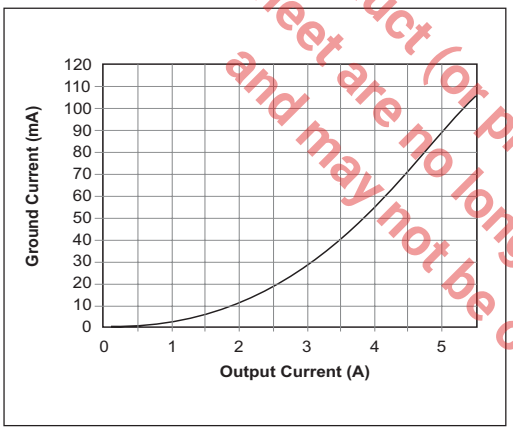

Figure 3. Ground Current (mA) vs. Output Current (A)

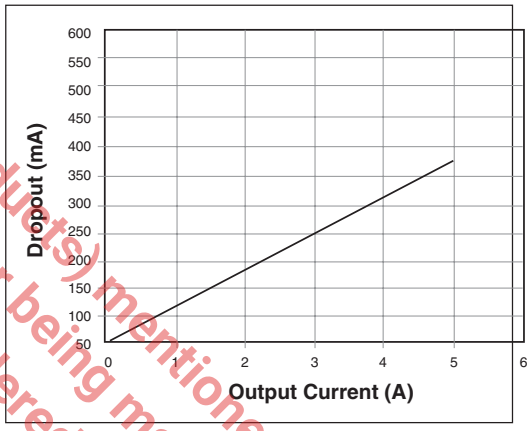

Figure 4. Dropout (mV) vs. Output Current (A)

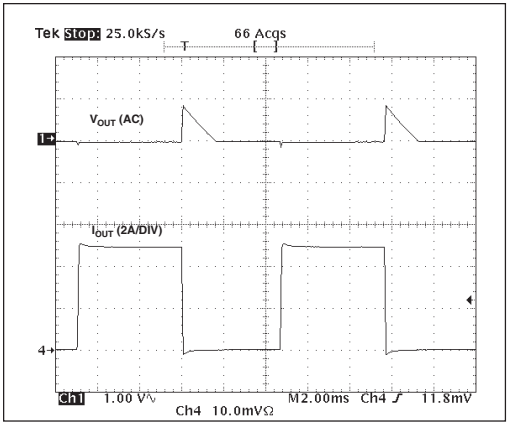

Figure 5. Load Transient (V_{IN}=4V, V_O=3.3V, C_{OUT}=22µF, 10mA~5A)

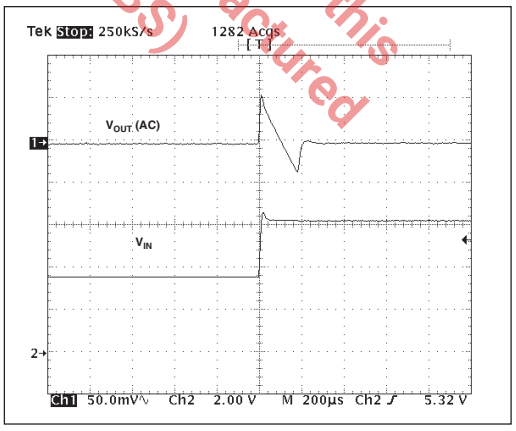

Figure 6. Line Transient (C_{OUT}=22µF, I_O=10mA)

 © Copyright 2008 Exar Corporation

The SPX29501/02 incorporates protection against over-current faults, reversed load insertion, over temperature operation, and positive and negative transient voltage.

Thermal Considerations

Although the SPX29501/02 offers limiting circuitry for overload conditions, it is still necessary to insure that the maximum junction temperature is not exceeded in the application. Heat will flow through the lowest resistance path, the junction-to-case path. In order to insure the best thermal flow of the component, proper mounting is required.

TO-220 Design Example:

Assume that V_{IN} = 8V, V_{OUT} = 5V, I_{OUT} = 5A, T_A = 50°C, θ_{HA} = 1°C/W, θ_{CH} = 2°C/W, and θ_{JC} = 2°C/W, where:

T_A = ambient temperature,
θ_{HA} = heatsink to ambient thermal resistance
θ_{CH} = case to heatsink thermal resistance
θ_{JC} = junction to case thermal resistance

The power calculated under these conditions is:

$$P_D = (V_{IN} - V_{OUT}) * I_{OUT} = 15W.$$

And the junction temperature is calculated as

$$T_J = T_A + P_D * (\theta_{HA} + \theta_{CH} + \theta_{JC}) \text{ or}$$
$$T_J = 50 + 15 * (1+2+2) = 125°C$$

Reliable operation is insured.

Capacitor Requirements

The output capacitor is needed to insure stability and minimize the output noise. The value of the capacitor varies with the load. However, a minimum value of 22µF aluminum capacitor will guarantee stability over all load conditions. A tantalum capacitor is recommended if a faster load transient response is needed. If the power source has a high AC impedance, a 0.1µF ceramic capacitor between input & ground is recommended.

Minimum Load Current

To ensure a proper behavior of the regulator under light load, a minimum load of 10mA for SPX29501/02 is required.

Adjustable Regulator Design

The SPX29502 is an adjustable regulator that can be programmed to any value between 1.24V and 16V using 2 resistors, R1 and R2. The relationship between the resistors is:

$$R1 = R2(V_{OUT}/1.24-1).$$

Error Flag

The SPX29501 features an error flag that indicates either an over current or under voltage condition. The flag output goes low, sinking 10mA when either condition occurs.

Enable Input

The SPX29501/02 have an Enable function that switches the regulator on and off. Their thresholds are TTL compatible. Enabling the regulator requires approximately 20µA of current.

Typical Application Circuits

Figure 1 represents at typical fixed output regulator. Figure 2 represents an adjustable output regulator. The values of R1 and R2 set the output voltage value as follows:

$$V_{OUT} = V_{REF} * [1 + (R1/R2)].$$

For best results, the total series resistance should guarantee a minimum regulator load current of 10mA.

The product (or products) mentioned in this data sheet are no longer being manufactured and may not be ordered (OBS)

 © Copyright 2008 Exar Corporation

TO-263-5 Package (T5)

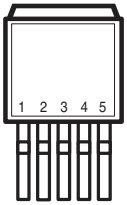

Top View

SPX29501	SPX29502
1)ENABLE	1) ENABLE
2)INPUT	2) INPUT
3)GND	3) GND
4)OUTPUT	4) OUTPUT
5)FLAG	5) ADJUST

TO-220-5 Package (U5)

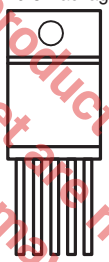

1 2 3 4 5

Top View

SPX29501	SPX29502
1)ENABLE	1) ENABLE
2)INPUT	2) INPUT
3)GND	3) GND
4)OUTPUT	4) OUTPUT
5)FLAG	5) ADJUST

*Tab is internally connected to GND

The product (or products) mentioned in this data sheet are no longer being manufactured and may not be ordered (OBS)

 © Copyright 2008 Exar Corporation

REVISION HISTORY			
REV.	DISCRIPTION	DATE	APP'D
A	DRAWING ORIGINATION	01/18/06	JL
B	CORRECTED JEDEC VARIATION FROM BB TO BA	06/12/06	JL
C	DRAWING FORMAT MODIFICATION	09/12/06	JL
D	CHANGE DRAWING LOGO AND COMPANY NAME	11/28/07	JL

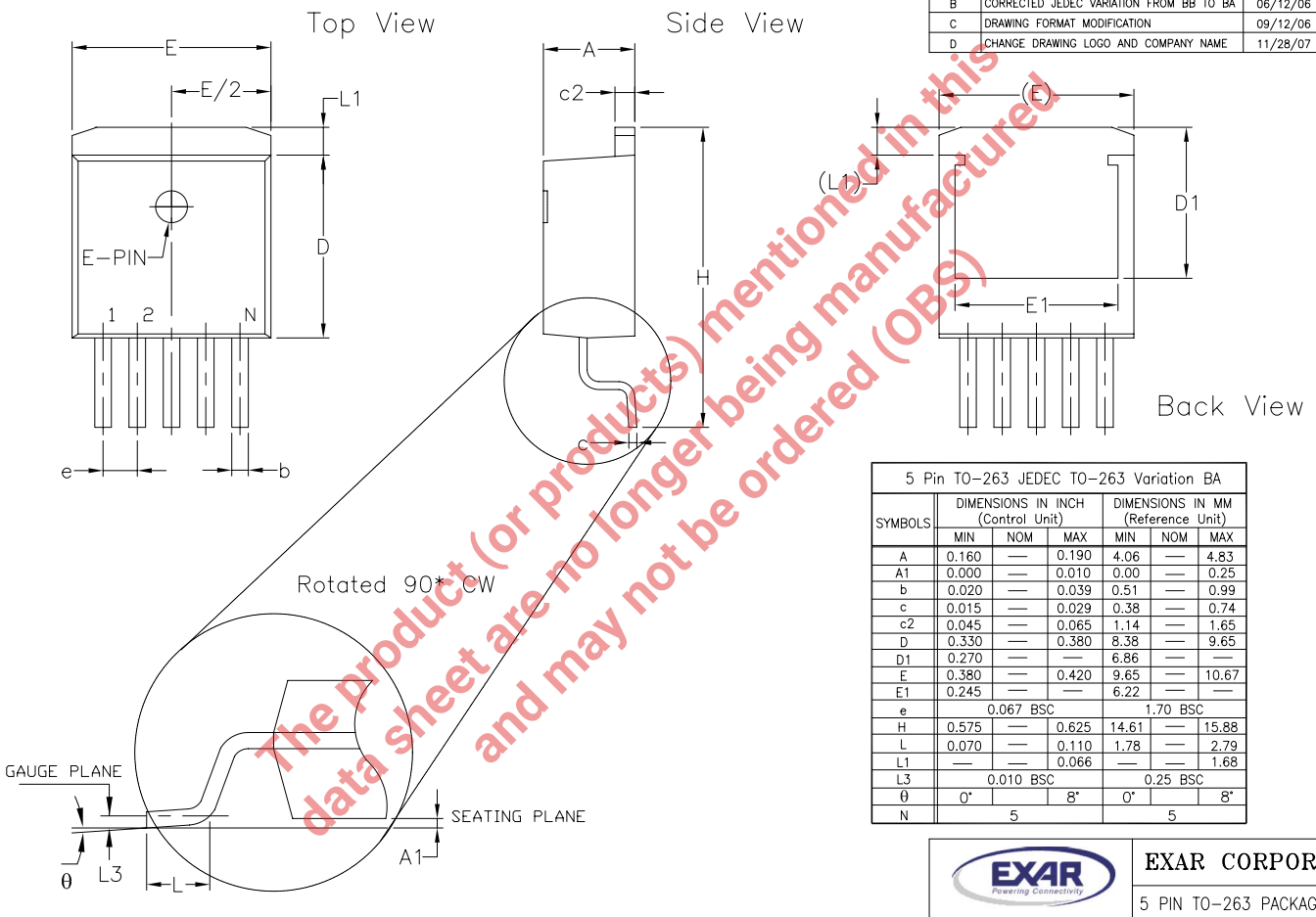

The product (or products) mentioned in this data sheet are no longer being manufactured and may not be ordered (OBS)

5 Pin TO-263 JEDEC TO-263 Variation BA						
SYMBOLS	DIMENSIONS IN INCH (Control Unit)			DIMENSIONS IN MM (Reference Unit)		
	MIN	NOM	MAX	MIN	NOM	MAX
A	0.160	—	0.190	4.06	—	4.83
A1	0.000	—	0.010	0.00	—	0.25
b	0.020	—	0.039	0.51	—	0.99
c	0.015	—	0.029	0.38	—	0.74
c2	0.045	—	0.065	1.14	—	1.65
D	0.330	—	0.380	8.38	—	9.65
D1	0.270	—	—	6.86	—	—
E	0.380	—	0.420	9.65	—	10.67
E1	0.245	—	—	6.22	—	—
e	0.067 BSC			1.70 BSC		
H	0.575	—	0.625	14.61	—	15.88
L	0.070	—	0.110	1.78	—	2.79
L1	—	—	0.066	—	—	1.68
L3	0.010 BSC			0.25 BSC		
θ	0°		8°	0°		8°
N	5			5		

EXAR CORPORATION

5 PIN TO-263 PACKAGE OUTLINE

Packaging Approval:		Drawing No:	5-PIN TO-263
By: JL	Date: 11/28/07	Revision: D	Sheet: 1 OF 1

© Copyright 2008 Exar Corporation

REVISION HISTORY			
REV.	DISCRIPTION	DATE	APP'D
A	DRAWING ORIGINATION	06/30/05	JL
B	DRAWING FORMAT MODIFICATION	05/09/06	JL
C	CHANGE DRAWING LOGO AND COMPANY NAME	11/28/07	JL

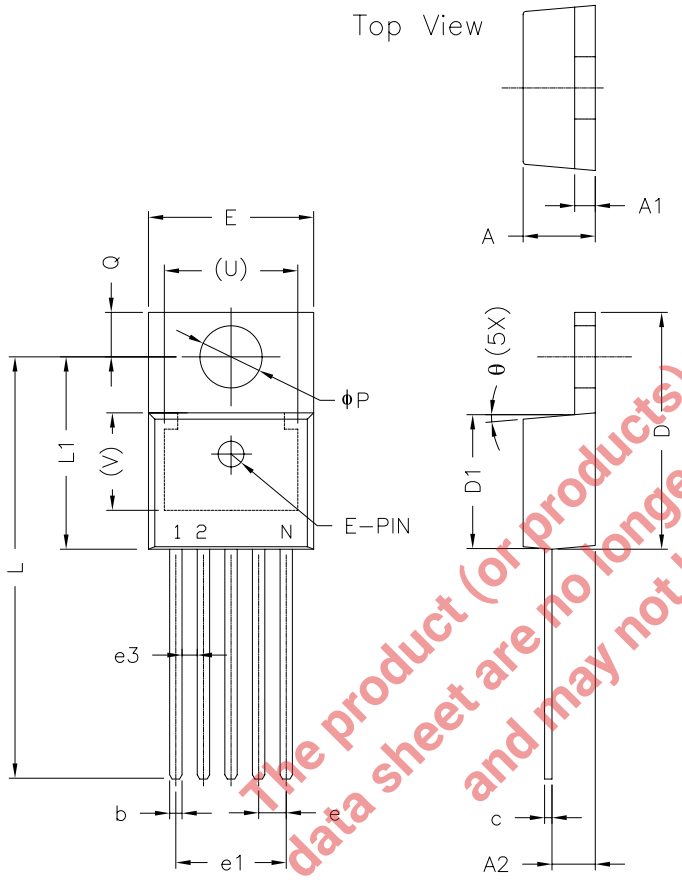

The product (or products) mentioned in this data sheet are no longer being manufactured and may not be ordered (OBS)

5 Pin TO-220 JEDEC TS-001 Variation AA				
SYMBOLS	DIMENSIONS IN INCH (Control Unit)		DIMENSIONS IN MM (Reference Unit)	
	MIN	MAX	MIN	MAX
A	0.165	0.190	4.19	4.82
A1	0.035	0.055	0.89	1.39
A2	0.085	0.115	2.16	2.92
b	0.020	0.040	0.51	1.01
c	0.012	0.025	0.31	0.63
D	0.570	0.625	14.48	15.87
D1	0.330	0.370	8.39	9.39
E	0.390	0.415	9.91	10.54
e	0.067 BSC		1.70 BSC	
e1	0.263	0.273	6.68	6.93
e3	0.030	0.040	0.76	1.02
L	0.945	1.045	24.00	26.54
L1	0.465	0.539	11.81	13.69
P	0.139	0.156	3.53	3.96
Q	0.103	0.113	2.62	2.87
U	0.300 REF		7.62 REF	
V	0.240 REF		6.10 REF	
θ	3°	7°	3°	7°
N	5		5	

EXAR Powering Connectivity	EXAR CORPORATION		
	5 PIN TO-220 PACKAGE OUTLINE		
Packaging Approval:	Drawing No:	5-PIN TO-220	
By: JL / Date: 11/28/07	Revision: C	Sheet: 1 OF 1	

© Copyright 2008 Exar Corporation

ORDERING INFORMATION

PART NUMBER	ACCURACY	OUTPUT VOLTAGE	PACKAGE
SPX29500U-L-1-8	EOL		
SPX29500U-L-2-5	EOL		
SPX29500U-L-3-3	EOL		
SPX29500U-L-5-0	EOL		
SPX29500T-L-1-8	EOL		
SPX29500T-L-2-5	EOL		
SPX29500T-L-3-3	EOL		
SPX29500T-L-5-0	EOL		
SPX29501U5-L-1-8	EOL		
SPX29501U5-L-2-5	EOL		
SPX29501U5-L-3-3	EOL		
SPX29501U5-L-5-0	EOL		
SPX29501T5-L-1-8	1.0%	1.8V	5 lead TO-263
SPX29501T5-L-2-5	1.0%	2.5V	5 lead TO-263
SPX29501T5-L-3-3	1.0%	3.3V	5 lead TO-263
SPX29501T5-L-5-0	1.0%	5.0V	5 lead TO-263
SPX29502T5-L	1.0%	Adj	5 lead TO-263
SPX29502U5-L	1.0%	Adj	5 lead TO-220
SPX29503T5-L	EOL		
SPX29503U5-L	EOL		

Please consult the factory for pricing and availability on a Tape-On-Reel option.

The product (or products) mentioned in this data sheet are no longer being manufactured and may not be ordered (OBS)

FOR FURTHER ASSISTANCE

Email: customersupport@exar.com

Exar Technical Documentation: http://www.exar.com/TechDoc/default.aspx?

EXAR CORPORATION

HEADQUARTERS AND SALES OFFICES

48720 Kato Road

Fremont, CA 94538 – USA

Tel.: +1 (510) 668-7000

Fax: +1 (510) 668-7030

www.exar.com

NOTICE

EXAR Corporation reserves the right to make changes to the products contained in this publication in order to improve design, performance or reliability. EXAR Corporation assumes no responsibility for the use of any circuits described herein, conveys no license under any patent or other right, and makes no representation that the circuits are free of patent infringement. Charts and schedules contained here in are only for illustration purposes and may vary depending upon a user's specific application. While the information in this publication has been carefully checked; no responsibility, however, is assumed for inaccuracies.

EXAR Corporation does not recommend the use of any of its products in life support applications where the failure or malfunction of the product can reasonably be expected to cause failure of the life support system or to significantly affect its safety or effectiveness. Products are not authorized for use in such applications unless EXAR Corporation receives, in writing, assurances to its satisfaction that: (a) the risk of injury or damage has been minimized; (b) the user assumes all such risks; (c) potential liability of EXAR Corporation is adequately protected under the circumstances.

Reproduction, in part or whole, without the prior written consent of EXAR Corporation is prohibited.