GENERAL DESCRIPTION

The SPX431L is a 3-terminal adjustable shunt voltage regulator providing a highly accurate bandgap reference. The SPX431L acts as an open-loop error amplifier with a 2.5V temperature compensation reference. The SPX431L's thermal stability, wide operating current (100mA) and temperature range (0°C to 105°C) makes it suitable for a variety of applications that require a low cost, high performance solution. SPX431L tolerance of 0.5% is proven to be sufficient to overcome all of the other errors in the system to virtually eliminate the need for trimming in the power supply manufacturer's assembly line and contribute a significant cost savings.

The output voltage may be adjusted to any value between VREF and 20V with two external resistors. The SPX431L is available in TO-92, and SOT-89 packages.

APPLICATIONS

- **Battery Operating Equipment**
- **Adjustable Supplies**
- **Switching Power Supplies**
- **Error Amplifiers**
- **Single Supply Amplifier**
- **Monitors / VCRs / TVs**
- **Personal Computers**

FEATURES

- **Tight Voltage Tolerance 0.5% at 10mA**
- **Wide Operating Current 1mA to 100mA**
- **Extended Temperature Range: 0°C to 105°C**
- **Low Temperature Coefficient 30 ppm/°C**
- **Improved Replacement in Performance for TL431 and AS431**
- **Low Cost Solution**

The product (or products) mentioned in this data sheet are no longer being manufactured and may not be ordered (OBS)

TYPICAL BLOCK DIAGRAM

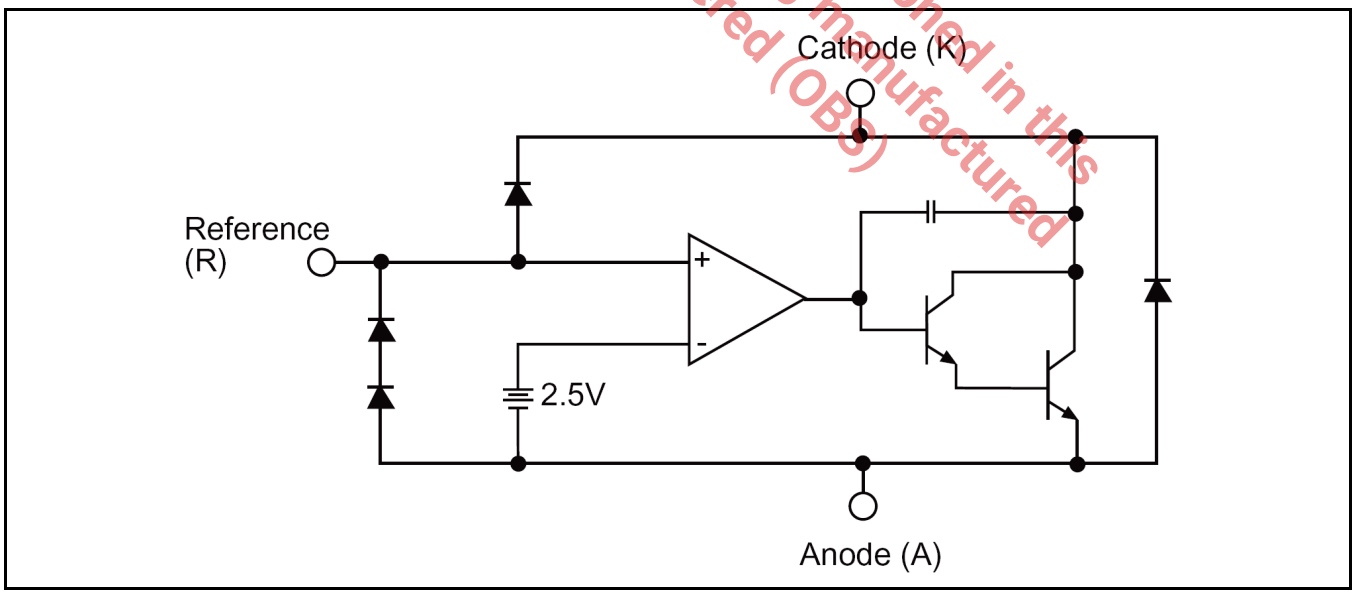

Fig. 1: SPX431L Precision Adjustable Shunt Regulator

ABSOLUTE MAXIMUM RATINGS

These are stress ratings only and functional operation of the device at these ratings or any other above those indicated in the operation sections of the specifications below is not implied. Exposure to absolute maximum rating conditions for extended periods of time may affect reliability.

Cathode-Anode Reverse Breakdown V_{KA} 20V
Anode-Cathode Forward Current, (<10ms) I_{AK} 1A
Operating Cathode Current I_{KA} 100mA
Reference Input Current I_{REF} 10mA
Continuous Power Dissipation at 25°C PD
TO-92 ..... 775mW
SOT-89 ..... 1000mW
Storage Temperature T_{STG} .....-65 to 150°C
Lead Temperature (Soldering 10 sec.) T_L.....300°C

OPERATING RATINGS

Input Voltage Range V_{KA}.....V_{REF} to 20V
Cathode Current I_K 10ma
Junction Temperature Range .....150 °C
Thermal Resistance
0_{JA} (TO-92) .....160°C/W
0_{JC} (TO-92) ..... 80°C/W
Typical Derating (TO-92) .....6.3 mW/°C

0_{JA} (SOT-89) .....110°C/W
0_{JC} (SOT-89) ..... 8°C/W
Typical Derating (SOT-89) .....9.1 mW/°C

The product (or products) mentioned in this data sheet are no longer being manufactured and may not be ordered (OBS)

ELECTRICAL SPECIFICATIONS

Specifications with standard type are for an Operating Junction Temperature of T_A = 25°C only; limits applying over the full Operating Junction Temperature range are denoted by a "•". Minimum and Maximum limits are guaranteed through test, design, or statistical correlation. Typical values represent the most likely parametric norm at T_A = 25°C, and are provided for reference purposes only. Unless otherwise indicated, I_K = 10mA V_K = V_{REF}.

Parameter	Min.	Typ.	Max.	Units		Conditions
SPX431LA						
Reference Voltage	2.490	2.503	2.515	V		
ΔVREF withTemp.[1]		0.07	0.20	mV/°C		
Ratio of Change in VREF to Cathode Voltage	-2.7 -2.0	-1.0 -0.4	0.3	mV/V		VREF to 10V VREF to 10V
Reference Input Current		0.7	4.0	µA		
IREF Temp Deviation		0.4	1.2	µA		TJ = 0°C to 105°C
Min IK for Regulation		0.4	1.0	mA		
Off State Leakage		0.04	1.0	µA		VREF = 0V, VKA = 20V
Dynamic Output Impedance		0.15	0.5	Ω		ƒz ≤ 1kHz IK = 1 to 100mA
SPX431L						
Reference Voltage	2.470	2.495	2.520	V		
ΔVREF withTemp.[1]		0.07	0.20	mV/°C		
Ratio of Change in VREF to Cathode Voltage	-2.7 -2.0	-1.0 -0.4	0.3	mV/V		VREF to 10V VREF to 10V
Reference Input Current		0.7	4.0	µA		
IREF Temp Deviation		0.4	1.2	µA		TJ = 0°C to 105°C
Min IK for Regulation		0.4	1.0	mA		
Off State Leakage		0.04	1.0	µA		VREF = 0V, VKA = 20V
Dynamic Output Impedance		0.15	0.5	Ω		ƒz ≤ 1kHz IK = 1 to 100mA
SPX431LC						
Reference Voltage	2.445	2.495	2.520	V		
ΔVREF withTemp.[1]		0.07	0.20	mV/°C		
Ratio of Change in VREF to Cathode Voltage	-2.7 -2.0	-1.0 -0.4	0.3	mV/V		VREF to 10V VREF to 10V
Reference Input Current		0.7	4.0	µA		
IREF Temp Deviation		0.4	1.2	µA		TJ = 0°C to 105°C

Parameter	Min.	Typ.	Max.	Units		Conditions
Min IK for Regulation		0.4	1.0	mA		
Off State Leakage		0.04	1.0	µA		VREF = 0V, VKA = 20V
Dynamic Output Impedance		0.15	0.5	Ω		$f_Z \leq$ 1kHz I_K = 1 to 100mA

Note 1: See appropriate test circuit (Figures 25, 26, 27)

PIN ASSIGNMENT

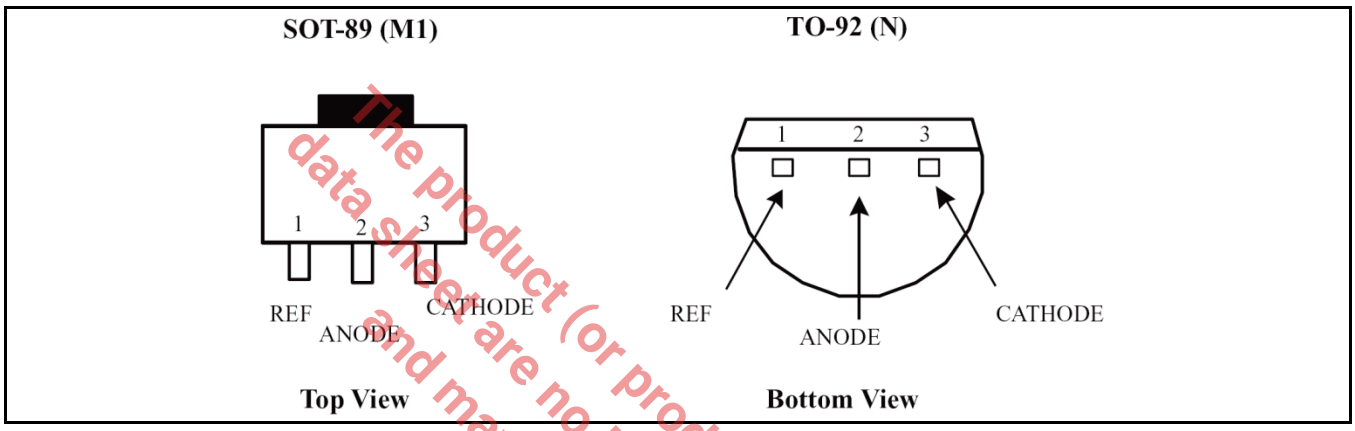

Fig. 2: SPX431L Pin Assignment

The product (or products) mentioned in this data sheet are no longer being manufactured and may not be ordered (OBS)

PIN DESCRIPTION

Name	Pin Number	Description
NAME	1	Reference
NAME	2	Anode
NAME	3	Cathode

ORDERING INFORMATION

Part Number	Temperature Range	Marking	Package	Packing Quantity	Note 1	Note 2
SPX431LAN-L	0°C to 105°C	Sipex 431LAN 25 YYWWLX	TO-92-3	Bulk	Halogen Free	2.503V 0.5% Acc
SPX431LAN-L/TR				Tape & Reel		
SPX431LM1-L	0°C to 105°C	P011 YWWXXX	SOT-89-3	Bulk	Halogen Free, bar on left side of marking denotes "-L" lead free product	2.495V 1.0% Acc
SPX431LM1-L/TR				Tape & Reel		
SPX431LN-L	0°C to 105°C	Sipex 431LN 25 YYWWLX	TO-92-3	Bulk	Halogen Free	2.495V 1.0% Acc
SPX431LN-L/TR				Tape & Reel		

"YY" = Year (Last 2 digits) – "Y" = Year (Last Digit)

"WW" = Work Week

"L" = Lead free designator

"X" = Lot Number (example AA234567) – "XXX" = Lot Number (example AA234567)

No bottom marking

TYPICAL PERFORMANCE CHARACTERISTICS

Schematic and BOM from Application Information section of this datasheet. Resistor values are chosen such that the effect to I_{REF} is negligible.

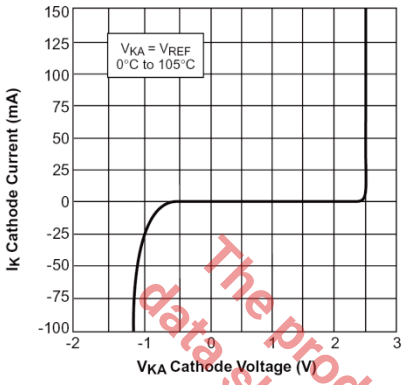

Fig. 3: High Current Operating Characteristics

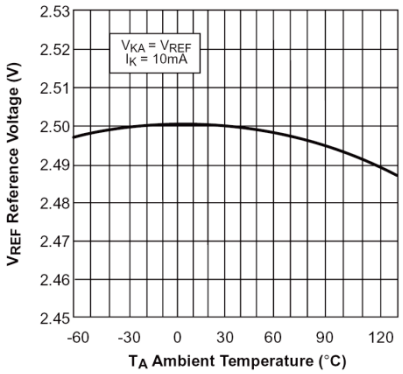

Fig. 4: Reference Voltage VS Ambient Temperature

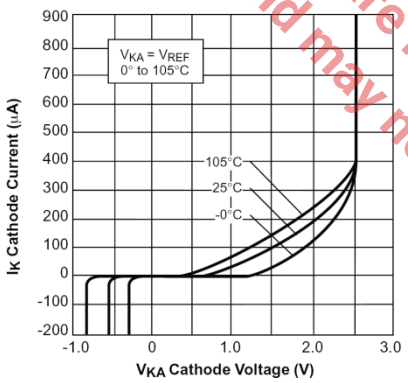

Fig. 5 Low Current Operating Characteristics.

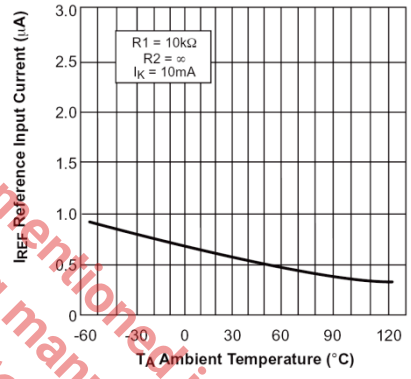

Fig. 6 Reference Input Current VS Ambient Temperature.

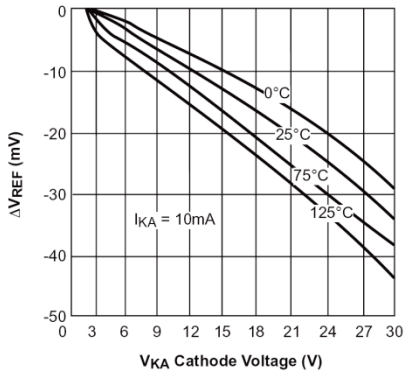

Fig. 7 Reference Voltage Line Regulation VS Cathode Voltage and $T_{AMBIENT}$

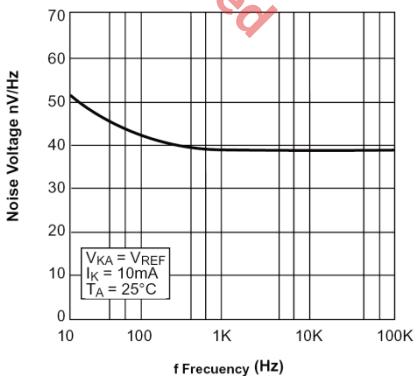

Fig. 8 Noise Voltage VS Frequency

The product (or products) mentioned in this data sheet are no longer being manufactured and may not be ordered (OBS)

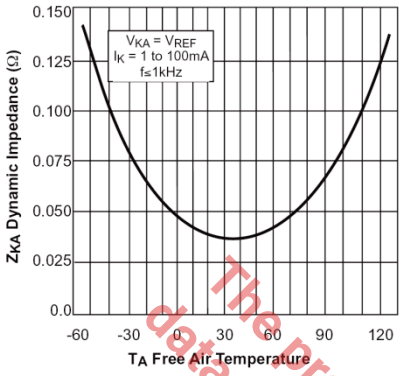

Fig. 9 Low Frequency Dynamic Output Impedance VS TAMBIENT

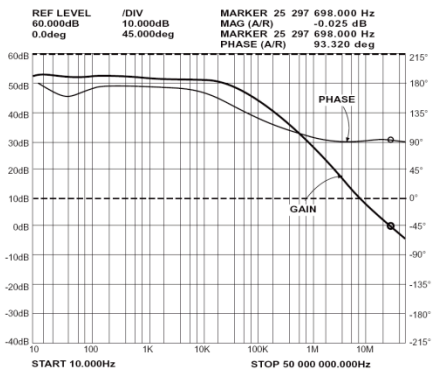

Fig. 10 Small Signal Gain and Phase VS Frequency; IK = 10mA, TA = 25°C

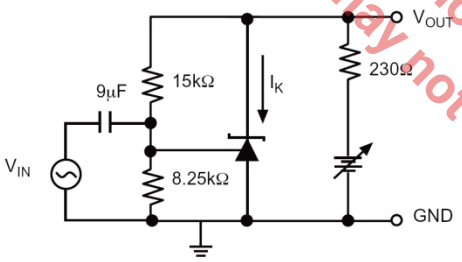

Fig. 11 Test Circuit for Gain and Phase Frequency Response

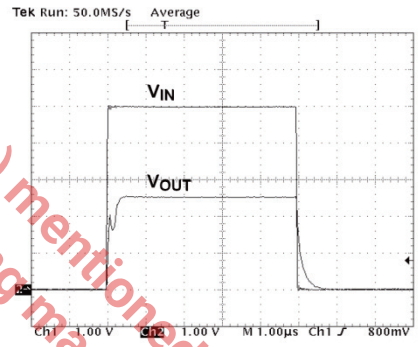

Fig. 2 FZ = 100kHz, IK = 10mA, TA = 25°C

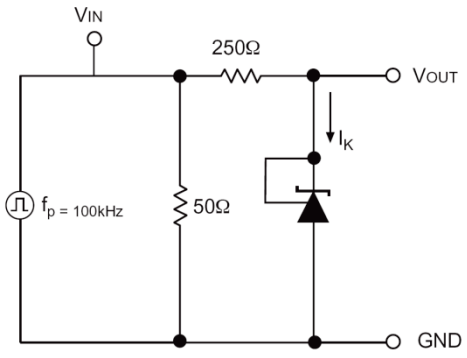

Fig. 33 Test Circuit for Pulse Response

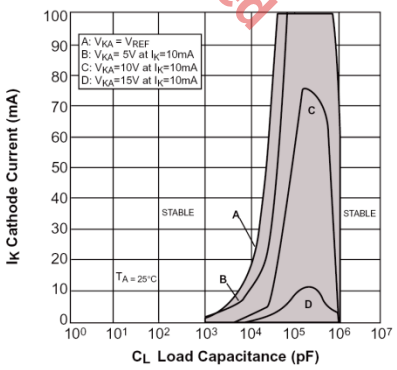

Fig. 44 Stability Boundry Conditions

The product (or products) mentioned in this data sheet are no longer being manufactured and may not be ordered (OBS)

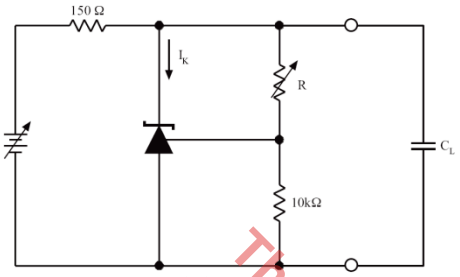

Fig. 55 Test Circuit for Stability

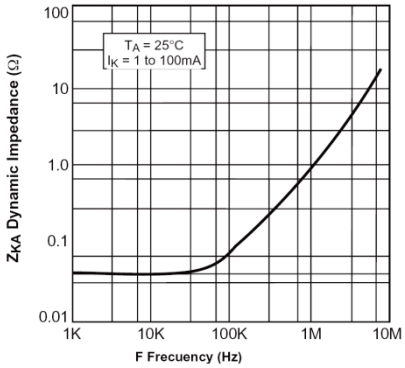

Fig. 66 Dynamic Output Impedance T_A = 25°C, I_K = 1 to 100mA

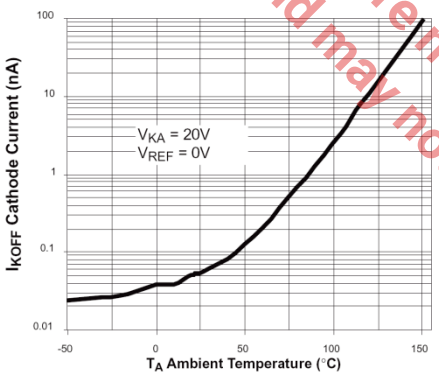

Fig. 77 Off State Leakage

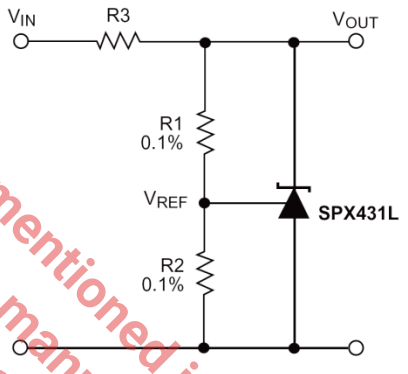

Fig. 88 Shunt Regulator V_{OUT} = (1+R1/R2)V_{REF}

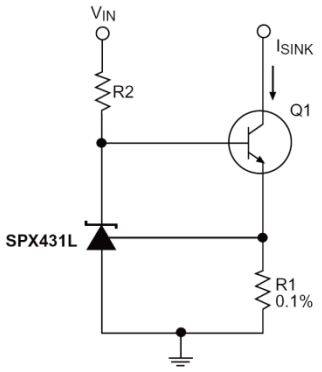

Fig. 199 Constant Current Sink, I_{SINK} = V_{REF}/R1

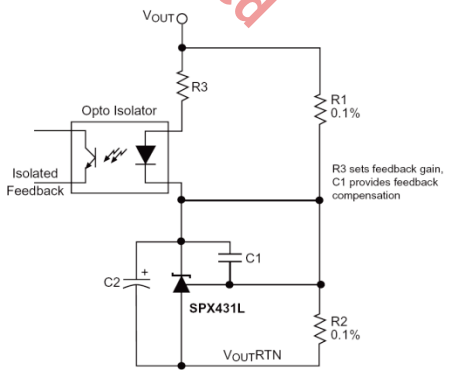

Fig. 100 Reference Amplifier for Isolated Feedback in Off-Line DC-DC Converters

The product (or products) mentioned in this data sheet are no longer being manufactured and may not be ordered (OBS)

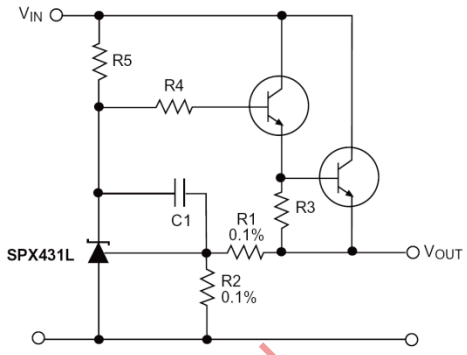

Fig. 111 Precision High Current Series Regulator

$V_{OUT} = (1+R1/R2)V_{REF}$

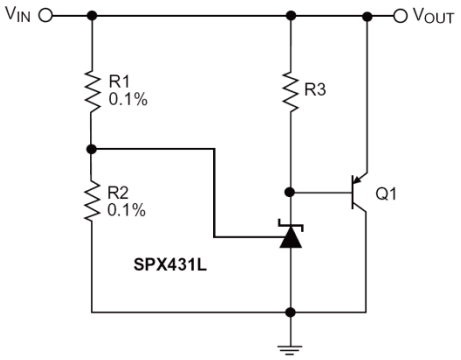

Fig. 122 High Current Shunt regulator

$V_{OUT} = (1+R1/R2)V_{REF}$

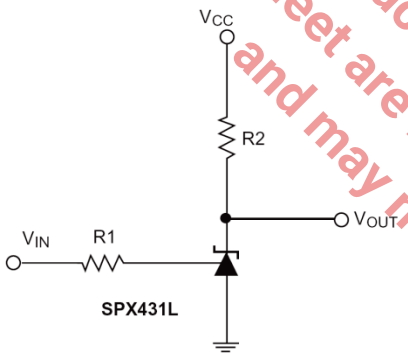

Fig. 133 Single Supply Comparator with Temperature Compensated Threshold. V_{IN} threshold = 2.5V.

The product (or products) mentioned in this data sheet are no longer being manufactured and may not be ordered (OBS)

APPLICATION INFORMATION

CALCULATING AVERAGE TEMPERATURE COEFFICIENT (TC)

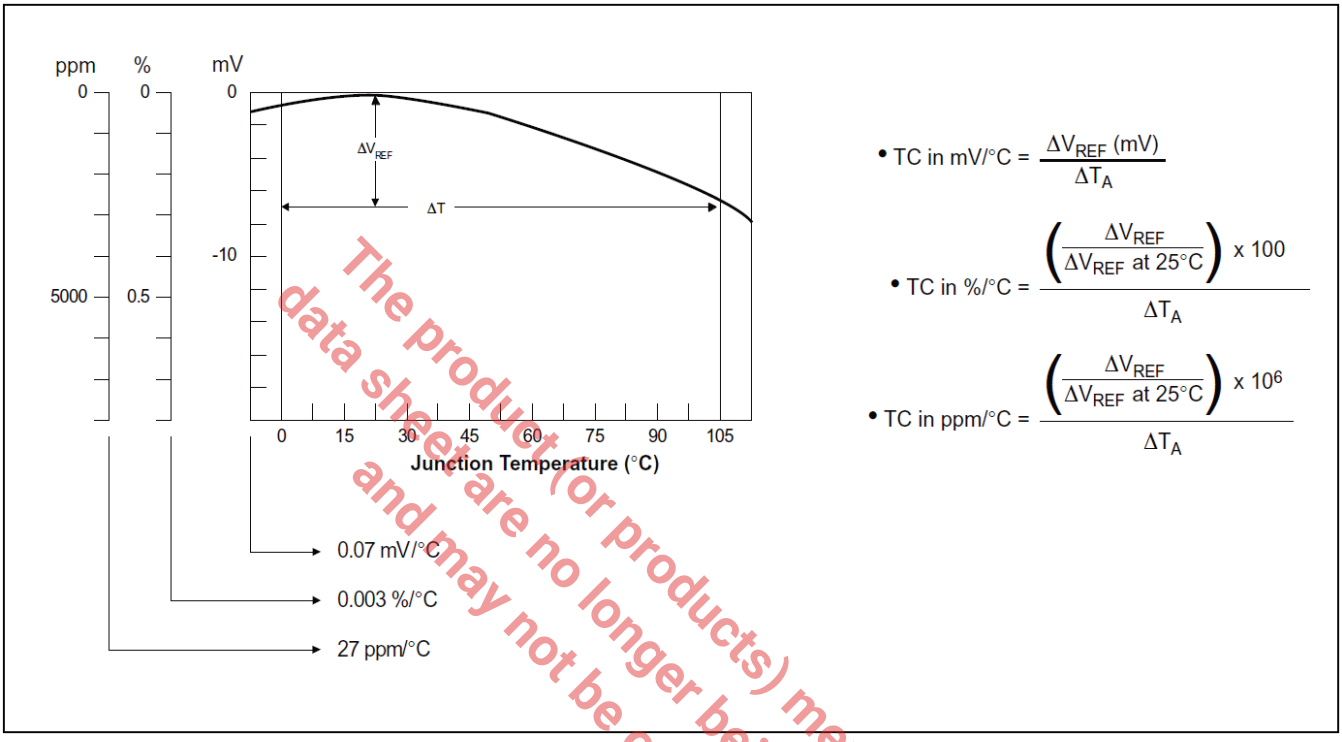

Fig. 24: V_{REF} VS Temperature.

The product (or products) mentioned in this data sheet are no longer being manufactured and may not be ordered (OBS)

TEST CIRCUITS

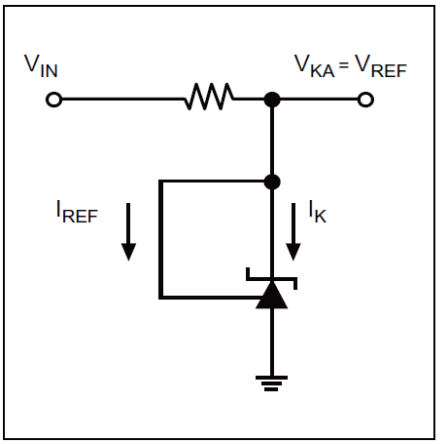

Fig. 25: Test Circuit for $V_{KA} = V_{REF}$

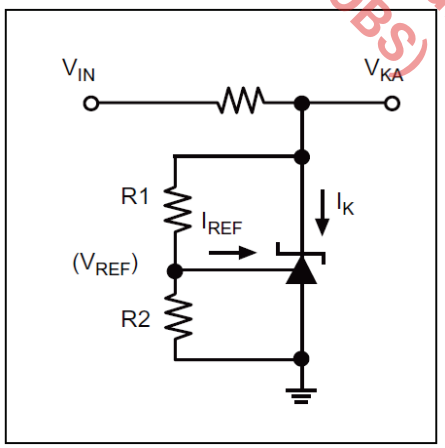

Fig. 26: Test Circuit for $V_{KA} > V_{REF}$

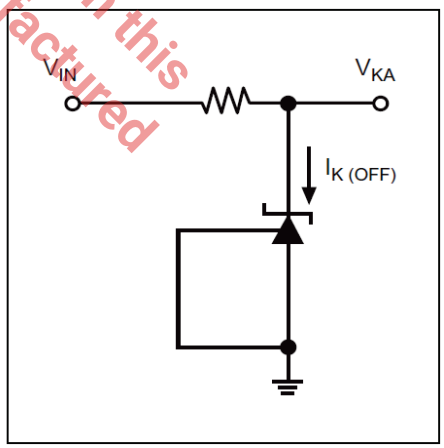

Fig. 27: Test Circuit for I_{KOFF}

PACKAGE SPECIFICATION

3 PIN TO-92

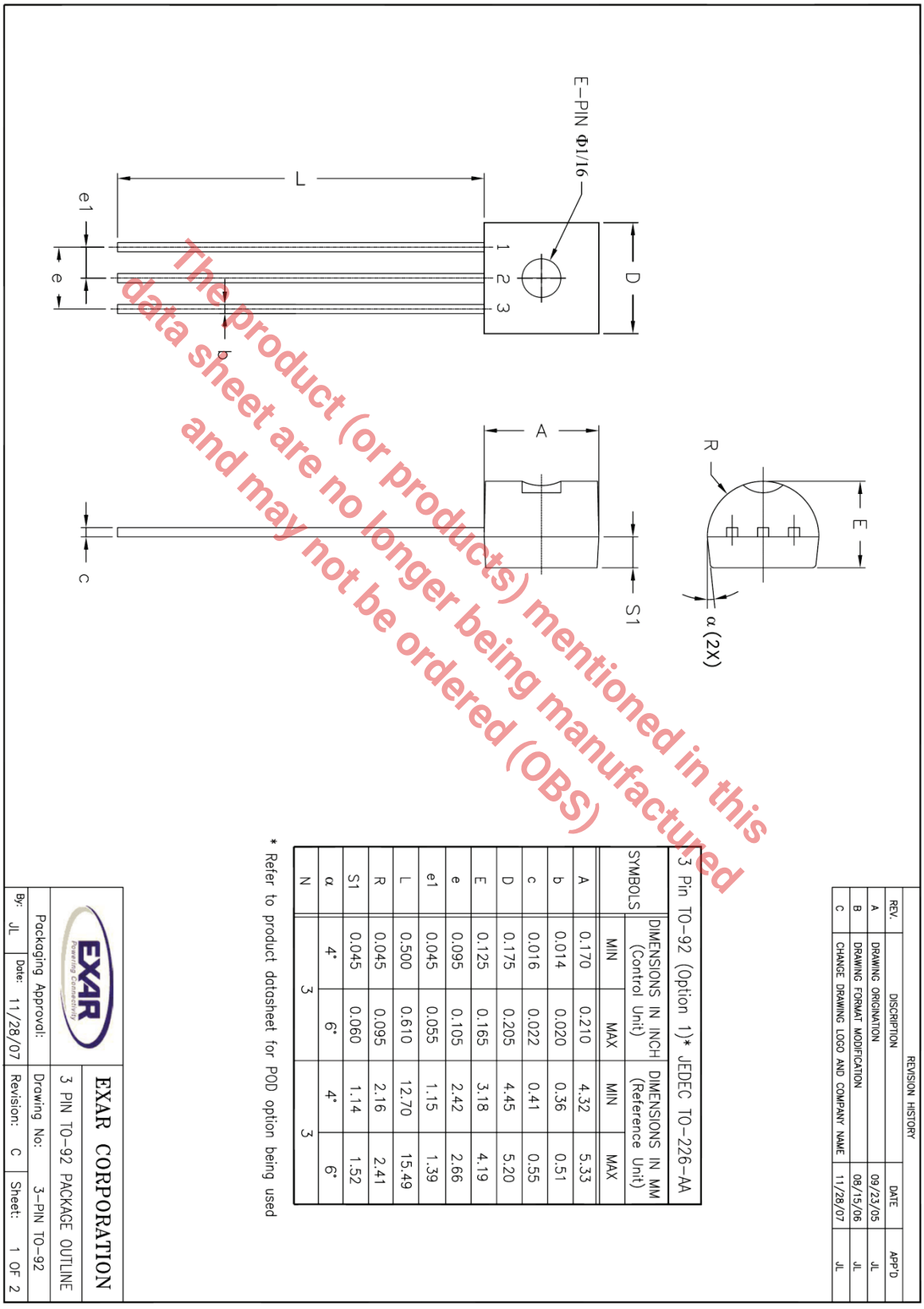

The product (or products) mentioned in this data sheet are no longer being manufactured and may not be ordered (OBS)

REVISION HISTORY			
REV.	DISCRIPTION	DATE	APP'D
A	DRAWING ORIGINATION	09/23/05	JL
B	DRAWING FORMAT MODIFICATION	08/15/06	JL
C	CHANGE DRAWING LOGO AND COMPANY NAME	11/28/07	JL

3 Pin TO-92 (Option 1)* JEDEC TO-226-AA

SYMBOLS	DIMENSIONS IN INCH (Control Unit)		DIMENSIONS IN MM (Reference Unit)	
	MIN	MAX	MIN	MAX
A	0.170	0.210	4.32	5.33
b	0.014	0.020	0.36	0.51
c	0.016	0.022	0.41	0.55
D	0.175	0.205	4.45	5.20
E	0.125	0.165	3.18	4.19
e	0.095	0.105	2.42	2.66
e1	0.045	0.055	1.15	1.39
L	0.500	0.610	12.70	15.49
R	0.045	0.095	2.16	2.41
S1	0.045	0.060	1.14	1.52
α	4°	6°	4°	6°
N	3		3	

* Refer to product datasheet for POD option being used

EXAR CORPORATION

3 PIN TO-92 PACKAGE OUTLINE

Packaging Approval:	Drawing No: 3-PIN TO-92	
By: JL	Date: 11/28/07	Revision: C	Sheet: 1 OF 2

PACKAGE SPECIFICATION

3 PIN SOT-89

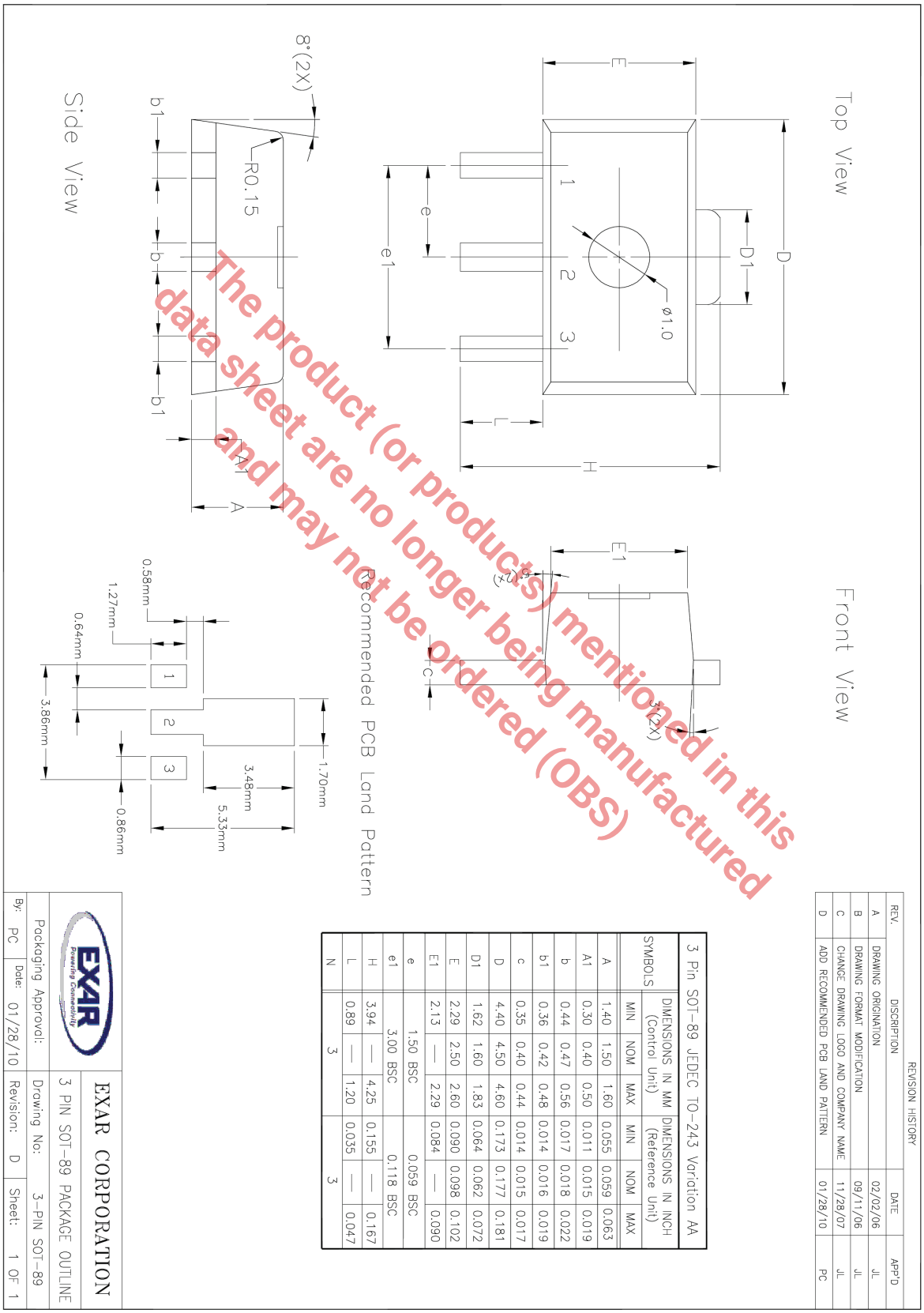

The product (or product(s) mentioned in this data sheet are no longer being manufactured and may not be ordered (OBS)

REV.	DISCRIPTION	DATE	APP'D
A	DRAWING ORIGINATION	02/02/06	JL
B	DRAWING FORMAT MODIFICATION	09/11/06	JL
C	CHANGE DRAWING LOGO AND COMPANY NAME	11/28/07	JL
D	ADD RECOMMENDED PCB LAND PATTERN	01/28/10	PC

REVISION HISTORY

3 Pin SOT-89 JEDEC TO-243 Variation AA

SYMBOLS	DIMENSIONS IN MM (Control Unit)			DIMENSIONS IN INCH (Reference Unit)		
	MIN	NOM	MAX	MIN	NOM	MAX
A	1.40	1.50	1.60	0.055	0.059	0.063
A1	0.30	0.40	0.50	0.011	0.015	0.019
b	0.44	0.47	0.56	0.017	0.018	0.022
b1	0.36	0.42	0.48	0.014	0.016	0.019
c	0.35	0.40	0.44	0.014	0.015	0.017
D	4.40	4.50	4.60	0.173	0.177	0.181
D1	1.62	1.60	1.83	0.064	0.062	0.072
E	2.29	2.50	2.60	0.090	0.098	0.102
E1	2.13	—	2.29	0.084	—	0.090
e	1.50 BSC			0.059 BSC		
e1	3.00 BSC			0.118 BSC		
H	3.94	—	4.25	0.155	—	0.167
L	0.89	—	1.20	0.035	—	0.047
N	3			3		

EXAR CORPORATION

3 PIN SOT-89 PACKAGE OUTLINE

Packaging Approval: | Drawing No: 3-PIN SOT-89

By: PC | Date: 01/28/10 | Revision: D | Sheet: 1 OF 1

REVSION HISTORY

Revision	Date	Description
2.0.0	06/12/2012	Reformatted Datasheet. Corrected Package Drawing
2.0.1	07/19/2013	Update package marking information and updated corporate logo.

The product (or products) mentioned in this data sheet are no longer being manufactured and may not be ordered (OBS)

FOR FURTHER ASSISTANCE

Email: customersupport@exar.com

Exar Technical Documentation: http://www.exar.com/TechDoc/default.aspx?

EXAR CORPORATION

HEADQUARTERS AND SALES OFFICES

48720 Kato Road

Fremont, CA 94538 - USA

Tel.: +1 (510) 668-7000

Fax: +1 (510) 668-7030

www.exar.com

NOTICE

EXAR Corporation reserves the right to make changes to the products contained in this publication in order to improve design, performance or reliability. EXAR Corporation assumes no responsibility for the use of any circuits described herein, conveys no license under any patent or other right, and makes no representation that the circuits are free of patent infringement. Charts and schedules contained here in are only for illustration purposes and may vary depending upon a user's specific application. While the information in this publication has been carefully checked; no responsibility, however, is assumed for inaccuracies.

EXAR Corporation does not recommend the use of any of its products in life support applications where the failure or malfunction of the product can reasonably be expected to cause failure of the life support system or to significantly affect its safety or effectiveness. Products are not authorized for use in such applications unless EXAR Corporation receives, in writing, assurances to its satisfaction that: (a) the risk of injury or damage has been minimized; (b) the user assumes all such risks; (c) potential liability of EXAR Corporation is adequately protected under the circumstances.

Reproduction, in part or whole, without the prior written consent of EXAR Corporation is prohibited.