SP6683

1X/1.5X High Efficiency Charge Pump LED Driver for Flash or Backlight

FEATURES

- Output Current up to 200mA
- Ideal for White LED driver in CellPhone Flash
- 0.5μA Shutdown Current
- 1x/1.5x Mode Charge Pump
- +2.7V to +5.5V Input Voltage Range
- Built-in 1.2MHz Oscillator
- 0.5mA Quiescent Current
- Over Temperature Protection
- Shorted LED Protection
- Programmable Output Current or Voltage
- PWM Dimming Control via Enable Pin
- Soft Start to limit In-Rush Current
- Space Saving 10-pin 3 x 3mm DFN Package
- Three Options for Optimizing Efficiency:
  - SP6683 - MOSFET discharge in shutdown
  - SP6683-03 - High Impedance in shutdown
  - SP6683-LV - Low Voltage (150mV)V_{FB} Reference

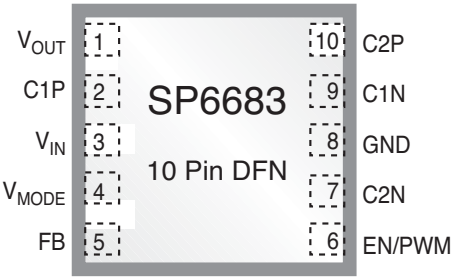

Now Available in Lead Free Packaging

APPLICATIONS

- Mobile Phone
- Camera Flash Driver
- PDA
- Digital Still Camera
- Digital Camcorder
- Color LCD Module

The product (or products) mentioned in this datasheet are no longer being manufactured and may not be ordered. (OBS)

DESCRIPTION

The SP6683 is a high power current regulated charge pump ideal for converting a Li-Ion battery input for driving up to 8 white LED's used in backlighting color displays. The SP6683 operates with an internal 1.2MHz clock, enabling the use of small external components. Output current can be accurately regulated by modulating the switcher between the charge pump and output capacitor. In shutdown mode, the SP6683 discharges the output to ground and draws less than 500nA current. Offered in 10-pin DFN package, the SP6683 family includes three options that allow the user to optimize LED driving circuit: SP6683-LV with low voltage reference, SP6683-03 with high impedance output in shutdown, and SP6683 with pulled down output in shutdown.

TYPICAL APPLICATION SCHEMATIC

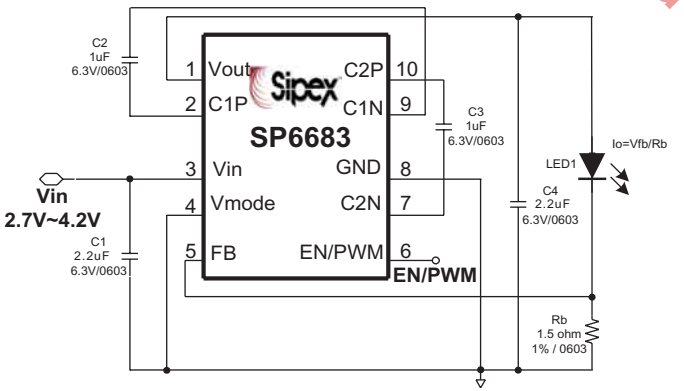

 © Copyright 2006 Sipex Corporation

ABSOLUTE MAXIMUM RATINGS

V_{IN}, V_{MODE}, V_{OUT} and EN/PWM ..... -0.3V to 6V
Output Current (I_{OUT}) 300mA
Power Dissipation per Package - 10-pin DFN
(derate 8.84mW/°C above +70°C) 1.2W
Junction Temperature ..... +125°C
Storage Temperature ..... -65°C to +150°C
ESD Rating. ..... 2kV HBM

These are stress ratings only and functional operation of the device at these ratings or any other above those indicated in the operation sections of the specifications below is not implied. Exposure to absolute maximum rating conditions for extended periods of time may affect reliability.

ELECTRICAL CHARACTERISTICS

Unless otherwise specified: V_{IN} = 3.6V, C1 = C4 = 2.2µF & C2 = C3 = 1µF (Ceramic, ESR=0.03Ω) and T_{AMB} =25°.

The ♦ denotes specifications which apply over full operating temperature range -40ºC to +85ºC.

The product (or products) mentioned in this data sheet are no longer being manufactured and may not be ordered (OBS)

Parameter	Min.	Typ.	Max.	Units		Conditions
Input Voltage	2.7		5.5	V	♦	
Quiescent Current		0.5	3	mA	♦	V_{IN} = 3.0 - 5.5V, V_{OUT} = 3.6V, Iout = 100µA
Shutdown Current		0.5	1.5	µA	♦	V_{EN}/PWM = 0.0V, V_{IN} = 5.5V
Maximum Load Current		200		mA		V_{IN} = 4.2V, Vout = 3.6V
Oscillator Frequency	0.7	1.2	1.5	MHz	♦	V_{IN} = 2.7 - 5.5V
V_{FB} Reference Voltage	0.283	0.315	0.347	V	♦	I_{OUT} = 20mA, V_{OUT} = 3.6V, 1.5X Mode
Output Resistance		8	13	Ω	♦	1.5X Mode, 100mA Load
		3	6		♦	1.0X Mode, 100mA Load
V_{MODE} Threshold Voltage	1.00	1.25	1.50	V		V_{IN} Falling
V_{MODE} Hysteresis		60	150	mV		V_{IN} = 3.6V
V_{MODE} Pin Current		0.01	0.5	µA	♦	V_{MODE} = 1.25 V
EN/PWM Logic Low			0.4	V	♦	
EN/PWM Logic High	1.6			V	♦	
EN/PWM Pin Current		0.01	0.5	µA	♦	V_{EN}/PWM = 4.2V
FB Pin Current		0.01	0.5	µA	♦	V_{FB} = 1V
V_{OUT} Ripple		80		mV		V_{OUT} = 4V, I_{OUT} = 100mA ,1.5x Mode
V_{OUT} Turn-On Time		250	500	µs	♦	FB within 90% regulation 1.5X Mode, V_{OUT} = 3.6, I_{OUT} = 100µA

 © Copyright 2006 Sipex Corporation

PIN DESCRIPTION

PIN NUMBER	PIN NAME	DESCRIPTION
1	V_{OUT}	Regulated charge pump output.
2	C1P	Positive terminal to the charge pump flying capacitor C2.
3	V_{IN}	Input supply voltage.
4	V_{MODE}	Charge pump mode program pin. When V_{MODE} is greater than 1.25V, a X1 charge pump is used. Otherwise, charge pump switches to X1.5 mode. A voltage divider shown in the typical application circuit programs the V_{IN} threshold for charge pump mode switching.
5	FB	This is the feedback pin for output current or voltage regulation. The voltage of this pin is compared with an internal 315mV reference.
6	EN/PWM	Enable and PWM dimming control input. Pull this pin low to disconnect V_{OUT} from V_{IN} and shutdown the SP6683.V_{OUT} is pulled to ground in shutdown.
7	C2N	Negative terminal to the charge pump flying capacitor, C4.
8	GND	Ground reference.
9	C1N	Negative terminal to the charge pump flying capacitor, C2.
10	C2P	Positive terminal to the charge pump flying capacitor C4.

The product (or products) mentioned in this data sheet are no longer being manufactured and may not be ordered (OBS)

FUNCTIONAL DIAGRAM

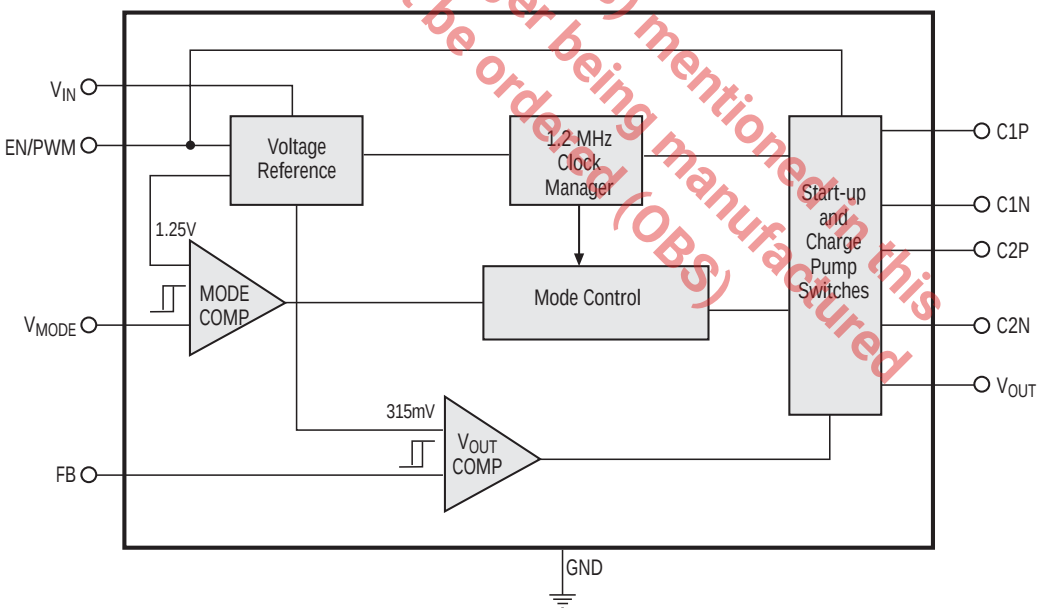

 © Copyright 2006 Sipex Corporation

TYPICAL PERFORMANCE CHARACTERISTICS (25°C)

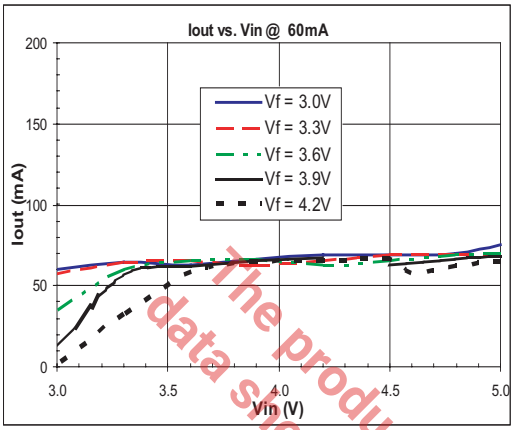

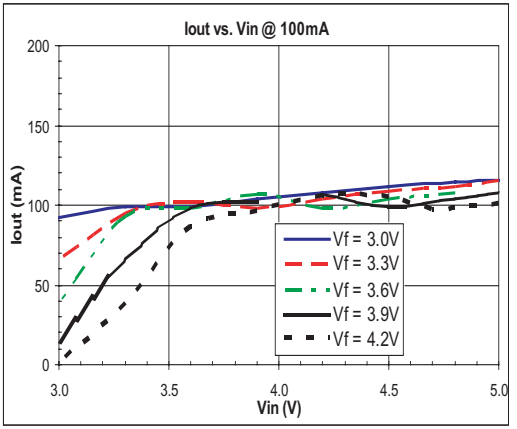

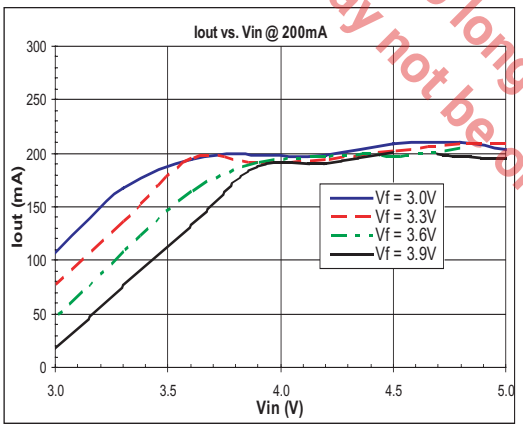

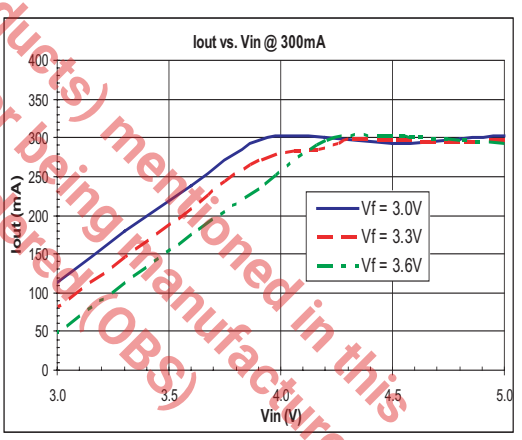

The product (or products) mentioned in this data sheet are no longer being manufactured and may not be ordered (OBS)

 © Copyright 2006 Sipex Corporation

TYPICAL PERFORMANCE CHARACTERISTICS (25°C)

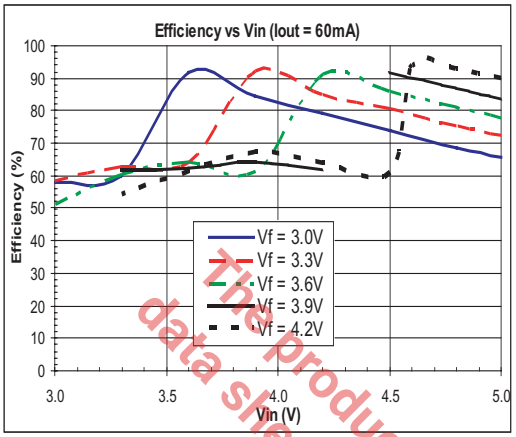

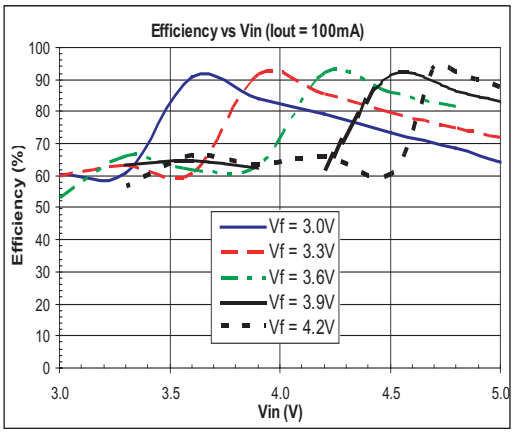

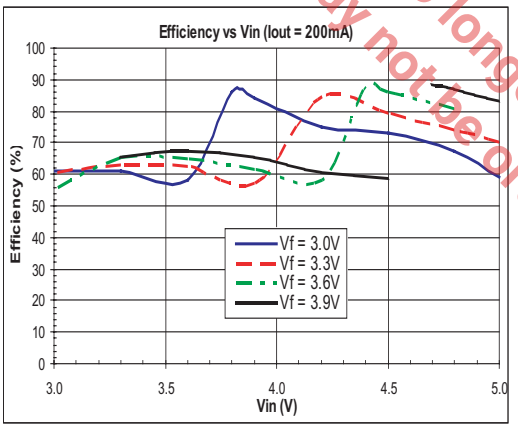

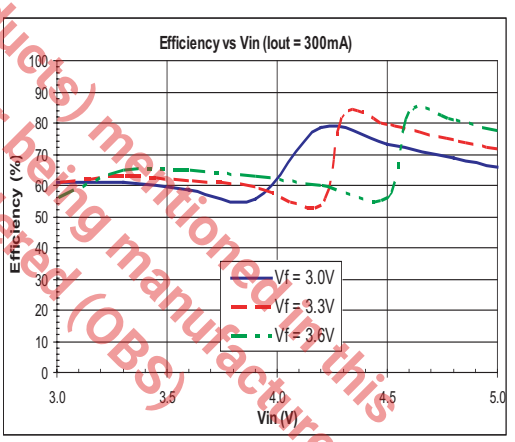

This product (or products) mentioned in this data sheet are no longer being manufactured and may not be ordered (OBS)

 © Copyright 2006 Sipex Corporation

General Overview

The SP6683 is a current regulated charge pump ideal for converting a Li-Ion battery input for driving white LEDs used in camera flash or backlighting color displays in cellular phones, PDAs, digital cameras and MP3 players. The SP6683 is able to efficiently drive one 200mA Flash LED or up to eight 20mA white LEDs in parallel and maintain a constant brightness over a very wide operating voltage range (2.7V to 5.5V). The SP6683 operates with an internal 1.2MHz clock, enabling the use of small external components. Other features of SP6683 include PWM dimming control as well as complete input/output disconnect in shutdown. In shutdown mode the IC typically draws 500nA current. The output regulation is achieved by sensing the voltage at the feedback pin and modulating the switch between the charge pump and output capacitor.

Theory of Operation

The SP6683 regulated charge pump block diagram consists of four main blocks (Voltage Reference, Mode Control, Clock Manager, Start-up and Charge-Pump Switches) and two comparators (V_{MODE} Comparator and V_{OUT} Comparator).

1) Voltage Reference. This block provides the 315mV and 1.25V reference voltages needed for the two comparators.

2) Mode Control. An external voltage divider connected to the V_{MODE} pin will define an input voltage to the mode comparator which sets the logic state of the mode selection outputs to the X1 or X1.5 modes. V_{MODE} is compared to a 1.25V bandgap voltage. For example, if one makes a 158K/100K divider, the mode will change at 2.58 x 1.25 V = 3.23V. A comparator-based cycle by cycle regulation ensures that no mode change occurs during cycles.

3) Clock Manager. An internal 1.2MHz clock is generated in this block. Depending on the mode control, the appropriate clock phasing is generated here and sent to the startup and charge pump switches block.

4) V_{OUT} Comparator & Output Control. A 315mV reference voltage is compared to feedback voltage to control the V_{OUT} needed for the application. Output current is set by a bias resistor from the FB pin to the GND pin chosen by the relationship:

$$I_{OUT} = \frac{V_{FB}}{R_{FB}}$$

where V_{FB} = 315mV.

The product (or products) mentioned in this data sheet are no longer being manufactured and may not be ordered (OBS)

 © Copyright 2006 Sipex Corporation

Configuring as Cellphone Camera Flash Driver

SP6683 is capable of delivering up to 200mA current, which is perfect to drive the most common LEDs in today's market. It is designed to work in the cell phone camera flash which powers up directly from the Lithium-Ion battery.

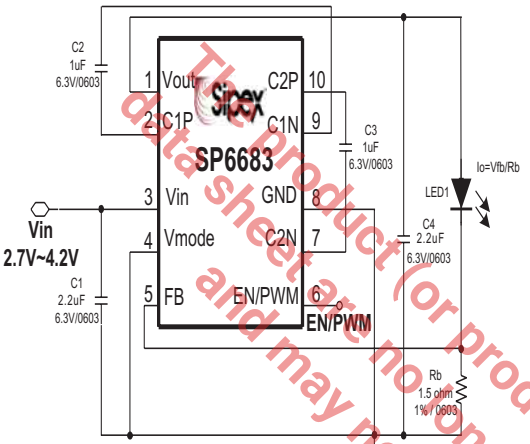

Camera Flash Application

Configuring as LCD Backlight

The SP6683 is able to efficiently drive up to eight 20mA white LEDs in parallel and maintain a constant brightness over a very wide operating voltage range (2.7V to 5.5V)

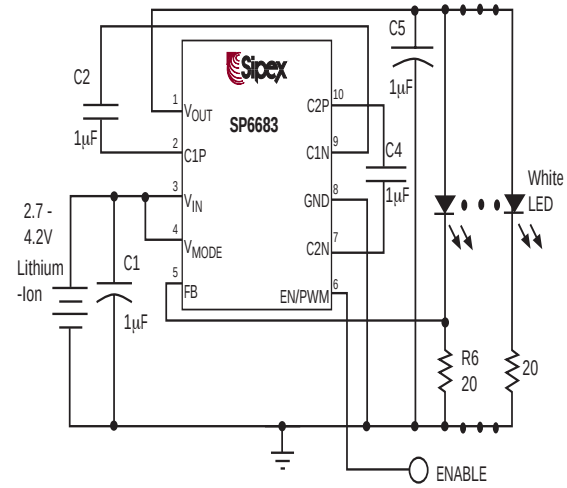

LCD Backlight Application

Configuring as Camera Flash + Torch Driver

The SP6683 can be configured as a flash/ torch LED driver which in some applications require constant torch current used for motion pictures (i.e. movie mode).

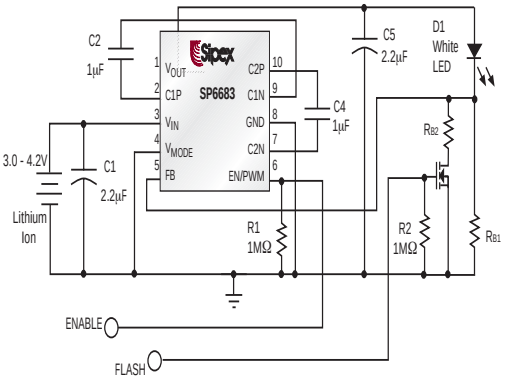

Camera Flash/Torch Application

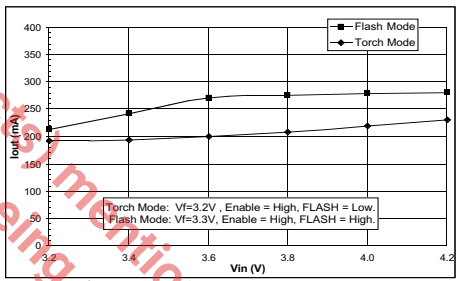

I_{OUT} *vs.* V_{IN}

Programming X1 or X1.5 Operating Mode

For simplest application circuitry, SP6683's mode can be fixed by connecting V_{MODE} to V_{IN} for X1 mode or connecting V_{MODE} to GND for X1.5 mode. The SP6683 can automatically change from X1 mode to X1.5 to maximize efficiency. To use this feature, divider resistors should be chosen according to the specific application, as shown below.

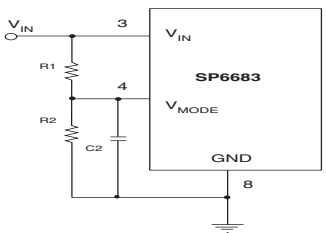

Programming the Vmode Resistors

The product (or products) mentioned in this data sheet are no longer being manufactured and may not be ordered (OBS)

 © Copyright 2006 Sipex Corporation

Configuring the SP6683 as Voltage or Current Source

The white LED load configuration used by customers can be discrete white LEDs or a white LED module. Inside the white LED module, there may or may not be resistors in series with the white LEDs. According to the different application requirements, the SP6683 can be configured as either a voltage source or a current source to provide solutions for these different applications, as shown below. The figure shows the SP6683 driving discrete white LEDs as a current source.

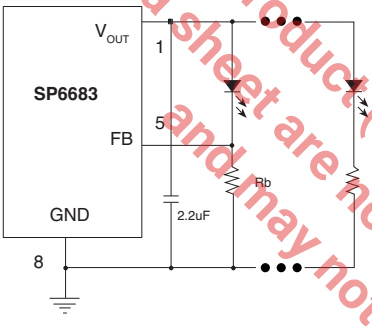

Driving discrete white LEDs as current source

The current in one white LED current is set by the ratio of the feedback pin voltage (315mV) and the bias resistor R_B. To set the operating current, R_B can be selected by:

$$R_B = \frac{V_{FB}}{I_{LED}}$$

The current of the remaining white LEDs is set according to the similarity of the white LEDs. 3-wire white LED modules with internal series resistors (as shown in figure below) can also be driven in this way.

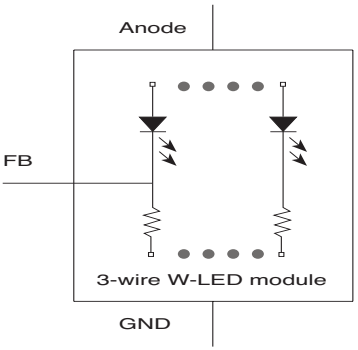

3-wire white LED module

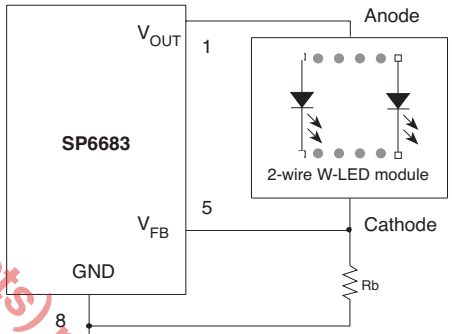

Driving 2-wire white LED module as current source

In the figure above, the SP6683 was used to drive a 2-wire white LED module (without internal series resistors) as a current source. The bias resistor R_B is selected to regulate the total current of the white LED module instead of the current of a single LED as in the figure showing the 3 wire white LED module.

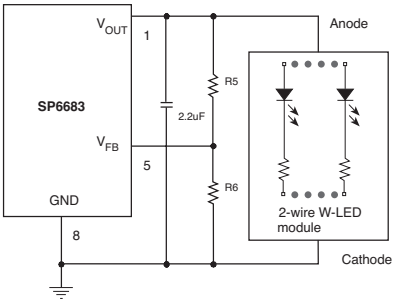

Driving 2-wire white LED module as voltage source

The product (or products) mentioned in this data sheet are no longer being manufactured and may not be ordered (OBS)

 © Copyright 2006 Sipex Corporation

In this application, the bias resistor can be selected by:

$$R_B = \frac{V_{FB}}{I_{LED\ (TOTAL)}}$$

where $I_{LED(TOTAL)}$ is the total operating current of all the white LEDs.

To use SP6683 as a voltage source for fixed voltage applications, a voltage divider is need to program the output voltage, as shown in the figure above. The output voltage is set by the ratio of the two resistors and the feedback control voltage as shown by:

$$V_{OUT} = \left(1 + \frac{R_5}{R_6}\right) \bullet V_{FB}$$

Brightness Control Using PWM

Dimming control can be achieved by applying a PWM control signal to the EN/PWM pin. The brightness of the white LEDs is controlled by increasing and decreasing the duty cycle of the PWM signal. While operating frequency range is from 60Hz to 700Hz, the recommended maximum brightness frequency range is from 60Hz to 200Hz. A repetition rate of at least 60Hz is required to prevent flicker.

Three Options for Optimization

The SP6683 family includes three options that allow the user to optimize the LED driving circuit. The SP6683 includes an on-board discharge switch that ensures that V_{OUT} is completely discharged in shutdown. This feature is very useful in systems using PWM dimming, when the SP6683 is periodically turned on and off. The discharge switch ensures that the falling and rising edges of the LED current have similar durations.

The SP6683-03ER has the discharge MOSFET disabled ensuring that the output node is at high impedance during shutdown. This can be useful if the system is feeding LED current from another source while the SP6683 is in shutdown.

The SP6683-LV offers a lower reference voltage that allows to reduce efficiency loss occurring in the current sense resistor. This part is ideal for driving single LEDs for Flash applications.

Reducing Component Count

It is possible to reduce the number of external components by shorting pins 2 & 9 and omitting the flying capacitor. In this mode, the charge pump operates in a "quasi" doubler mode. This reduces efficiency but does allow for one less external capacitor. This circuit is recommended only when Input and Output Voltages have similar range, which is very common when driving white LEDs from a Li-Io battery.

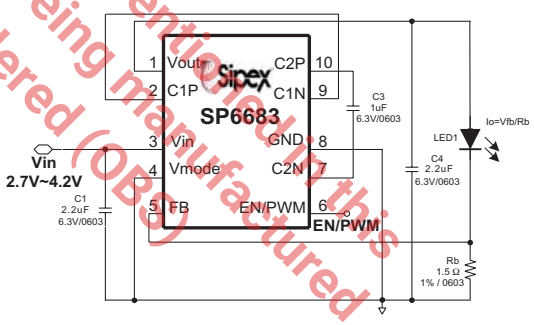

Flying Cap Removed

This product (or products) mentioned in this data sheet are no longer being manufactured and may not be ordered (OBS)

 © Copyright 2006 Sipex Corporation

Component Selection

The guideline for selecting divider resistors is as follows. For high input voltage, the SP6683 will work in X1 mode. When the input voltage drops to V_{TH} threshold voltage, it will switch to X1.5 mode automatically. The V_{TH} threshold voltage for mode change can be calculated by:

$$V_{TH} = (V_F + 0.315 + m \bullet I_{LED} \bullet R_{OUT})$$

Where V_F and m are the forward voltage and number of the white LEDs, Rout is the output resistance of the SP6683.

The equation for the voltage divider R_1 and R_2 with V_{MODE} = 1.25V is:

$$V_{TH} = 1.25V \bullet (1+R_1/R_2)$$

Which can be expressed as R_1:

$$R_1 = \left[(V_{TH}/1.25) - 1\right] R_2$$

For the typical SP6683 application, using V_F = 3.6V, m = 8, I_{LED} = 15mA, R_{OUT} = 6Ω, V_{TH} will be 4.63V, Select R_2 = 100kΩ, then R_1 = 270kΩ

Ceramic capacitors are recommended for their inherently low ESR, which will help produce low peak-to-peak output ripple, and reduce high frequency spikes.

The fly capacitor controls the strength of the charge pump. Selection of the fly capacitor is a tradeoff between the output voltage ripple and the output current capability. Decreasing the fly capacitor will reduce the output voltage ripple because less charge will be delivered to the output capacitor. However, a smaller fly capacitor leads to larger output resistance, thus decreasing the output current capability and the efficiency of the circuit. Increasing the value of the input and output capacitors could further reduce the input and output ripple. For backlighting applications up to 80mA output current, C_{IN} = C_{OUT} = 1µF is typically used. For applications with more than 80mA output current, for example in Flash applications where Iout can be as much as 200mA, C_{IN} = C_{OUT} = 2.2µF is recommended. For peak performance, place all capacitors as close to the SP6683 as possible.

Refer to table 1 below for some suggested low ESR capacitors.

The product (or products) mentioned in this datasheet are no longer being manufactured and may not be ordered (OBS)

SUGGESTED LOW ESR CAPACITORS

Manufacturers/ Website	Part Number	Capacitance/ Voltage	Capacitor Size/Type/Thickness	ESR at 100KHz
TDK/www.tdk.com	C1005X5R0J105M	1uF/6.3V	0402/X5R/0.5mm	0.03
TDK/www.tdk.com	C1608X5R0J225K	2.2uF/6.3V	0603/X5R/0.9mm	0.02
Murata/www.murata.com	GRM155R60J105KE19B	1uF/6.3V	0402/X5R/0.55mm	0.03
Murata/www.murata.com	GRM188R61A225KE34B	2.2uF/6.3V	0603/X5R/0.9mm	0.02

 © Copyright 2006 Sipex Corporation

Brightness Matching

For white LEDs, the forward voltage drop is a function of the operating current. However, for a given current, the forward voltage drop across each LED does not always match exactly. This can cause uneven brightness in the white LEDs.

In the figure below, assuming high-precision bias resistors were used, the operating current ratio of two different branches can be easily derived as shown by:

$$\frac{I_1}{I_2} = \frac{V_{OUT} - V_{F1}}{V_{OUT} - V_{F2}}$$

where I_1 & I_2 are the operating current of the white LEDs, where V_{F1} & V_{F2} are the forward voltage of the white LEDs.

Since the brightness of the white LED is proportional to the operating current, for better brightness matching, a higher output voltage could be used. This could be done by using a larger resistor, as shown in the figure below. Rb2 is used to bias the operating current of the white LED, Rb1 is use to increase the output voltage. Better brightness matching was achieved at the cost of the power wasted on the bias resistor.

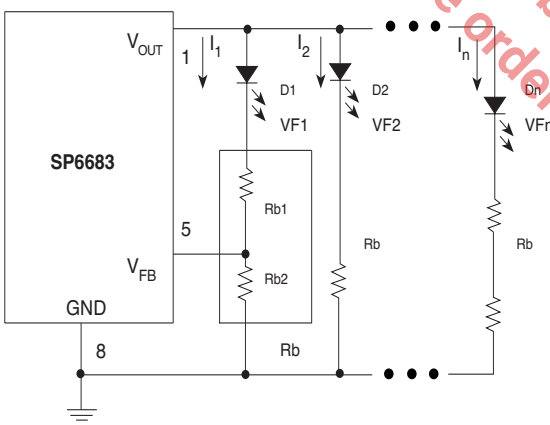

Improving brightness matching

Power Efficiency

The efficiency of driving the white LEDs can be calculated by

$$\eta = \frac{V_F \bullet I_F}{V_i \bullet I_i} = \frac{V_F \bullet I_F}{V_i \bullet (n \bullet I_F + I_Q)} \approx \frac{V_F}{V_i \bullet n}$$

Where

V_i & I_i are input voltage and current;

V_F & I_F are the forward voltage and operating current of the White LED;

I_Q is quiescent current, which is considered small compared with I_F.

The product (or products) mentioned in this data sheet are no longer being manufactured and may not be ordered (OBS)

 © Copyright 2006 Sipex Corporation

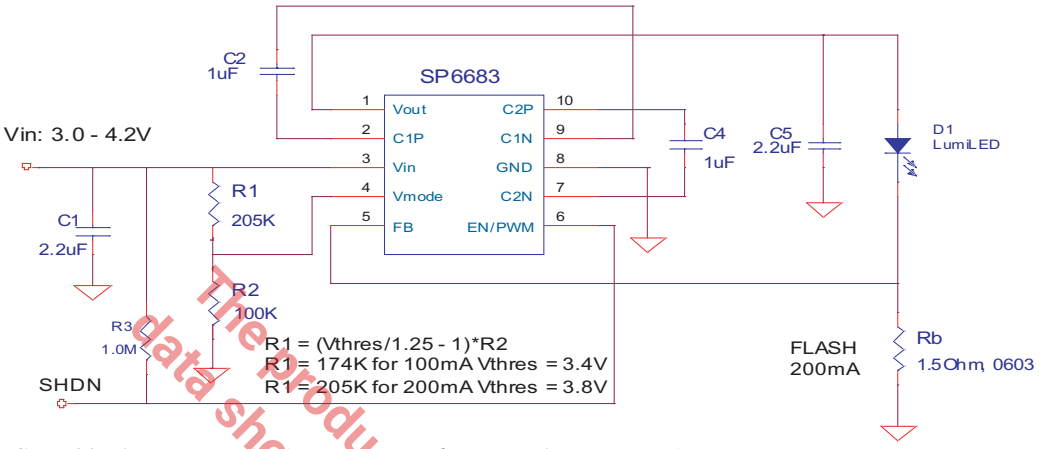

SP6683 Li-Ion Input in 1x to 1.5X mode to LumiLED PWF1

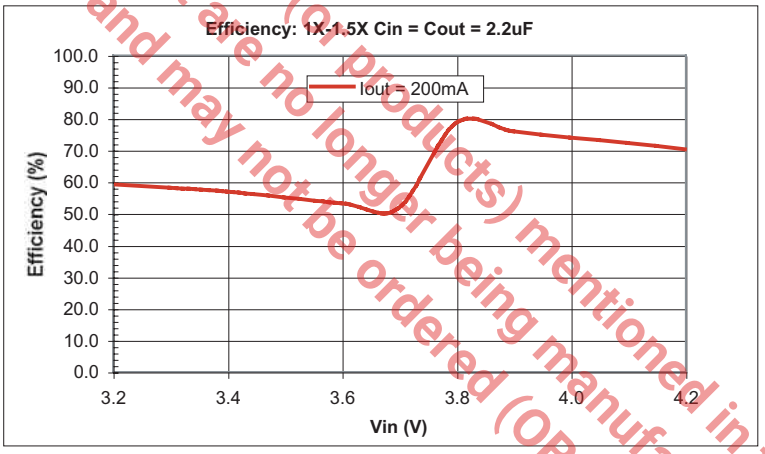

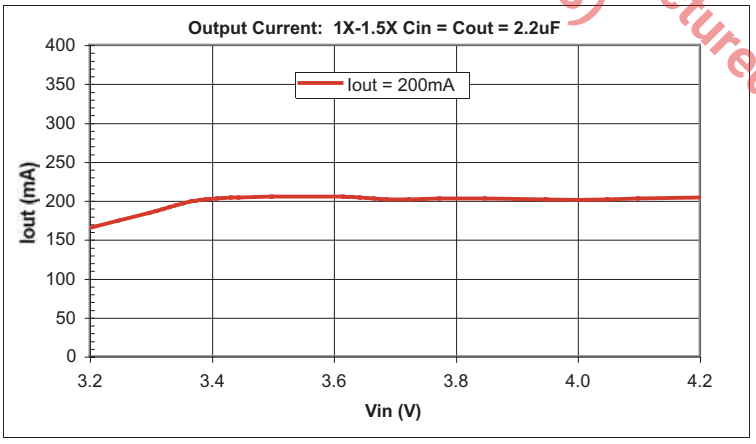

The product (or products) mentioned in this data sheet are no longer being manufactured and may not be ordered (OBS)

 © Copyright 2006 Sipex Corporation

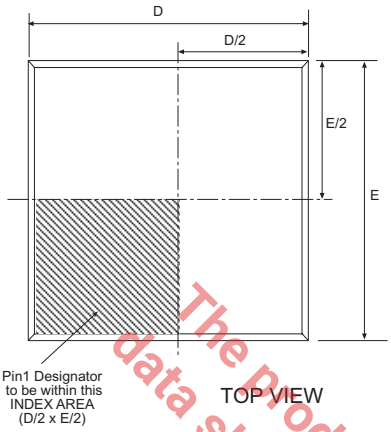

TOP VIEW

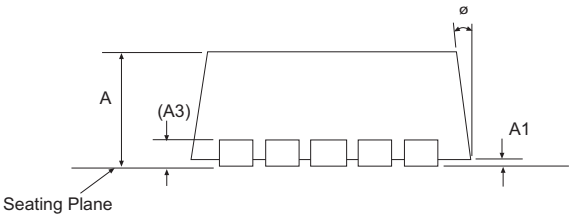

SIDE VIEW

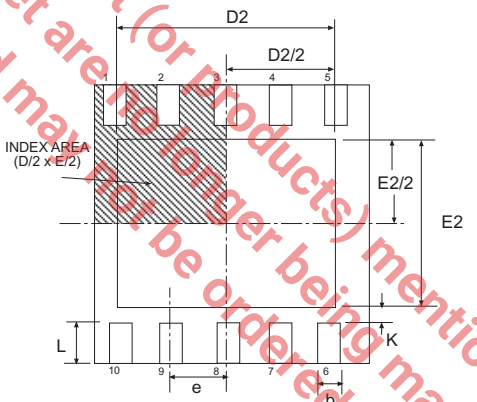

BOTTOM VIEW

The Product (or Products) mentioned in this data sheet are no longer being manufactured and may not be ordered (OBS)

3x3 10 Pin DFN	JEDEC MO-229			VARIATION VEED-5		
SYMBOL	Dimensions in Millimeters: Controlling Dimension			Dimensions in Inches Conversion Factor: 1 Inch = 25.40 mm		
	MIN	NOM	MAX	MIN	NOM	MAX
A	0.80	0.90	1.00	0.032	0.036	0.039
A1	0.00	0.02	0.05	0.000	0.001	0.002
A3		0.20 REF			0.008 REF	
K	0.20	-	-	0.008	-	-
ø	0º	-	14º	0º	-	14º
b	0.18	0.25	0.30	0.008	0.010	0.012
D		3.00 BSC			0.119 BSC	
D2	2.20	-	2.70	0.087	-	0.106
E		3.00 BSC			0.119 BSC	
E2	1.40	-	1.75	0.056	-	0.069
e		0.50 BSC			0.020 BSC	
L	0.30	0.40	0.50	0.012	0.016	0.020
SIPEX Pkg Signoff Date/Rev:				JL Aug09-05 / RevA		

 © Copyright 2006 Sipex Corporation

Part Number	Operating Temperature Range	Package Type
SP6683ER	-40°C to +85°C	10 Pin DFN
SP6683ER/TR	-40°C to +85°C	10 Pin DFN
SP6683-03ER	-40°C to +85°C	10 Pin DFN
SP6683-03ER/TR	-40°C to +85°	10 Pin DFN
SP6683ER-L	-40°C to +85°C	(Lead Free) 10 Pin DFN
SP6683ER-L/TR	-40°C to +85°C	(Lead Free) 10 Pin DFN
SP6683-03ER-L	-40°C to +85°C	(Lead Free) 10 Pin DFN
SP6683-03ER-L/TR	-40°C to +85°C	(Lead Free) 10 Pin DFN

***Contact factory for availability of the following parts**

SP6683LVER	-40°C to +85°C	10 Pin DFN
SP6683LVER/TR	-40°C to +85°C	10 Pin DFN

/TR = Tape and Reel

Pack quantity is 3000 for DFN.

The product (or products) mentioned in this data sheet are no longer being manufactured and may not be ordered (OBS)

Solved By Sipex™

Sipex Corporation

Headquarters and Sales Office
233 South Hillview Drive
Milpitas, CA 95035
TEL: (408) 934-7500
FAX: (408) 935-7600

Sipex Corporation reserves the right to make changes to any products described herein. Sipex does not assume any liability arising out of the application or use of any product or circuit described herein; neither does it convey any license under its patent rights nor the rights of others.