GENERAL DESCRIPTION

The SP6682 is a current regulated charge pump ideal for converting a Li-Ion battery input for driving white LEDs used in backlighting color displays or cell phone camera flash applications.

The charge pump automatically switches between x1.5 and x2 modes based on the program-mable VMODE voltage, providing improved efficiency over traditional methods using charge pump doubler followed by LDO. This input voltage threshold can be externally programmed by a resistor divider network for optimized efficiency at specific output voltages and currents.

The SP6682 operates with an internal 600kHz clock, which reduces switching noise and improves V_{OUT} ripple. Output current or voltage can be accurately regulated by modulating the switcher between the charge pump and output capacitor. In shutdown mode, the IC disconnects the output from the input and draws less than 1.5µA current.

The SP6682 is offered in a 10-pin MSOP package, and a small 10-Pin DFN Package.

APPLICATIONS

- **Mobile Phones & PDAs**
- **3.3V to 5V Conversion**
- **Palmtop Computers**
- **Color LCD Modules**

FEATURES

- **200mA Output Current**
- **Low Profile Inductorless Regulator**
  - 600KHz Oscillator
  - x1.5 and x2 Conversion Modes
- **2.7V to 5.5V Input Voltage Range**
- **Fast Turn-on Time 175µs**
- **1mA Quiescent Current**
- **Adjustable Output Current and Voltage**
- **PWM Dimming Control**
- **True Shutdown Disconnect**
- **Soft Start**
- **10-pin MSOP and 10-pin DFN Packages**

The product(or products) mentioned in this datasheet are no longer being manufactured and may not be ordered (OBS)

TYPICAL APPLICATION DIAGRAM

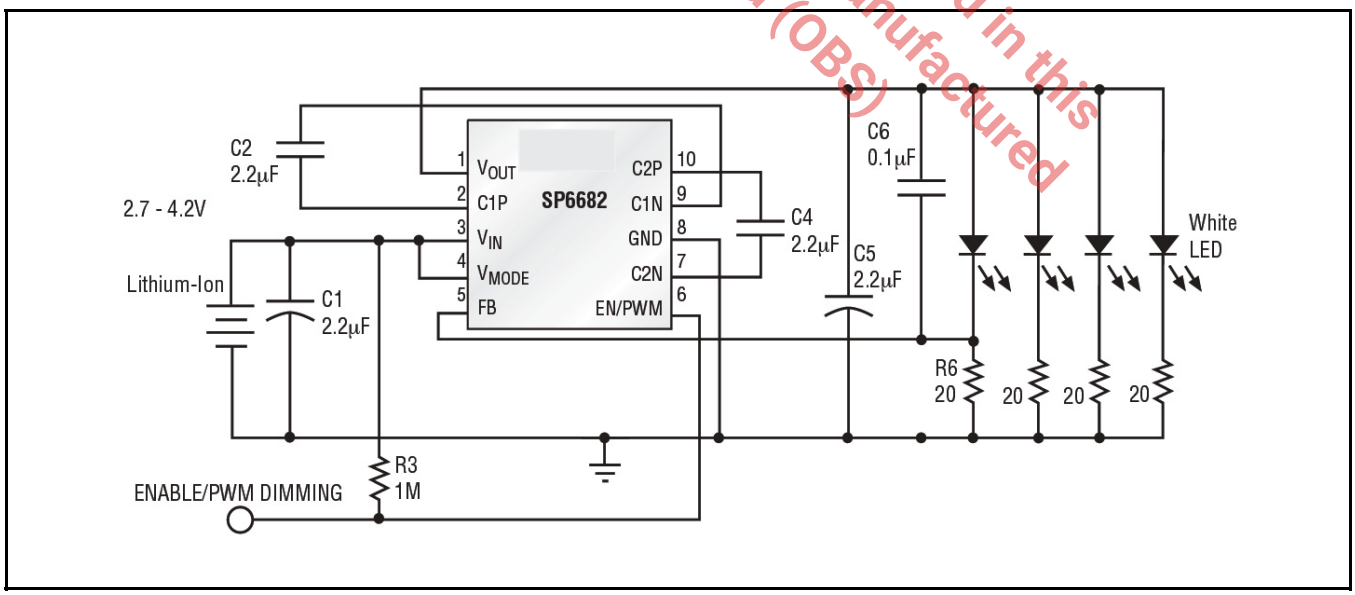

Fig. 1: SP6682 LCD Backlighting Application Diagram

ABSOLUTE MAXIMUM RATINGS

These are stress ratings only and functional operation of the device at these ratings or any other above those indicated in the operation sections of the specifications below is not implied. Exposure to absolute maximum rating conditions for extended periods of time may affect reliability.

V_{IN}, V_{MODE}, V_{OUT}, EN/PWM ..... -0.3V to 6.0V
V_{IN} - V_{OUT} 0.7V

Output Current I_{OUT} 300mA
Power Dissipation (10-pin MSOP)
(derated 8.84mW/°C above +70°C) 720mW
Junction Temperature Range ..... +125°C
Storage Temperature .....-65°C to 150°C
ESD Rating (HBM - Human Body Model) 2kV

ELECTRICAL SPECIFICATIONS

Specifications with standard type are for an Operating Ambient Temperature of T_A = 25°C only; limits applying over the full Operating Ambient Temperature range are denoted by a "•". Minimum and Maximum limits are guaranteed through test, design, or statistical correlation. Typical values represent the most likely parametric norm at T_A = 25°C, and are provided for reference purposes only. Unless otherwise indicated, V_{IN} = 2.7V to 5.0V, C_1=C_2=C_4=C_5=2.2µF (ceramic, ESR=0.03Ω), C_3=0.1µF (ceramic), T_A= –40°C to 85°C.

Parameter	Min.	Typ.	Max.	Units		Conditions
Input Voltage	2.7		5.5	V	•	
Quiescent Current		1.2	3	mA	•	V_{IN}=4.2V, V_{OUT}=3.6V, I_{OUT}=100 µA
Shutdown Current			1.5	µA	•	EN/PWM=0V, V_{IN}=5.5V
Oscillator Frequency	0.42	0.60	0.78	MHz	•	V_{IN}=3.6V
VFB Reference Voltage	0.275	0.306	0.337	V	•	
Charge Pump Output Resistence		11	18	Ω	•	FB=0V, V_{IN}=3.6V, I_{OUT}=20mA, V_{MODE}=High
V_{MODE} Threshold Voltage	1.15	1.25	1.35	V		V_{IN} falling @ 25°C
Hysteresis for Mode Transition Voltage		30		mV_{PP}		V_{IN} = 3.6V @ 25°C
V_{MODE} Pin Current		0.01	0.5	µA	•	V_{MODE}=1.25V
EN/PWM Logic Low			0.4	V	•	
EN/PWM Logic High	1.6			V	•	
EN/PWM Pin Current		0.01	0.5	µA	•	$V_{EN/PWM}$=4.2V
FB Pin Current			0.5	µA	•	V_{FB}=1V
V_{OUT} Turn-On Time		175	500	µs	•	V_{IN}=3.6V, FB within 90% regulation

This product (or products) mentioned in this data sheet are no longer being manufactured and may not be ordered (OBS)

PIN ASSIGNEMENT

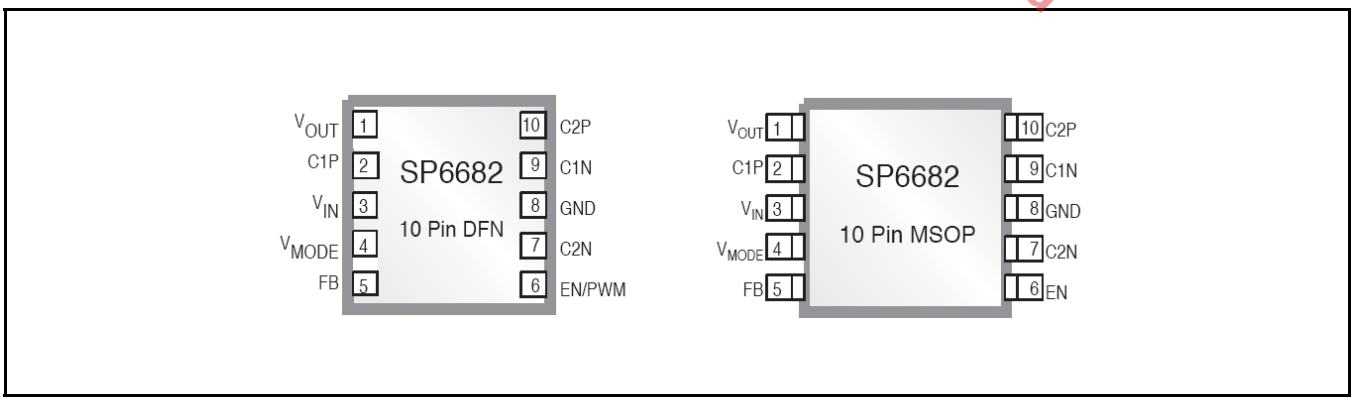

Fig. 2: SP6682 Pin Assignement

ORDERING INFORMATION

Part Number	Temperature Range	Marking	Package	Packing Quantity	Note 1	Note 2
SP6682EU-L	-40°C≤T_A≤+85°C	6682 EXXX YWW	MSOP-10	Bulk	Lead Free	
SP6682EU-L/TR	-40°C≤T_A≤+85°C	6682 EXXX YWW	MSOP-10	2.5K/Tape & Reel	Lead Free	
SP6682ER-L	-40°C≤T_A≤+85°C	SP66 82ER WWX	DFN-10	Bulk	Lead Free	
SP6682ER-L/TR	-40°C≤T_A≤+85°C	SP66 82ER WWX	DFN-10	3K/Tape & Reel	Lead Free	

"Y" = Year – "WW" = Work Week – "X" = Lot Number

The product (or products) mentioned in this data sheet are no longer being manufactured and may not be ordered (OBS)

TYPICAL PERFORMANCE CHARACTERISTICS

All data taken at T_A = 25°C, I_O = 60mA, unless otherwise specified - Schematic and BOM from Application Information section of this datasheet.

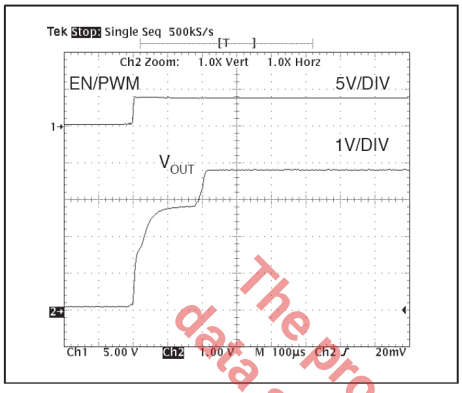

Fig. 3: Output Voltage Turn-on Time

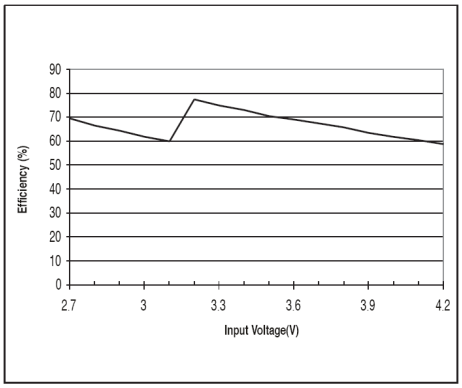

Fig. 4: Power Efficiency vs Input Voltage

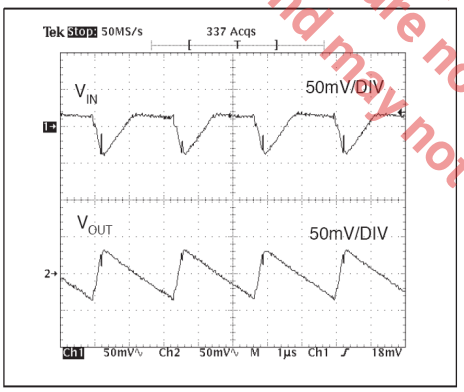

Fig. 5: x2 Mode Voltage Ripple, V_{IN}=2.7V

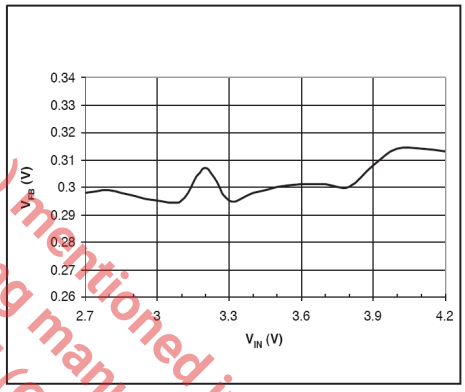

Fig. 6: Feedback Pin Voltage vs. Input Voltage

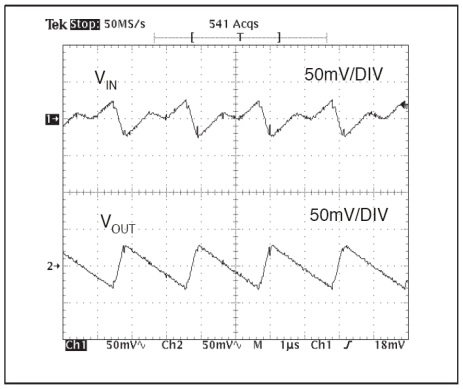

Fig. 7: x1.5 Mode Voltage Ripple, V_{IN}=3.3V

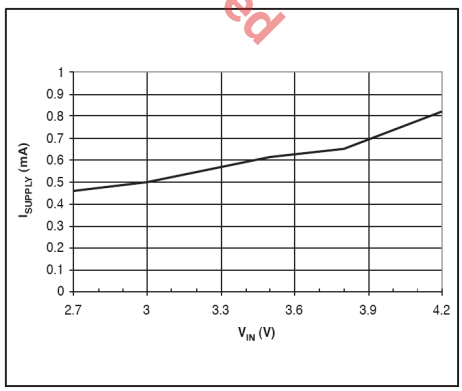

Fig. 8: Quiescent Current vs. Input Voltage

The product (or products) mentioned in this data sheet are no longer being manufactured and may not be ordered (OBS)

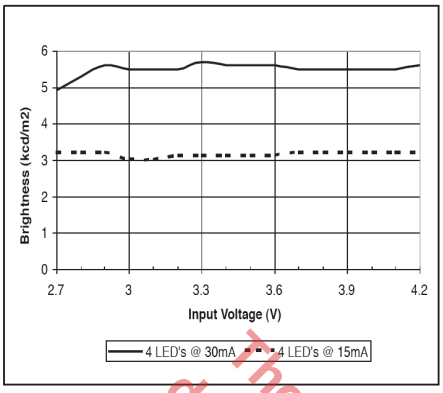

Fig. 9: Brightness vs. Input Voltage

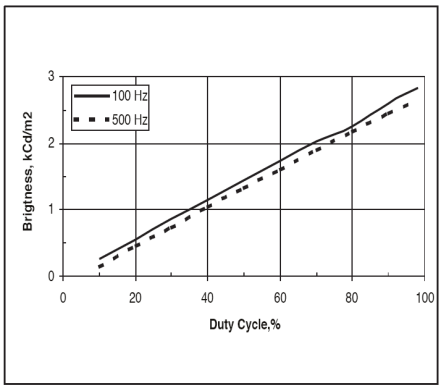

Fig. 10: Brightness vs. Duty Cycle

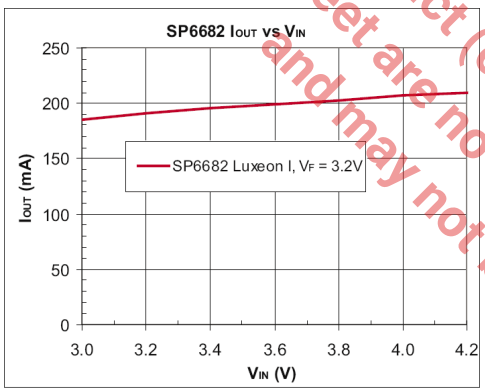

Fig. 11: I_{OUT} vs. V_{IN}

The product (or products) mentioned in this data sheet are no longer being manufactured and may not be ordered (OBS)

THEORY OF OPERATION

OVERVIEW

The SP6682 is a current regulated charge pump ideal for converting a Li-Ion battery input for driving white LEDs used in back-lighting color displays, Cell Phone Camera Flash, PDAs, digital cameras and MP3 players. The SP6682's proprietary AutoBoost feature enables the IC to automatically trans-ition from X1.5 boost mode to X2 boost mode based on battery input voltage for optimal efficiency and performance. The SP6682 is able to efficiently drive up to six 20mA white LEDs in parallel and maintain a constant brightness over a very wide operating voltage range (2.7V to 5.5V). The SP6682 operates with an internal 600kHz clock, enabling the use of small external components. Other features of SP6682 include PWM dimming control as well as complete input/out disconnect in shutdown. In shutdown mode the IC draws less than 1.5µA current. The output regulation is achieved by sensing the voltage at the feedback pin and modulating the switcher between the charge pump and output capacitor.

OPERATION

The SP6682 regulated charge pump block diagram consists of four main blocks (Voltage Reference, Mode Control, Clock Manager, Start-up and Charge-Pump Switches) and two comparators (V_{MODE} Comparator and V_{OUT} Comparator).

Voltage Reference.

This block provides the 306mV and 1.25V reference voltages needed for the two comparators.

Mode Control

An external voltage divider connected to the V_{MODE} pin will define an input voltage to the mode comparator which sets the logic state of the mode selec-tion outputs to the x2 or x1.5 modes. V_{MODE} is compared to a 1.25V bandgap voltage. For example, if one makes a 158KΩ/100KΩ divider, the mode will change at 2.58 x 1.25 V = 3.23V. A comparator-based cycle-by-cycle regulation ensures that no mode change occurs during cycles.

Clock Manager

An internal 600 kHz clock is generated in this block. Depending on the mode control, the appropriate clock phasing is generated here and sent to the start-up and charge-pump switches block.

Start-up and Charge Pump Switches

During start-up, until the reference is established, this block keeps the charge pump inactive. During this period the output stays floating, and by consequence the charge pump drivers are now referenced to VOUT.Charging of the output will occur (e.g. when VIN is ramped up to 4.2V, VOUT ramps only up to about 3V), but not to the value of VIN,protecting the White LEDs from experiencing high input voltages. Another important operation of this block is the PWM/EN dim-ming control, which is implemented in the delay of each pump driver, so that the enable high pulse width is proportional to the delay of the individual pump switches.

V_{OUT} Comparator and Output Control

A 306mV reference voltage is compared to feedback output voltage to control the VOUTneeded for the application. Output current is set by a bias resistor from FB pin to GND pin chosen by the relationship:

$$I_{OUT} = \frac{V_{FB}}{R_{FB}}$$

where V_{FB} = 306mV.

CONFIGURING THE SP6682 AS VOLTAGE OR CURRENT SOURCE

The white LED load configuration used by customers can be discrete white LEDs or a white LED module. Inside the white LED module, there may or may not be resistors in series with the white LEDs. According to the different application requirements, the SP6682 can be configured as either a voltage source or a current source to provide solutions for these

The product (or products) mentioned in this data sheet are no longer being manufactured and may not be ordered (OPS)

different applications, as shown in figures 12-14.

Figure 12 shows a circuit using the SP6682 to drive discrete white LEDs as a current source.

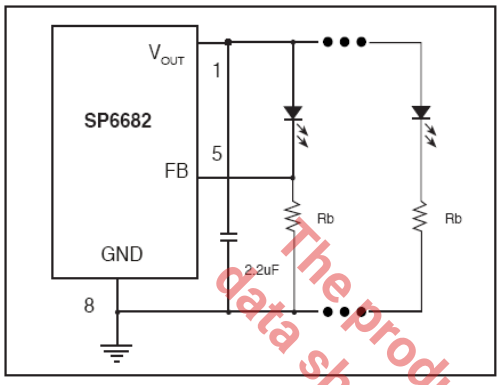

Fig. 12: Driving Discrete White LEDs as Current Source

The current in one white LED current is set by the ratio of the feedback pin voltage (306mV) and the bias resistor RB. To set the operating current, RB can be selected by:

$$R_B = \frac{V_{FB}}{I_{LED}}$$

The current of the remaining white LEDs is set according to the similarity of the white LEDs.

A 3-wire white LED module with internal series resistors as shown in figure 13 can also be driven in this way.

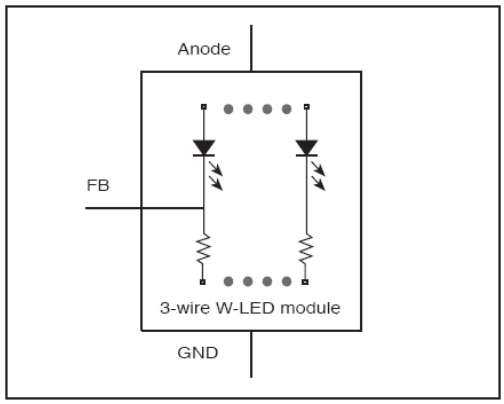

Fig. 13: 3-Wire White LED Module

In Figure 14, the SP6682 was used to drive a 2-wire white LED module without internal series resistors as a current source. The bias resistor RB is selected to regulate the total current of the white LED module in-stead of the current of single LED as in Figure 12.

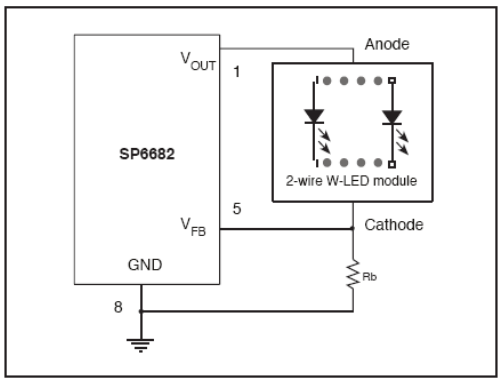

Fig. 14: Driving 2-Wire White LED Module as Current Source

In this application, the bias resistor can be selected by:

$$R_B = \frac{V_{FB}}{I_{LED(TOTAL)}}$$

Where $I_{LED(TOTAL)}$ is the total operating current of all the white LEDs.

To use the SP6682 as a voltage source for fixed voltage applications, a voltage divider is needed to program the ouput voltage, as shown in Figure 15.

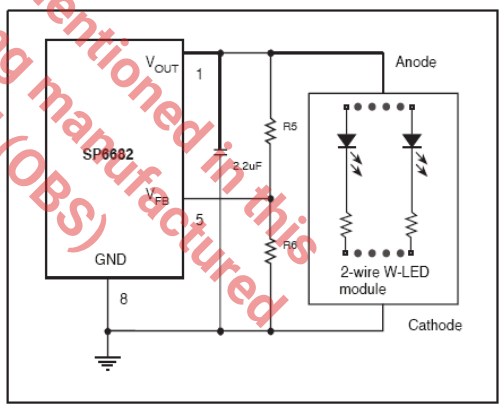

Fig. 15: Driving 2-Wire White LED Module as Voltage Source

The output voltage is set by the ratio of the two resistors and the feedback control voltage as shown by:

$$V_{OUT} = \left(1 + \frac{R_5}{R_6}\right) \times V_{FB}$$

PROGRAMMING THE OPERATING MODE

SP6682 can automatically change from X1.5 mode to X2 mode for highest efficiency. To

The product (or products) mentioned in this data sheet are no longer being manufactured and may not be ordered (OBS)

use this feature, divider resistors should be chosen according to the specific applica-tion, as shown in Figure 16.

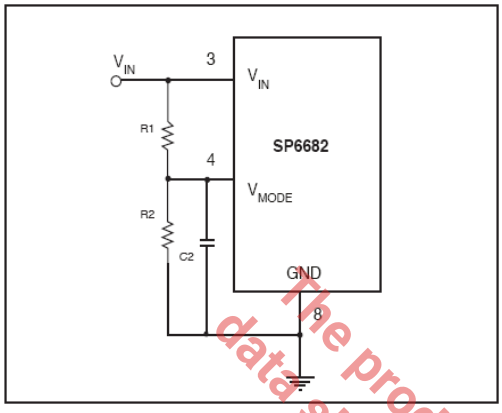

Fig. 16: Programming the V_{MODE} Resistors

The guideline for divider resistor selections is as follows: For high input voltage, the SP6682 will work in X1.5 mode. When the input voltage drops to the V_{TH} threshold voltage, it will switch to X2 mode automati-cally. The V_{TH} threshold voltage for mode change can be calculated by:

$$V_{TH} = \frac{(V_F + 0.306 + M \times I_{LED} \times R_{OUT})}{1.5}$$

Where V_F and M are the forward voltage and number of the white LEDs, R_{OUT} is the output resistance of the SP6682. The equation for the voltage divider R1 and R2 with V_{MODE} = 1.25V is:

$$V_{TH} = 1.25 \times \left(1 + \frac{R1}{R2}\right)$$

which can be expressed as R1:

$$R1 = \left(\frac{V_{TH}}{1.25} - 1\right) \times R2$$

For the typical SP6682 application, using V_F=3.6V, M=4, I_{LED}=15mA, R_{OUT}=16Ω, the V_{TH} will be 3.24V. Select R2=100kΩ, then R1=158kΩ.

Capacitor Selection

Ceramic capacitors are recommended for their inherently low ESR, which will help produce low peak to peak output ripple, and reduce high frequency spikes.

The fly capacitor controls the strength of the charge pump. Selection of the fly capacitor is a trade-off between the output voltage ripple and the output current capability. Decreasing the fly capacitor will reduce the output voltage ripple because less charge will be delivered to the output capacitor. However, smaller fly capacitors lead to larger output resistance, thus decreasing the out-put current capability and the circuit effi-ciency. Place all the capacitors as close to the SP6682 as possible for layout. Increasing the value of the input and output capaci-tors could further reduce the input and out-put ripple.

Refer to Table 1 for some suggested low ESR capacitors.

Manufacturer	Part Number	Capacitance Voltage	Capacitor Size/Type	ESR @ 100KHz
TDK	C2012X5R1A225K	2.2µF/10V	0805/X5R	0.030Ω
TDK	C2012X5R0J475K	4.7µF/6.3V	0805/X5R	0.020Ω
Murata	GRM188R60J225KE01D	2.2µF/6.3V	0805/X5R	0.030Ω
Murata	GRM219R60J475KE01D	4.7µF/6.3V	0805/X5R	0.020Ω

Table 1: Suggested Low ESR Capacitors

Brightness Control Using PWM

Dimming control can be achieved by applying a PWM control signal to the EN/PWM pin. The brightness of the white LEDs is con-trolled by increasing and decreasing the duty cycle of the PWM signal. While the operating frequency range of the PWM control is from 60Hz to 700Hz, the recommended maxim-um brightness frequency range of the PWM signal is from 60Hz to 200Hz. A repetition rate of at least 60Hz is required to prevent flicker.

The product (or product(s) mentioned) in this data sheet are no longer being manufactured and may not be ordered. (OBS)

BRIGHTNESS MATCHING

For white LEDs, the forward voltage drop is a function of the operating current. However, for a given current, the forward voltage drops do not always match due to normal man-ufacturing tolerances, thus causing uneven brightness of the white LEDs.In Figure 15, assume high-precision bias resistors were used, the operating current ratio of two different branches can be easily derived as shown by:

$$\frac{I_1}{I_2} = \frac{V_{OUT} - V_{F1}}{V_{OUT} - V_{F2}}$$

where I_1, I_2 are the operating current of the white LEDs andV_{F1},V_{F2} are the forward volt-age of the white LEDs.

Since the brightness of the white LED is proportional to the operating current, for better brightness matching, a higher output voltage could be used. This could be done by using a larger resistor, as shown in Figure 17. R_{B2} is used to bias the operating current of the white LED, R_{B1} is used to increase the output voltage. Better bright-ness matching was achieved at the cost of the power wasted on the bias resistor.

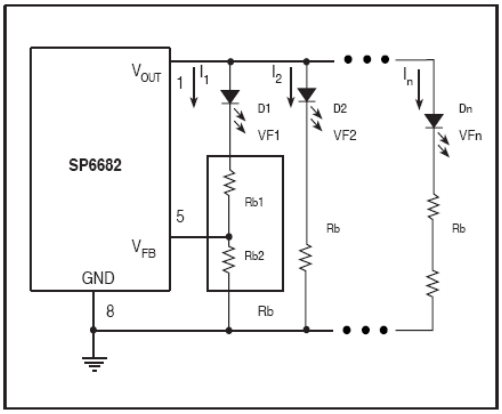

Fig. 17: Increasing Brightness Matching

POWER EFFICIENCY

The efficiency of driving the white LEDs can be calculated by:

$$\eta = \frac{V_F \times I_F}{V_I \times I_I} = \frac{V_F \times I_F}{V_I \times (\eta \times (I_F + I_Q))} = \frac{V_F}{V_I \times \eta}$$

Where V_I, I_I are input voltage and current V_F, I_F are the forward voltage and operating current of White LEDs; I_Q is quiescent current, which is considered small compared with I_F; η is the boost ratio (x1.5 or x2).

SP6682 HIGH VOLTAGE WHITE LED DRIVER

The SP6682 can also be configured as a high voltage boost converter to drive more than 10 white LEDs. Figures 18 and 19 show the schematic of this application as well as actual data showing efficiency of > 85%. By using an external inductor, MOSFET and diode, high output voltages can be generated to drive 12 white LEDs (2 branches, each branch has 6 white LEDs in series). The current through the white LEDs is determined by:

$$I_{LED} = \frac{V_{FB}}{R_1}$$

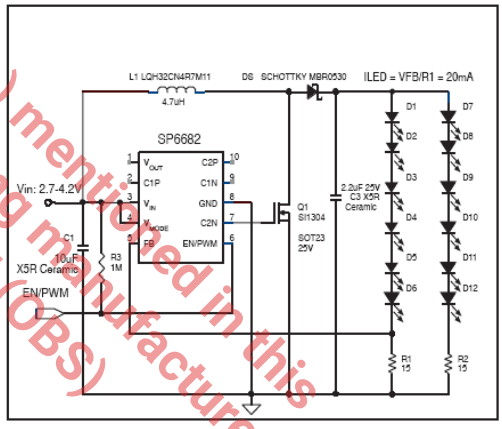

Fig. 18: Using SP6682 as a High Voltage White LED Driver

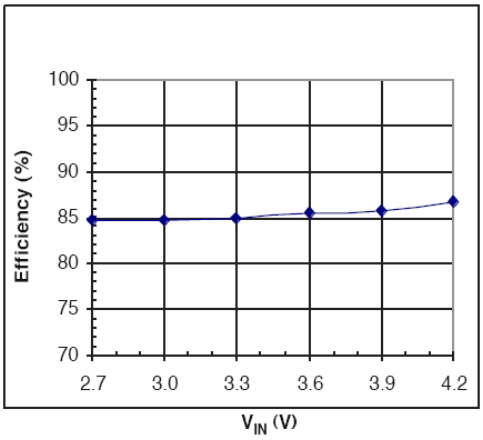

Fig. 19: Efficiency of SP6882
as a High Voltage White LED Driver

The product (or products) mentioned in this data sheet are no longer being manufactured and may not be ordered (OBS)

TYPICAL APPLICATION SCHEMATICS

LCD BACKLIGHT APPLICATION

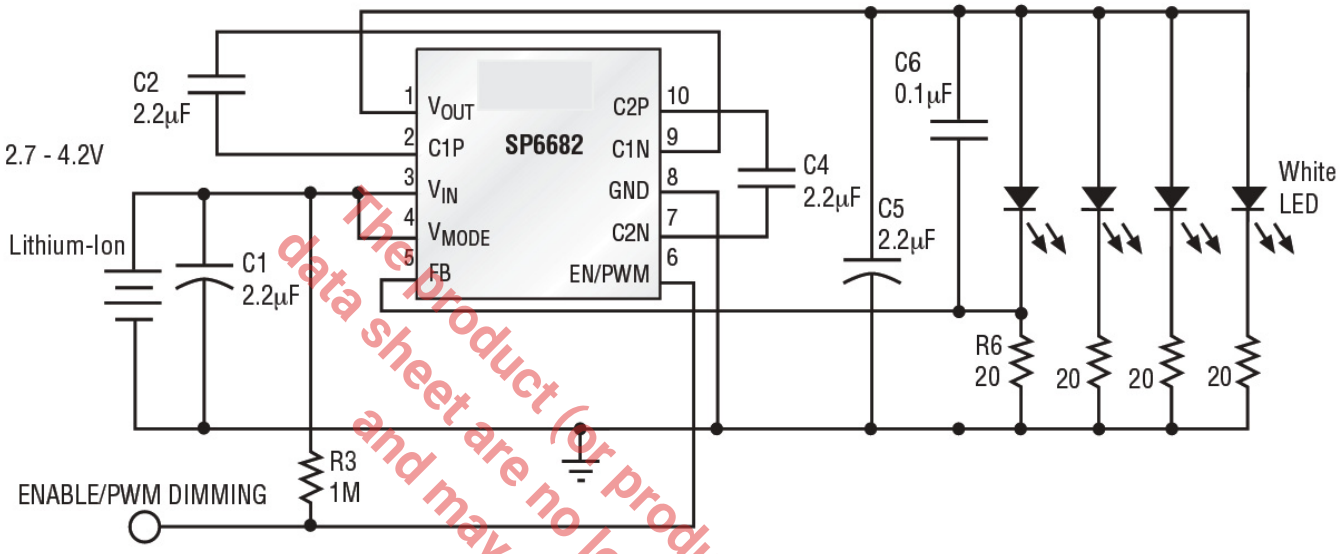

CAMERA FLASH APPLICATION

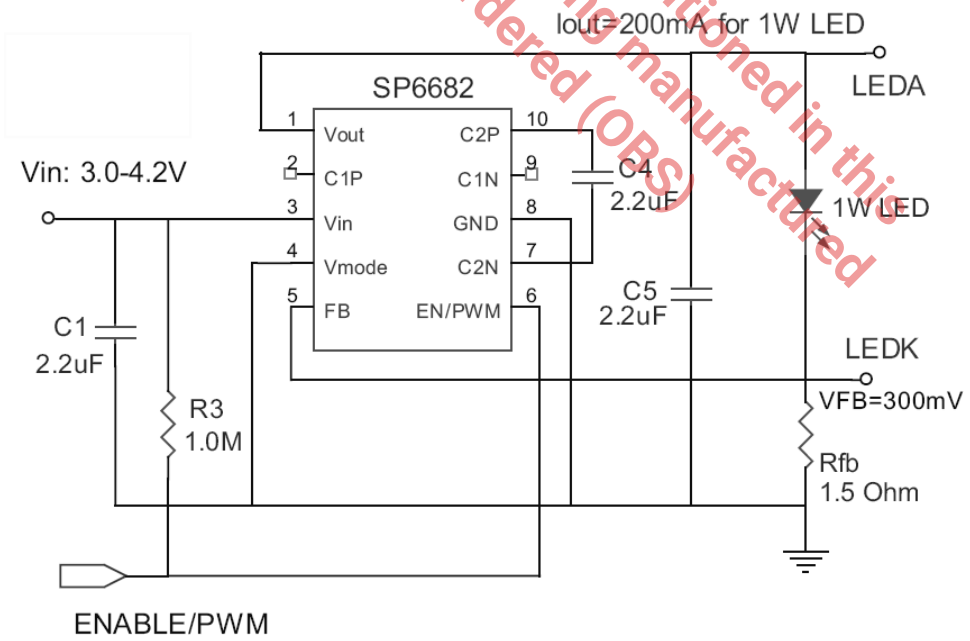

The product (or products) mentioned in this data sheet are no longer being manufactured and may not be ordered (OBS)

PACKAGE SPECIFICATION

10-PIN MSOP

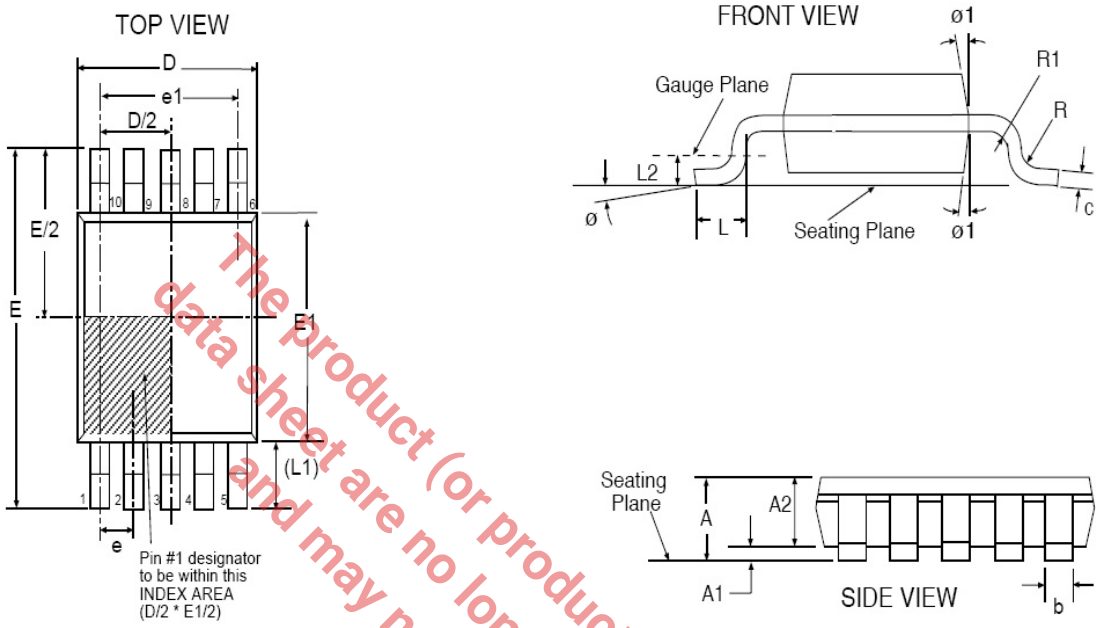

The product (or products) mentioned in this data sheet are no longer being manufactured and may not be ordered (OBS)

10 Pin MSOP JEDEC MO-187 Variation BA						
SYMBOL	Dimensions in Millimeters: Controlling Dimension			Dimensions in Inches Conversion Factor: 1 Inch = 25.40 mm		
	MIN	NOM	MAX	MIN	NOM	MAX
A1	0.00	-	0.15	0.000	-	0.006
c	0.08	-	0.23	0.004	-	0.009
R	0.07	-	-	0.003	-	-
R1	0.07	-	-	0.003	-	-
ø	0°	-	8°	0°	-	8°
ø1	5°	-	15°	5°	-	15°
A	-	-	1.10	-		0.043
A2	0.75	0.85	0.95	0.030	0.034	0.038
b	0.17	-	0.33	0.007	-	0.013
D	3.00 BSC			0.118 BSC		
E	4.90 BSC			0.193 BSC		
E1	3.00 BSC			0.118 BSC		
e	0.50 BSC			0.020 BSC		
e1	2.00 BSC			0.079 BSC		
L	0.40	0.60	0.80	0.016	0.024	0.032
L1	0.95 REF			0.037 REF		
L2	0.25 BSC			0.010 BSC		
Signoff Date/Rev:				JL Aug09-05 RevA		

10-PIN DFN

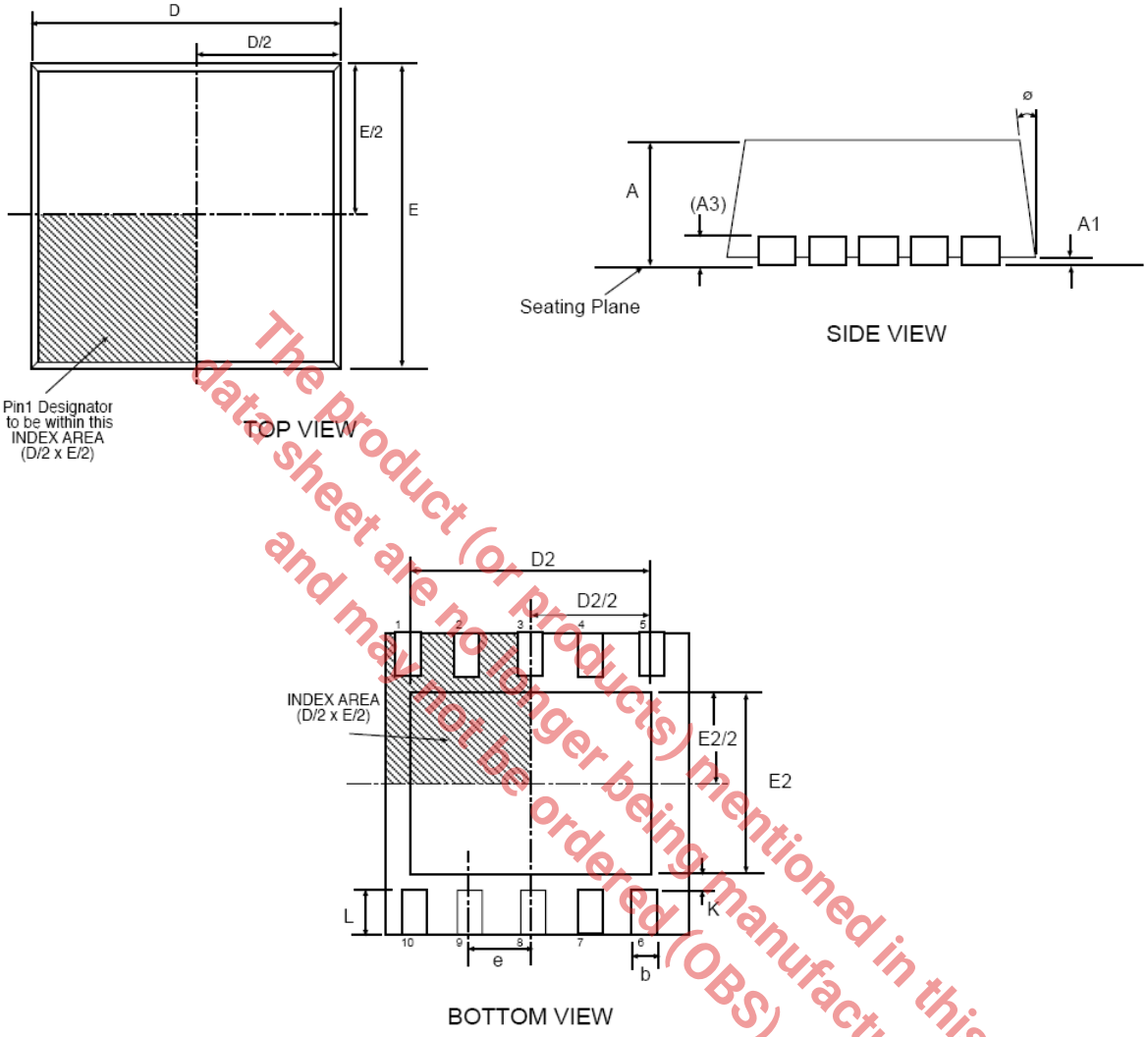

The Product (or Products) mentioned in this data sheet are no longer being manufactured and may not be ordered (OBS)

3x3 10 Pin DFN	JEDEC MO-229			VARIATION VEED-5		
SYMBOL	Dimensions in Millimeters: Controlling Dimension			Dimensions in Inches Conversion Factor: 1 Inch = 25.40 mm		
	MIN	NOM	MAX	MIN	NOM	MAX
A	0.80	0.90	1.00	0.032	0.036	0.039
A1	0.00	0.02	0.05	0.000	0.001	0.002
A3		0.20 REF			0.008 REF	
K	0.20	-	-	0.008	-	-
ø	0°	-	14°	0°	-	14°
b	0.18	0.25	0.30	0.008	0.010	0.012
D		3.00 BSC			0.119 BSC	
D2	2.20	-	2.70	0.087	-	0.106
E		3.00 BSC			0.119 BSC	
E2	1.40	-	1.75	0.056	-	0.069
e		0.50 BSC			0.020 BSC	
L	0.30	0.40	0.50	0.012	0.016	0.020
Pkg Signoff Date/Rev:				JL Aug09-05 / RevA		

REVISION HISTORY

Revision	Date	Description
2.0.0	02/06/09	Reformat of the Datasheet

The product (or products) mentioned in this data sheet are no longer being manufactured and may not be ordered (OBS)

FOR FURTHER ASSISTANCE

Email: customersupport@exar.com

Exar Technical Documentation: http://www.exar.com/TechDoc/default.aspx?

EXAR CORPORATION

HEADQUARTERS AND SALES OFFICES

48720 Kato Road

Fremont, CA 94538 – USA

Tel.: +1 (510) 668-7000

Fax: +1 (510) 668-7030

www.exar.com

NOTICE

EXAR Corporation reserves the right to make changes to the products contained in this publication in order to improve design, performance or reliability. EXAR Corporation assumes no responsibility for the use of any circuits described herein, conveys no license under any patent or other right, and makes no representation that the circuits are free of patent infringement. Charts and schedules contained here in are only for illustration purposes and may vary depending upon a user's specific application. While the information in this publication has been carefully checked; no responsibility, however, is assumed for inaccuracies.

EXAR Corporation does not recommend the use of any of its products in life support applications where the failure or malfunction of the product can reasonably be expected to cause failure of the life support system or to significantly affect its safety or effectiveness. Products are not authorized for use in such applications unless EXAR Corporation receives, in writing, assurances to its satisfaction that: (a) the risk of injury or damage has been minimized; (b) the user assumes all such risks; (c) potential liability of EXAR Corporation is adequately protected under the circumstances.

Reproduction, in part or whole, without the prior written consent of EXAR Corporation is prohibited.