XR16L2751

2.25V TO 5.5V DUART WITH 64-BYTE FIFO AND POWERSAVE

GENERAL DESCRIPTION

The XR16L2751[1] (2751) is a low voltage dual universal asynchronous receiver and transmitter (UART) with 5 Volt tolerant inputs. The device includes 2 additional capabilities over the XR16L2750: Intel and Motorola data bus selection and a "PowerSave" mode to further reduce sleep current to a minimum during sleep mode. The 2751's register set is compatible to the ST16C2550 and XR16C2850 but with added functions. It supports the Exar's enhanced features of 64 bytes of TX and RX FIFOs, programmable FIFO trigger level, FIFO level counters, automatic hardware and software flow control, automatic RS-485 half duplex direction control, and a complete modem interface. Onboard registers provide the user with operational status and data error tags. An internal loopback capability allows onboard diagnostics. Independent programmable baud rate generator is provided in each UART channel to support data rates up to 6.25 Mbps.

NOTE: *1 Covered by U.S. Patent #5,649,122 and #5,949,787*

APPLICATIONS

- Portable and Battery Operated Appliances
- Wireless Access Servers
- Ethernet Network Routers
- Cellular Data Devices
- Telecommunication Network Routers
- Factory Automation and Process Controls

FEATURES

- **2.25 to 5.5 Volt Operation**
- **5 Volt Tolerant Inputs**
- Functionally Compatible to ST16C2550 and XR16C2850 with 4 additional inputs
- **Intel or Motorola Data Bus Interface Select**
- Two Independent UARTs
  - Up to 6.25 Mbps at 5 Volt, 4 Mbps at 3.3 Volt, and 3 Mbps at 2.5 Volt with 8X sampling rate
  - 64 bytes of Transmit and Receive FIFOs
  - Transmit and Receive FIFO Level Counters
  - Programmable TX and RX FIFO Trigger Levels
  - Automatic Hardware (RTS/CTS) Flow Control
  - Selectable RTS Flow Control Hysteresis.
  - Automatic Software (Xoff/Xon) Flow Control
  - Automatic RS-485 2-wire Half-duplex Direction Control to the Transceiver via RTS#
  - Full Modem Interface
  - Infrared Receive and Transmit Encoder/ decoder
- **PowerSave Feature reduces sleep current to 15 µA at 3.3 Volt**
- Device Identification
- Crystal or external clock input
- Industrial and Commercial Temperature ranges
- 48 TQFP Package (7 x 7 x 1.0 mm)

New Product(s) mentioned in this data sheet are no longer being manufactured and may not be ordered (OBS)

FIGURE 1. XR16L2751 BLOCK DIAGRAM

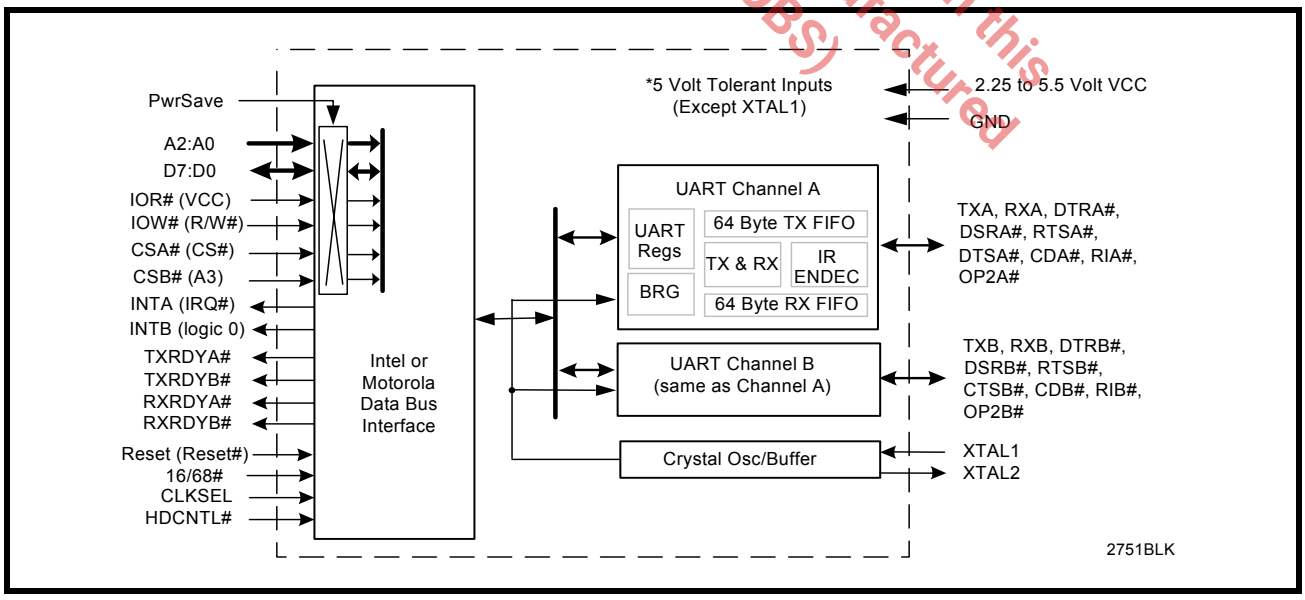

FIGURE 2. PIN OUT ASSIGNMENT

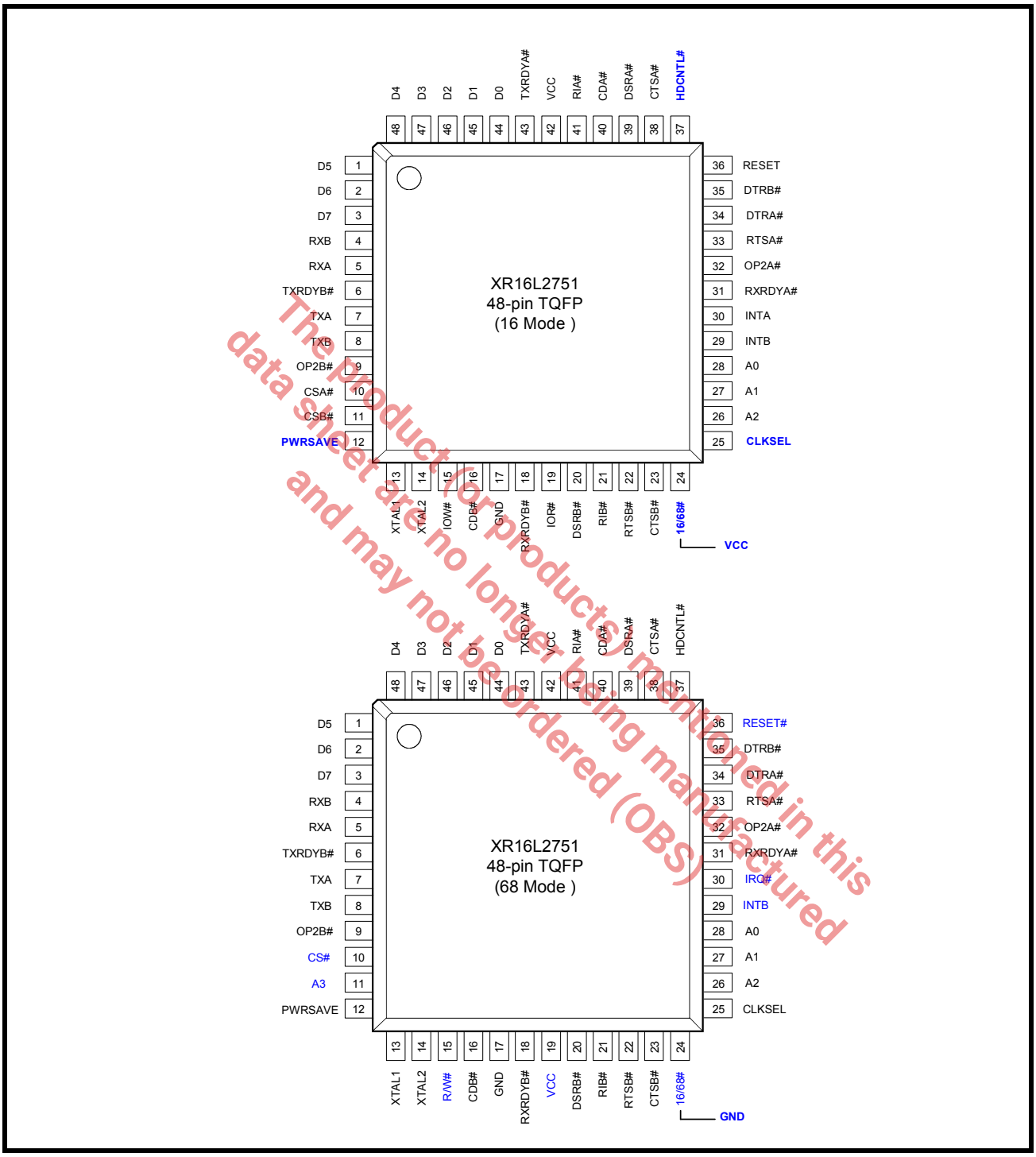

The product (or products) mentioned in this data sheet are no longer being manufactured and may not be ordered (OBS)

ORDERING INFORMATION

PART NUMBER	PACKAGE	OPERATING TEMPERATURE RANGE	DEVICE STATUS
XR16L2751CM	48-Lead TQFP	0°C to +70°C	Active
XR16L2751IM	48-Lead TQFP	-40°C to +85°C	Active

PIN DESCRIPTIONS

Pin Description

NAME	48-TQFP PIN #	TYPE	DESCRIPTION
DATA BUS INTERFACE			
A2 A1 A0	26 27 28	I	Address data lines [2:0]. These 3 address lines select one of the internal registers in UART channel A/B during a data bus transaction.
D7 D6 D5 D4 D3 D2 D1 D0	3 2 1 48 47 46 45 44	I/O	Data bus lines [7:0] (bidirectional).
IOR# (VCC)	19	I	When 16/68# pin is HIGH, the Intel bus interface is selected and this input becomes read strobe (active low). The falling edge instigates an internal read cycle and retrieves the data byte from an internal register pointed by the address lines [A2:A0], puts the data byte on the data bus to allow the host processor to read it on the rising edge. When 16/68# pin is LOW, the Motorola bus interface is selected and this input is not used and should be connected to VCC.
IOW# (R/W#)	15	I	When 16/68# pin is HIGH, it selects Intel bus interface and this input becomes write strobe (active low). The falling edge instigates the internal write cycle and the rising edge transfers the data byte on the data bus to an internal register pointed by the address lines. When 16/68# pin is LOW, the Motorola bus interface is selected and this input becomes read (HIGH) and write (LOW) signal.
CSA# (CS#)	10	I	When 16/68# pin is HIGH, this input is chip select A (active low) to enable channel A in the device. When 16/68# pin is LOW, this input becomes the chip select (active low) for the Motorola bus interface.
CSB# (A3)	11	I	When 16/68# pin is HIGH, this input is chip select B (active low) to enable channel B in the device. When 16/68# pin is LOW, this input becomes address line A3 which is used for channel selection in the Motorola bus interface. Input logic 0 selects channel A and logic 1 selects channel B.
INTA (IRQ#)	30	O	When 16/68# pin is HIGH for Intel bus interface, this output becomes channel A interrupt output. The output state is defined by the user through the software setting of MCR[3]. INTA is set to the active mode and OP2A# output to a logic 0 when MCR[3] is set to a logic 1. INTA is set to the three state mode and OP2A# to a logic 1 when MCR[3] is set to a logic 0. See MCR[3]. When 16/68# pin is LOW for Motorola bus interface, this output becomes device interrupt output (active low, open drain). An external pull-up resistor is required for proper operation.

The product(s) mentioned in this data sheet are no longer being manufactured and may not be ordered (OBS)

Pin Description

NAME	48-TQFP PIN #	TYPE	DESCRIPTION
INTB	29	O	When 16/68# pin is HIGH for Intel bus interface, this output becomes channel B interrupt output. The output state is defined by the user and through the software setting of MCR[3]. INTB is set to the active mode and OP2B# output to a logic 0 when MCR[3] is set to a logic 1. INTB is set to the three state mode and OP2B# to a logic 1 when MCR[3] is set to a logic 0. See MCR[3]. When 16/68# pin is LOW for Motorola bus interface, this output is not used and will stay at logic zero level. Leave this output unconnected.
TXRDYA#	43	O	UART channel A Transmitter Ready (active low). The output provides the TX FIFO/THR status for transmit channel A.
RXRDYA#	31	O	UART channel A Receiver Ready (active low). This output provides the RX FIFO/RHR status for receive channel A.
TXRDYB#	6	O	UART channel B Transmitter Ready (active low). The output provides the TX FIFO/THR status for transmit channel B.
RXRDYB#	18	O	UART channel B Receiver Ready (active low). This output provides the RX FIFO/RHR status for receive channel B.
MODEM OR SERIAL I/O INTERFACE			
TXA	7	O	UART channel A Transmit Data or infrared encoder data. Standard transmit and receive interface is enabled when MCR[6] = 0. In this mode, the TX signal will be HIGH during reset or idle (no data). Infrared IrDA transmit and receive interface is enabled when MCR[6] = 1. In the Infrared mode, the inactive state (no data) for the Infrared encoder/decoder interface is LOW. If it is not used, leave it unconnected.
RXA	5	I	UART channel A Receive Data or infrared receive data. Normal receive data input must idle HIGH. The infrared receiver pulses typically idles at logic 0 but can be inverted by software control prior going to the decoder, see MCR[6] and FCTR[2].
RTSA#	33	O	UART channel A Request-to-Send (active low) or general purpose output. This output must be asserted prior to using auto RTS flow control, see EFR[6], MCR[1], FCTR[1:0], EMSR[5:4] and IER[6]. For auto RS485 half-duplex direction control, see FCTR[3] and EMSR[3].
CTSA#	38	I	UART channel A Clear-to-Send (active low) or general purpose input. It can be used for auto CTS flow control, see EFR[7], MSR[4] and IER[7]. This input should be connected to VCC when not used.
DTRA#	34	O	UART channel A Data-Terminal-Ready (active low) or general purpose output.
DSRA#	39	I	UART channel A Data-Set-Ready (active low) or general purpose input. This input should be connected to VCC when not used. This input has no effect on the UART.
CDA#	40	I	UART channel A Carrier-Detect (active low) or general purpose input. This input should be connected to VCC when not used. This input has no effect on the UART.
RIA#	41	I	UART channel A Ring-Indicator (active low) or general purpose input. This input should be connected to VCC when not used. This input has no effect on the UART.
OP2A#	32	O	Output Port 2 Channel A - The output state is defined by the user and through the software setting of MCR[3]. When MCR[3] is set to a logic 1, INTA is set to the level mode and OP2A# output LOW. When MCR[3] is set to a logic 0, INTA is set to the three state mode and OP2A# is HIGH. See MCR[3]. This output must not be used as a general output when the interrupt output is used else it will disturb the INTA output functionality.

The product (or products) mentioned in this data sheet are no longer being manufactured and may not be ordered (OBS)

Pin Description

NAME	48-TQFP PIN #	TYPE	DESCRIPTION
TXB	8	O	UART channel B Transmit Data or infrared encoder data. Standard transmit and receive interface is enabled when MCR[6] = 0. In this mode, the TX signal will be HIGH during reset or idle (no data). Infrared IrDA transmit and receive interface is enabled when MCR[6] = 1. In the Infrared mode, the inactive state (no data) for the Infrared encoder/decoder interface is LOW. If it is not used, leave it unconnected.
RXB	4	I	UART channel B Receive Data or infrared receive data. Normal receive data input must idle HIGH. The infrared receiver pulses typically idles LOW but can be inverted by software control prior going in to the decoder, see MCR[6] and FCTR[2].
RTSB#	22	O	UART channel B Request-to-Send (active low) or general purpose output. This port must be asserted prior to using auto RTS flow control, see EFR[6], MCR[1], FCTR[1:0], EMSR[5:4] and IER[6]. For auto RS485 half-duplex direction control, see FCTR[3] and EMSR[3].
CTSB#	23	I	UART channel B Clear-to-Send (active low) or general purpose input. It can be used for auto CTS flow control, see EFR[7], and IER[7]. This input should be connected to VCC when not used.
DTRB#	35	O	UART channel B Data-Terminal-Ready (active low) or general purpose output.
DSRB#	20	I	UART channel B Data-Set-Ready (active low) or general purpose input. This input should be connected to VCC when not used. This input has no effect on the UART
CDB#	16	I	UART channel B Carrier-Detect (active low) or general purpose input. This input should be connected to VCC when not used. This input has no effect on the UART
RIB#	21	I	UART channel B Ring-Indicator (active low) or general purpose input. This input should be connected to VCC when not used. This input has no effect on the UART.
OP2B#	9	O	Output Port 2 Channel B - The output state is defined by the user and through the software setting of MCR[3]. When MCR[3] is set to a logic 1, INTB is set to the level mode and OP2B# output LOW. When MCR[3] is set to a logic 0, INTB is set to the three state mode and OP2B# is HIGH. See MCR[3]. This output must not be used as a general output when the interrupt output is used else it will disturb the INTB output functionality.
ANCILLARY SIGNALS			
XTAL1	13	I	Crystal or external clock input. This input is not 5V tolerant.
XTAL2	14	O	Crystal or buffered clock output. This output may be use to drive a clock buffer which can drive other device(s).
PwrSave	12	I	PowerSave (active high). This feature isolates the 2751's data bus interface from the host preventing other bus activities that cause higher power drain during sleep mode. See Sleep Mode with Auto Wake-up and PowerSave Feature section for details.
16/68#	24	I	Intel or Motorola Bus Select. When 16/68# pin is HIGH, 16 or Intel Mode, the device will operate in the Intel bus type of interface. When 16/68# pin is LOW, 68 or Motorola mode, the device will operate in the Motorola bus type of interface.
CLKSEL	25	I	Baud-Rate-Generator Input Clock Prescaler Select for channel A and B. This input is only sampled during power up or a reset. Connect to VCC for divide by 1 and GND for divide by 4. MCR[7] can override the state of this pin following a reset or initialization. See MCR bit-7 and **Figure 6** in the Baud Rate Generator section.

The product (or products) mentioned in this data sheet are no longer being manufactured and may not be ordered (OBS)

Pin Description

NAME	48-TQFP PIN #	TYPE	DESCRIPTION
HDCNTL#	37	I	Auto RS-485 half-duplex direction output enable for channel A and B (active low). Connect this pin to VCC for normal RTS# A/B function and to GND for auto RS-485 half-duplex direction output via the RTS# A/B pins. RTS# output goes low for transmit and high for receive (polarity inversion is available via EMSR[3]). FCTR[3] in channel A and B have control only if this input is disabled or at VCC.
RESET (RESET#)	36	I	When 16/68# pin is HIGH for Intel bus interface, this input becomes RESET (active high). When 16/68# pin is LOW for Motorola bus interface, this input becomes RESET# (active low). A 40 ns minimum active pulse on this pin will reset the internal registers and all outputs of channel A and B. The UART transmitter output will be held HIGH, the receiver input will be ignored and outputs are reset during reset period (see UART Reset Conditions).
VCC	42	Pwr	2.25V to 5.5V power supply. All input pins, except XTAL1, are 5V tolerant.
GND	17	Pwr	Power supply common, ground.

Pin type: I=Input, O=Output, I/O= Input/output, OD=Output Open Drain.

1.0 PRODUCT DESCRIPTION

The XR16L2751 (2751) integrates the functions of 2 enhanced 16C550 Universal Asynchronous Receiver and Transmitter (UART). Its features set is compatible to the XR16L2750 and XR16C2850 devices but offers Intel or Motorola data bus interface and PowerSave to isolate the data bus interface during Sleep mode. Hence, the 2751 adds 4 more inputs: 16/68#, PwrSave, HDCNTL# and CLKSEL pins. Each UART is independently controlled having its own set of device configuration registers. The configuration registers set is 16550 UART compatible for control, status and data transfer. Additionally, each UART channel has 64-bytes of transmit and receive FIFOs, automatic RTS/CTS hardware flow control with hysteresis control, automatic Xon/Xoff and special character software flow control, programmable transmit and receive FIFO trigger levels, FIFO level counters, infrared encoder and decoder (IrDA ver 1.0), programmable baud rate generator with a prescaler of divide by 1 or 4. The XR16L2751 can operate from 2.25V to 5.5V with 5 volt tolerant inputs. The 2751 is fabricated with an advanced CMOS process.

Enhanced Features

The 2751 DUART provides a solution that supports 64 bytes of transmit and receive FIFO memory, instead of 16 bytes in the ST16C2550, or one byte in the ST16C2450. The 2751 is designed to work with low supply voltage and high performance data communication systems, that require fast data processing time. Increased performance is realized in the 2751 by the larger transmit and receive FIFOs, FIFO trigger level control, FIFO level counters and automatic flow control mechanism. This allows the external processor to handle more networking tasks within a given time. For example, the ST16C2550 with a 16 byte FIFO, unloads 16 bytes of receive data in 1.53 ms (This example uses a character length of 11 bits, including start/stop bits at 115.2 Kbps). This means the external CPU will have to service the receive FIFO at 1.53 ms intervals. However with the 64 byte FIFO in the 2751, the data buffer will not require unloading/loading for 6.1 ms. This increases the service interval giving the external CPU additional time for other applications and reducing the overall UART interrupt servicing time. In addition, the programmable FIFO level trigger interrupt and automatic hardware/software flow control is uniquely provided for maximum data throughput performance especially when operating in a multi-channel system. The combination of the above greatly reduces the CPU's bandwidth requirement, increases performance, and reduces power consumption.

The 2751 supports a half-duplex output direction control signaling pin, RTS# A/B, to enable and disable the external RS-485 transceiver operation. It automatically switches the logic state of the output pin to the receive state after the last stop-bit of the last character has been shifted out of the transmitter. After receiving, the logic state of the output pin switches back to the transmit state when a data byte is loaded in the transmitter. The

The Product (or products) mentioned in this data sheet are no longer being manufactured and may not be ordered (OBS).

auto RS-485 direction control pin is not activated after reset. To activate the direction control function, user has to set FCTR[3] = 1. This pin is normally high for receive state, low for transmit state.

Data Bus Interface, Intel or Motorola Type

The 2751 provides a single host interface for the 2 UARTs and supports Intel or Motorola microprocessor (CPU) data bus interface. The Intel bus compatible interface allows direct interconnect to Intel compatible type of CPUs using IOR#, IOW# and CSA# or CSB# inputs for data bus operation. The Motorola bus compatible interface instead uses the R/W#, CS# and A3 signals for data bus transactions. Few data bus interface signals change their functions depending on user's selection, see pin description for details. The Intel and Motorola bus interface selection is made through the pin, 16/68#, pin 24.

Data Rate

Each channel in the 2751 is capable of operation up to 3.125 Mbps at 5V, 2 Mbps at 3.3V and 1 Mbps at 2.5V supply with 16X internal sampling clock rate, and 6.25 Mbps at 5V, 4 Mbps at 3.3V and 2 Mbps at 2.5V with 8X sampling clock rate. The device can operate with an external 24 MHz crystal on pins XTAL1 and XTAL2, or external clock source of up to 50 MHz on XTAL1 pin. With a typical crystal of 14.7456 MHz and through a software option, the user can set the prescaler bit for data rates of up to 1.84 Mbps.

Internal Enhanced Register Sets

Each UART has a set of enhanced registers providing control and monitoring functions for interrupt enable/disable and status, FIFO enable/disable, programmable TX and RX FIFO trigger level, TX and RX FIFO level counters, automatic hardware/software flow control enable/disable with selectable hysteresis, automatic RS-485 half-duplex direction control output enable/disable, programmable baud rates, infrared encoder/decoder enable/disable, modem interface controls and status, and sleep mode are all standard features. Following a power on reset or an external reset (and operating in 16 or Intel Mode), the registers defaults to the reset condition and its is compatible with previous generation of UARTs, 16C450, 16C550, 16C650A and 16C850.

The product (or products) mentioned in this data sheet are no longer being manufactured and may not be ordered (OBS)

2.0 FUNCTIONAL DESCRIPTIONS

2.1 CPU Interface

The CPU interface is 8 data bits wide with 3 address lines and control signals to execute data bus read and write transactions. The 2751 data interface supports the Intel compatible types of CPUs and it is compatible to the industry standard 16C550 UART. No clock (oscillator nor external clock) is required to operate a data bus transaction. Each bus cycle is asynchronous using CSA/B#, IOR# and IOW# or CS#, R/W# and A3 inputs. Both UART channels share the same data bus for host operations. A typical data bus interconnection for Intel and Motorola mode is shown in Figure 3.

FIGURE 3. XR16L2751 TYPICAL INTEL/MOTOROLA DATA BUS INTERCONNECTIONS

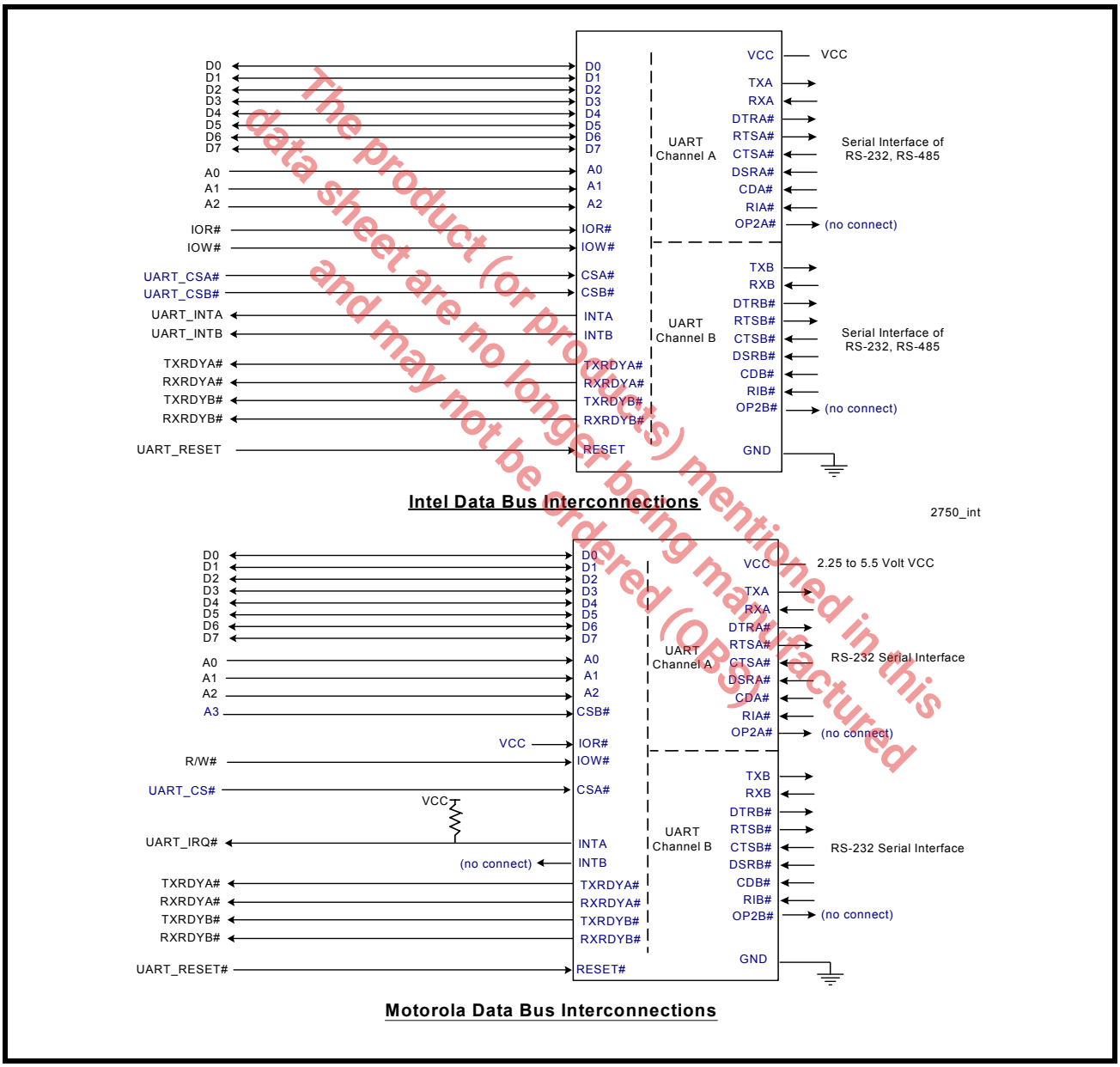

The product (or processes) mentioned in this data sheet are no longer being manufactured and may not be ordered (OBS)

2.2 5-Volt Tolerant Inputs

The 2751 can accept up to 5V inputs when operating at 3.3V or 2.5V. But note that if the 2751 is operating at 2.5V, its V_{OH} may not be high enough to meet the requirements of the V_{IH} of a CPU or a serial transceiver that is operating at 5V. Caution: XTAL1 is not 5 volt tolerant.

2.3 Device Hardware Reset

The RESET or RESET# input resets the internal registers and the serial interface outputs in both channels to their default state (see Table 17). An active pulse of longer than 40 ns duration will be required to activate the reset function in the device.

2.4 Device Identification and Revision

The XR16L2751 provides a Device Identification code and a Device Revision code to distinguish the part from other devices and revisions. To read the identification code from the part, it is required to set the baud rate generator registers DLL and DLM both to 0x00. Now reading the content of the DLM will provide 0x0A for the XR16L2751 and reading the content of DLL will provide the revision of the part; for example, a reading of 0x01 means revision A.

2.5 Channel A and B Selection

The UART provides the user with the capability to bi-directionally transfer information between an external CPU and an external serial communication device. During Intel Bus Mode (16/68# pin connected to VCC), a logic 0 on chip select pins, CSA# or CSB#, allows the user to select UART channel A or B to configure, send transmit data and/or unload receive data to/from the UART. Selecting both UARTs can be useful during power up initialization to write to the same internal registers, but do not attempt to read from both UARTs simultaneously. Individual channel select functions are shown in Table 1.

The product(s) mentioned in this datasheet are no longer being manufactured and may not be ordered (OBS)

TABLE 1: CHANNEL A AND B SELECT IN 16 MODE

CSA#	CSB#	FUNCTION
1	1	UART de-selected
0	1	Channel A selected
1	0	Channel B selected
0	0	Channel A and B selected

During Motorola Bus Mode (16/68# pin connected to GND), the package interface pins are configured for connection with Motorola, and other popular microprocessor bus types. In this mode the 2751 decodes an additional address, A3, to select one of the UART ports. The A3 address decode function is used only when in the Motorola Bus Mode. See Table 2.

TABLE 2: CHANNEL A AND B SELECT IN 68 MODE

CS#	A3	FUNCTION
1	N/A	UART de-selected
0	0	Channel A selected
0	1	Channel B selected

2.6 Channel A and B Internal Registers

Each UART channel in the 2751 has a set of enhanced registers for control, monitoring and data loading and unloading. The configuration register set is compatible to those already available in the standard single 16C550 and dual ST16C2550. These registers function as data holding registers (THR/RHR), interrupt status and control registers (ISR/IER), a FIFO control register (FCR), receive line status and control registers, (LSR/LCR), modem status and control registers (MSR/MCR), programmable data rate (clock) divisor registers (DLL/DLM), and an user accessible Scratchpad register (SPR).

Beyond the general 16C2550 features and capabilities, the 2751 offers enhanced feature registers (EFR, Xon/Xoff 1, Xon/Xoff 2, FCTR, TRG, EMSR, FC) that provide automatic RTS and CTS hardware flow control, Xon/Xoff software flow control, automatic RS-485 half-duplex direction output enable/disable, FIFO trigger level control and FIFO level counters. All the register functions are discussed in full detail later in "Section 3.0, UART INTERNAL REGISTERS" on page 22.

2.7 DMA Mode

The device does not support direct memory access. The DMA Mode (a legacy term) in this document doesn't mean "direct memory access" but refers to data block transfer operation. The DMA mode affects the state of the RXRDY# A/B and TXRDY# A/B output pins. The transmit and receive FIFO trigger levels provide additional flexibility to the user for block mode operation. The LSR bits 5-6 provide an indication when the transmitter is empty or has an empty location(s) for more data. The user can optionally operate the transmit and receive FIFO in the DMA mode (FCR bit-3 = 1). When the transmit and receive FIFO are enabled and the DMA mode is disabled (FCR bit-3 = 0), the 2751 is placed in single-character mode for data transmit or receive operation. When DMA mode is enabled (FCR bit-3 = 1), the user takes advantage of block mode operation by loading or unloading the FIFO in a block sequence determined by the programmed trigger level. In this mode, the 2751 sets the TXRDY# pin when the transmit FIFO becomes full, and sets the RXRDY# pin when the receive FIFO becomes empty. The following table shows their behavior. Also see Figures 20 through 25.

This product (or products) mentioned in this data sheet are no longer being manufactured and may not be ordered (OBS)

TABLE 3: TXRDY# AND RXRDY# OUTPUTS IN FIFO AND DMA MODE

PINS	FCR BIT-0=0 (FIFO DISABLED)	FCR BIT-0=1 (FIFO ENABLED)	
		FCR BIT-3 = 0 (DMA MODE DISABLED)	FCR BIT-3 = 1 (DMA MODE ENABLED)
RXRDY# A/B	LOW = 1 byte. HIGH = no data.	LOW = at least 1 byte in FIFO. HIGH = FIFO empty.	HIGH to LOW transition when FIFO reaches the trigger level, or time-out occurs. LOW to HIGH transition when FIFO empties.
TXRDY# A/B	LOW = THR empty. HIGH = byte in THR.	LOW = FIFO empty. HIGH = at least 1 byte in FIFO.	LOW = FIFO has at least 1 empty location. HIGH = FIFO is full.

2.8 INTA and INTB Outputs

The INTA and INTB interrupt output changes according to the operating mode and enhanced features setup. Table 4 and 5 summarize the operating behavior for the transmitter and receiver. Also see Figures 20 through 25.

TABLE 4: INTA AND INTB PINS OPERATION FOR TRANSMITTER

	AUTO RS485 MODE	FCR BIT-0 = 0 (FIFO DISABLED)	FCR BIT-0 = 1 (FIFO ENABLED)
INTA/B Pin	NO	LOW = a byte in THR HIGH = THR empty	LOW = FIFO above trigger level HIGH = FIFO below trigger level or FIFO empty
INTA/B Pin	YES	LOW = a byte in THR HIGH = transmitter empty	LOW = FIFO above trigger level HIGH = FIFO below trigger level or transmitter empty

TABLE 5: INTA AND INTB PIN OPERATION FOR RECEIVER

	FCR BIT-0 = 0 (FIFO DISABLED)	FCR BIT-0 = 1 (FIFO ENABLED)
INTA/B Pin	LOW = no data HIGH = 1 byte	LOW = FIFO below trigger level HIGH = FIFO above trigger level

2.9 Crystal Oscillator or External Clock Input

The 2751 includes an on-chip oscillator (XTAL1 and XTAL2) to produce a clock for both UART sections in the device. The CPU data bus does not require this clock for bus operation. The crystal oscillator provides a system clock to the Baud Rate Generators (BRG) section found in each of the UART. XTAL1 is the input to the oscillator or external clock buffer input with XTAL2 pin being the output. Please note that the input XTAL1 is not 5V tolerant and so the maximum voltage at the pin should be VCC. For programming details, see "Programmable Baud Rate Generator."

FIGURE 4. TYPICAL OSCILLATOR CONNECTIONS

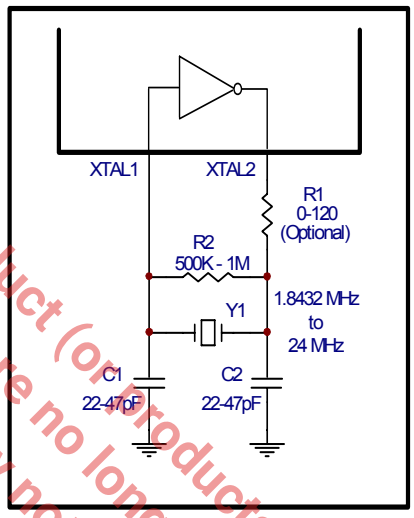

The product (or products) mentioned in this data sheet are no longer being manufactured and may not be ordered (OBS)

The on-chip oscillator is designed to use an industry standard microprocessor crystal (parallel resonant, fundamental frequency with 10-22 pF capacitance load, ESR of 20-120 ohms and 100ppm frequency tolerance) connected externally between the XTAL1 and XTAL2 pins (see Figure 5). The programmable Baud Rate Generator is capable of operating with a crystal oscillator frequency of up to 24 MHz. However, with an external clock input on XTAL1 pin and a 2K ohms pull-up resistor on XTAL2 pin (as shown in Figure 5) it can extend its operation up to 50 MHz (6.25 Mbps serial data rate) at 5V with an 8X sampling rate.

FIGURE 5. EXTERNAL CLOCK CONNECTION FOR EXTENDED DATA RATE

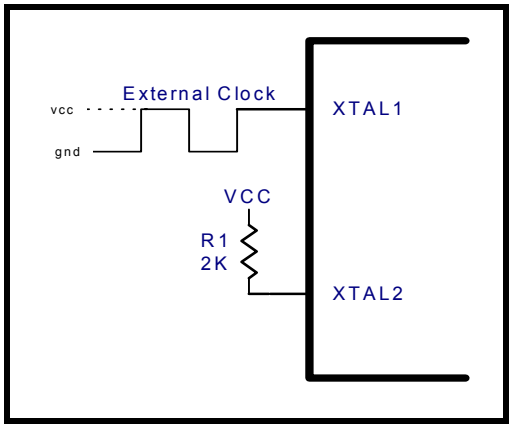

For further reading on the oscillator circuit please see the Application Note DAN108 on the EXAR web site at http://www.exar.com.

2.10 Programmable Baud Rate Generator

Each UART has its own Baud Rate Generator (BRG) with a prescaler. The prescaler is controlled by CLKSEL hardware pin or a software bit in the MCR register. The MCR register bit-7 sets the prescaler to divide the input crystal or external clock by 1 or 4 and can override the CLKSEL pin following reset. The clock output of the prescaler goes to the BRG. The BRG further divides this clock by a programmable divisor between 1 and (2^{16} - 1) to obtain a 16X sampling rate clock of the serial data rate. The sampling rate clock is used by the transmitter for data bit shifting and receiver for data sampling. The BRG divisor defaults to the maximum baud rate (DLL = 0x01 and DLM = 0x00) upon power up.

FIGURE 6. BAUD RATE GENERATOR AND PRESCALER

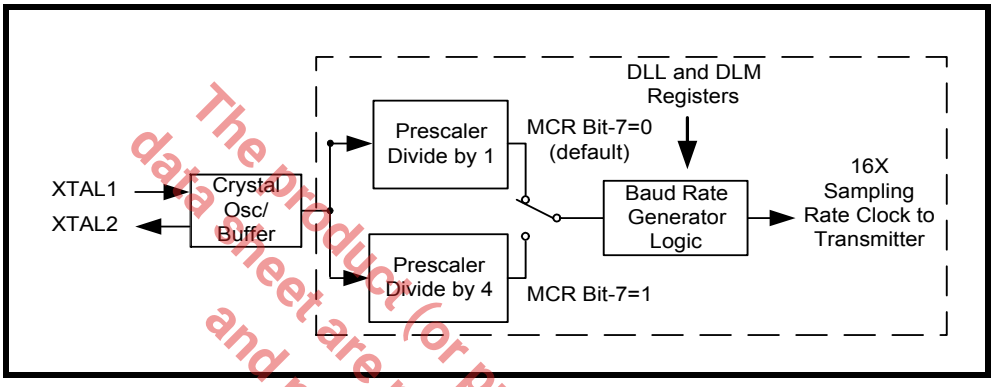

The product (or products) mentioned in this data sheet are no longer being manufactured and may not be ordered (OBS)

Programming the Baud Rate Generator Registers DLM and DLL provides the capability of selecting the operating data rate. Table 6 shows the standard data rates available with a 14.7456 MHz crystal or external clock at 16X sampling rate clock rate. A 16X sampling clock is typically used. However, user can select the 8X sampling clock rate mode (EMSR bit-7=0) to double the operating data rate. When using a non-standard data rate crystal or external clock, the divisor value can be calculated for DLL/DLM with the following equation.

divisor (decimal) = (XTAL1 clock frequency / prescaler) / (serial data rate x 16), with 16XMode [EMSR bit-7] = 1
divisor (decimal) = (XTAL1 clock frequency / prescaler) / (serial data rate x 8), with 16XMode [EMSR bit-7] = 0

TABLE 6: TYPICAL DATA RATES WITH A 14.7456 MHZ CRYSTAL OR EXTERNAL CLOCK

OUTPUT Data Rate MCR Bit-7=1	OUTPUT Data Rate MCR Bit-7=0 (DEFAULT)	DIVISOR FOR 16x Clock (Decimal)	DIVISOR FOR 16x Clock (HEX)	DLM PROGRAM VALUE (HEX)	DLL PROGRAM VALUE (HEX)	DATA RATE ERROR (%)
100	400	2304	900	09	00	0
600	2400	384	180	01	80	0
1200	4800	192	C0	00	C0	0
2400	9600	96	60	00	60	0
4800	19.2k	48	30	00	30	0
9600	38.4k	24	18	00	18	0
19.2k	76.8k	12	0C	00	0C	0
38.4k	153.6k	6	06	00	06	0
57.6k	230.4k	4	04	00	04	0
115.2k	460.8k	2	02	00	02	0
230.4k	921.6k	1	01	00	01	0

2.11 Transmitter

The transmitter section comprises of an 8-bit Transmit Shift Register (TSR) and 64 bytes of FIFO which includes a byte-wide Transmit Holding Register (THR). TSR shifts out every data bit with the 16X/8X internal clock. A bit time is 16 (8) clock periods (see EMSR bit-7). The transmitter sends the start-bit followed by the number of data bits, inserts the proper parity-bit if enabled, and adds the stop-bit(s). The status of the FIFO and TSR are reported in the Line Status Register (LSR bit-5 and bit-6).

2.11.1 Transmit Holding Register (THR) - Write Only

The transmit holding register is an 8-bit register providing a data interface to the host processor. The host writes transmit data byte to the THR to be converted into a serial data stream including start-bit, data bits, parity-bit and stop-bit(s). The least-significant-bit (Bit-0) becomes first data bit to go out. The THR is the input register to the transmit FIFO of 64 bytes when FIFO operation is enabled by FCR bit-0. Every time a write operation is made to the THR, the FIFO data pointer is automatically bumped to the next sequential data location.

2.11.2 Transmitter Operation in non-FIFO Mode

The host loads transmit data to THR one character at a time. The THR empty flag (LSR bit-5) is set when the data byte is transferred to TSR. THR flag can generate a transmit empty interrupt (ISR bit-1) when it is enabled by IER bit-1. The TSR flag (LSR bit-6) is set when TSR becomes completely empty.

The product (or product(s) mentioned in this data sheet are no longer being manufactured and may not be ordered (OBS).

FIGURE 7. TRANSMITTER OPERATION IN NON-FIFO MODE

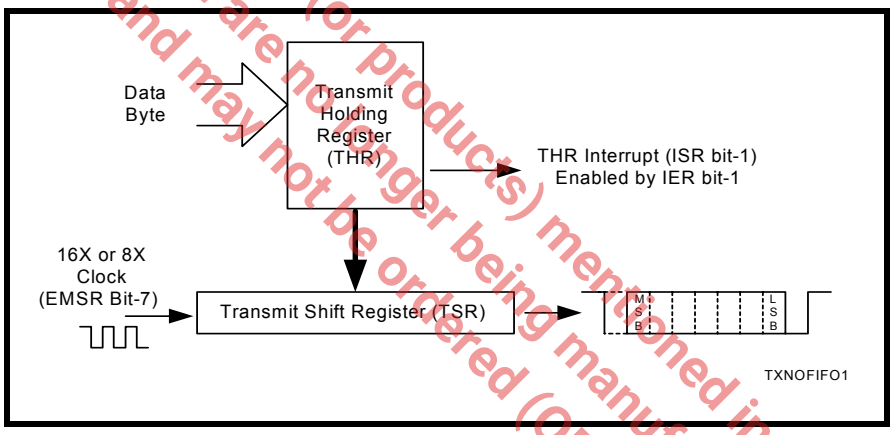

2.11.3 Transmitter Operation in FIFO Mode

The host may fill the transmit FIFO with up to 64 bytes of transmit data. The THR empty flag (LSR bit-5) is set whenever the FIFO is empty. The THR empty flag can generate a transmit empty interrupt (ISR bit-1) when the amount of data in the FIFO falls below its programmed trigger level. The transmit empty interrupt is enabled by IER bit-1. The TSR flag (LSR bit-6) is set when TSR/FIFO becomes empty.

FIGURE 8. TRANSMITTER OPERATION IN FIFO AND FLOW CONTROL MODE

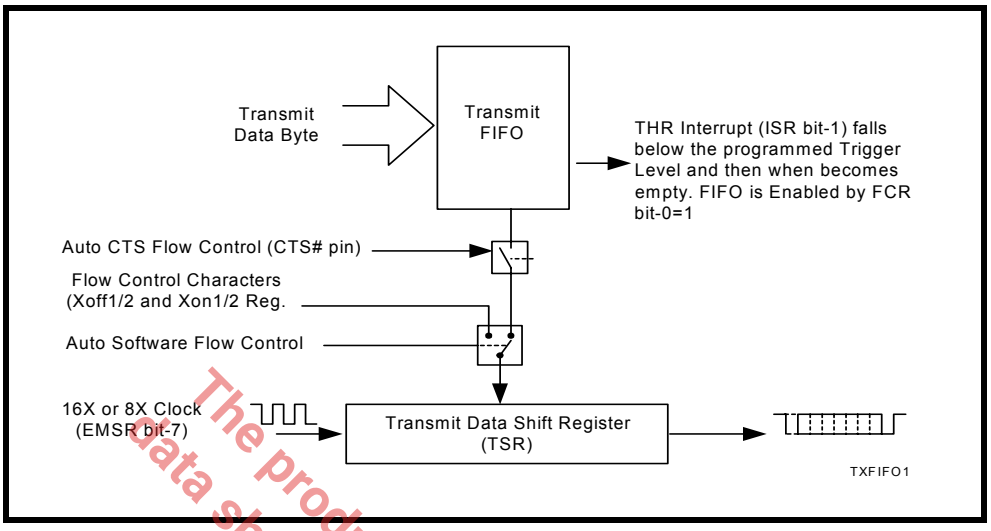

The product (s) mentioned in this data sheet are no longer being manufactured and may not be ordered (OBS)

2.12 RECEIVER

The receiver section contains an 8-bit Receive Shift Register (RSR) and 64 bytes of FIFO which includes a byte-wide Receive Holding Register (RHR). The RSR uses the 16X/8X clock (EMSR bit-7) for timing. It verifies and validates every bit on the incoming character in the middle of each data bit. On the falling edge of a start or false start bit, an internal receiver counter starts counting at the 16X/8X clock rate. After 8 clocks (or 4 if 8X) the start bit period should be at the center of the start bit. At this time the start bit is sampled and if it is still a logic 0 it is validated. Evaluating the start bit in this manner prevents the receiver from assembling a false character. The rest of the data bits and stop bits are sampled and validated in this same manner to prevent false framing. If there were any error(s), they are reported in the LSR register bits 2-4. Upon unloading the receive data byte from RHR, the receive FIFO pointer is bumped and the error tags are immediately updated to reflect the status of the data byte in RHR register. RHR can generate a receive data ready interrupt upon receiving a character or delay until it reaches the FIFO trigger level. Furthermore, data delivery to the host is guaranteed by a receive data ready time-out interrupt when data is not received for 4 word lengths as defined by LCR[1:0] plus 12 bits time. This is equivalent to 3.7-4.6 character times. The RHR interrupt is enabled by IER bit-0.

2.12.1 Receive Holding Register (RHR) - Read-Only

The Receive Holding Register is an 8-bit register that holds a receive data byte from the Receive Shift Register. It provides the receive data interface to the host processor. The RHR register is part of the receive FIFO of 64 bytes by 11-bits wide, the 3 extra bits are for the 3 error tags to be reported in LSR register. When the FIFO is enabled by FCR bit-0, the RHR contains the first data character received by the FIFO. After the RHR is read, the next character byte is loaded into the RHR and the errors associated with the current data byte are immediately updated in the LSR bits 2-4.

FIGURE 9. RECEIVER OPERATION IN NON-FIFO MODE

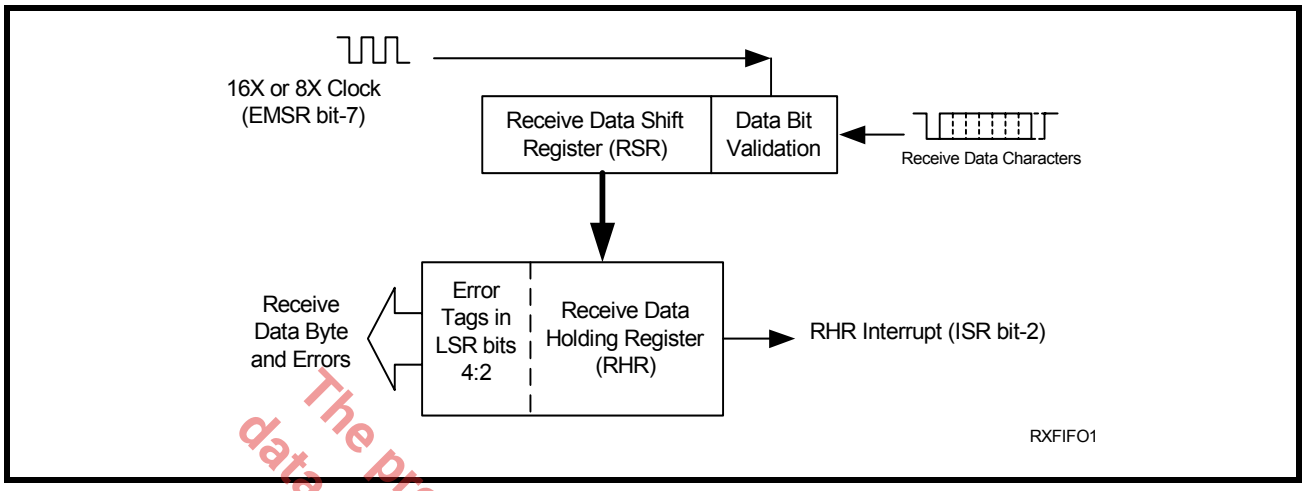

FIGURE 10. RECEIVER OPERATION IN FIFO AND AUTO RTS FLOW CONTROL MODE

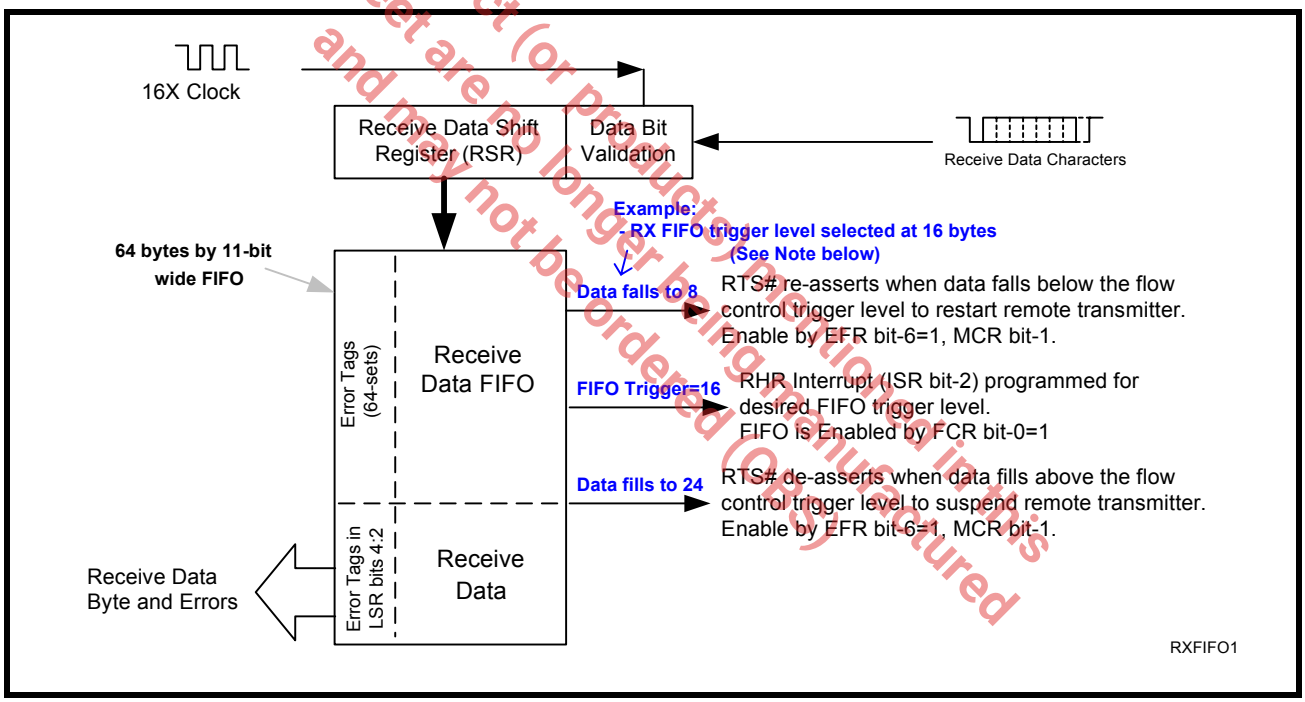

The product (or product(s) contained in this data sheet are no longer being manufactured and may not be ordered (Obs).

NOTE: *Table-B selected as Trigger Table for* **Figure 10** *(**Table 11**).*

2.13 Auto RTS (Hardware) Flow Control

Automatic RTS hardware flow control is used to prevent data overrun to the local receiver FIFO. The RTS# output is used to request remote unit to suspend/resume data transmission. The auto RTS flow control features is enabled to fit specific application requirement (see Figure 11):

- Enable auto RTS flow control using EFR bit-6.
- The auto RTS function must be started by asserting RTS# output pin (MCR bit-1 to logic 1 after it is enabled).

If using the Auto RTS interrupt:

- Enable RTS interrupt through IER bit-6 (after setting EFR bit-4). The UART issues an interrupt when the RTS# pin makes a transition from low to high: ISR bit-5 will be set to logic 1.

2.14 Auto RTS Hysteresis

The 2751 has a new feature that provides flow control trigger hysteresis while maintaining compatibility with the XR16C850, ST16C650A and ST16C550 family of UARTs. With the Auto RTS function enabled, an interrupt is generated when the receive FIFO reaches the programmed RX trigger level. The RTS# pin will not be forced HIGH (RTS off) until the receive FIFO reaches the upper limit of the hysteresis level. The RTS# pin will return LOW after the RX FIFO is unloaded to the lower limit of the hysteresis level. Under the above described conditions, the 2751 will continue to accept data until the receive FIFO gets full. The Auto RTS function is initiated when the RTS# output pin is asserted LOW (RTS On). Table 14 shows the complete details for the Auto RTS# Hysteresis levels. Please note that this table is for programmable trigger levels only (Table D). The hysteresis values for Tables A-C are the next higher and next lower trigger levels in the corresponding table.

2.15 Auto CTS Flow Control

Automatic CTS flow control is used to prevent data overrun to the remote receiver FIFO. The CTS# input is monitored to suspend/restart the local transmitter. The auto CTS flow control feature is selected to fit specific application requirement (see Figure 11):

- Enable auto CTS flow control using EFR bit-7.

If using the Auto CTS interrupt:

- Enable CTS interrupt through IER bit-7 (after setting EFR bit-4). The UART issues an interrupt when the CTS# pin is de-asserted (HIGH): ISR bit-5 will be set to 1, and UART will suspend transmission as soon as the stop bit of the character in process is shifted out. Transmission is resumed after the CTS# input is re-asserted (LOW), indicating more data may be sent.

This product (or products) mentioned in this data sheet are no longer being manufactured and may not be ordered (OBS)

FIGURE 11. AUTO RTS AND CTS FLOW CONTROL OPERATION

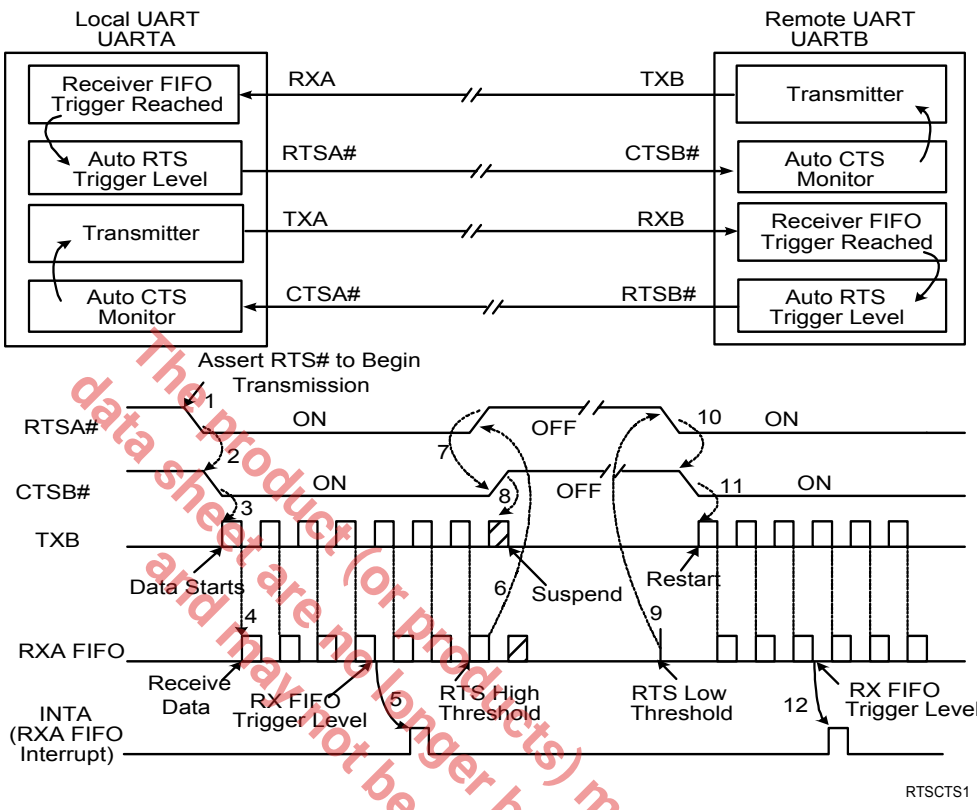

The local UART (UARTA) starts data transfer by asserting RTSA# (1). RTSA# is normally connected to CTSB# (2) of remote UART (UARTB). CTSB# allows its transmitter to send data (3). TXB data arrives and fills UARTA receive FIFO (4). When RXA data fills up to its receive FIFO trigger level, UARTA activates its RXA data ready interrupt (5) and continues to receive and put data into its FIFO. If interrupt service latency is long and data is not being unloaded, UARTA monitors its receive data fill level to match the upper threshold of RTS delay and de-assert RTSA# (6). CTSB# follows (7) and request UARTB transmitter to suspend data transfer. UARTB stops or finishes sending the data bits in its transmit shift register (8). When receive FIFO data in UARTA is unloaded to match the lower threshold of RTS delay (9), UARTA re-asserts RTSA# (10), CTSB# recognizes the change (11) and restarts its transmitter and data flow again until next receive FIFO trigger (12). This same event applies to the reverse direction when UARTA sends data to UARTB with RTSB# and CTSA# controlling the data flow.

The product (or products) mentioned in this data sheet are no longer being manufactured and may not be ordered (OBS)

2.16 Auto Xon/Xoff (Software) Flow Control

When software flow control is enabled (See Table 16), the 2751 compares one or two sequential receive data characters with the programmed Xon or Xoff-1,2 character value(s). If receive character(s) (RX) match the programmed values, the 2751 will halt transmission (TX) as soon as the current character has completed transmission. When a match occurs, the Xoff (if enabled via IER bit-5) flag will be set and the interrupt output pin will be activated. Following a suspension due to a match of the Xoff character, the 2751 will monitor the receive data stream for a match to the Xon-1,2 character. If a match is found, the 2751 will resume operation and clear the flags (ISR bit-4).

Reset initially sets the contents of the Xon/Xoff 8-bit flow control registers to a logic 0. Following reset the user can write any Xon/Xoff value desired for software flow control. Different conditions can be set to detect Xon/Xoff characters (See Table 16) and suspend/resume transmissions. When double 8-bit Xon/Xoff characters are selected, the 2751 compares two consecutive receive characters with two software flow control 8-bit values (Xon1, Xon2, Xoff1, Xoff2) and controls TX transmissions accordingly. Under the above described flow control mechanisms, flow control characters are not placed (stacked) in the user accessible RX data buffer or FIFO.

In the event that the receive buffer is overfilling and flow control needs to be executed, the 2751 automatically sends an Xoff message (when enabled) via the serial TX output to the remote modem. The 2751 sends the Xoff-1,2 characters two-character-times (= time taken to send two characters at the programmed baud rate) after the receive FIFO crosses the programmed trigger level (for all trigger tables A-D). To clear this condition, the 2751 will transmit the programmed Xon-1,2 characters as soon as receive FIFO is less than one trigger level below the programmed trigger level (for Trigger Tables A, B, and C) or when receive FIFO is less than the trigger level minus the hysteresis value (for Trigger Table D). This hysteresis value is the same as the Auto RTS Hysteresis value in Table 14. Table 7 below explains this when Trigger Table-B (See Table 11) is selected.

The product (or product mentioned in this data sheet) is no longer being manufactured and may not be ordered (OBS)

TABLE 7: AUTO XON/XOFF (SOFTWARE) FLOW CONTROL

RX TRIGGER LEVEL	INT PIN ACTIVATION	XOFF CHARACTER(S) SENT (CHARACTERS IN RX FIFO)	XON CHARACTER(S) SENT (CHARACTERS IN RX FIFO)
8	8	8*	0
16	16	16*	8
24	24	24*	16
28	28	28*	24

**** After the trigger level is reached, an xoff character is sent after a short span of time (= time required to send 2 characters); for example, after 2.083ms has elapsed for 9600 baud and 8-bit word length, no parity and 1 stop bit setting.***

2.17 Special Character Detect

A special character detect feature is provided to detect an 8-bit character when bit-5 is set in the Enhanced Feature Register (EFR). When this character (Xoff2) is detected, it will be placed in the FIFO along with normal incoming RX data.

The 2751 compares each incoming receive character with Xoff-2 data. If a match exists, the received data will be transferred to FIFO and ISR bit-4 will be set to indicate detection of special character. Although the Internal Register Table shows Xon, Xoff Registers with eight bits of character information, the actual number of bits is dependent on the programmed word length. Line Control Register (LCR) bits 0-1 defines the number of character bits, i.e., either 5 bits, 6 bits, 7 bits, or 8 bits. The word length selected by LCR bits 0-1 also determines the number of bits that will be used for the special character comparison. Bit-0 in the Xon, Xoff Registers corresponds with the LSB bit for the receive character.

2.18 Auto RS485 Half-duplex Control

The auto RS485 half-duplex direction control changes the behavior of the transmitter when enabled by FCTR bit-3. By default, it de-asserts RTS# (HIGH) output following the last stop bit of the last character that has been transmitted. This helps in turning around the transceiver to receive the remote station's response. When the host is ready to transmit next polling data packet again, it only has to load data bytes to the transmit FIFO. The transmitter automatically re-asserts RTS# (LOW) output prior to sending the data. The RS485 half-duplex direction control output can be inverted by enabling EMSR bit-3.

2.19 Infrared Mode

The 2751 UART includes the infrared encoder and decoder compatible to the IrDA (Infrared Data Association) version 1.0. The IrDA 1.0 standard that stipulates the infrared encoder sends out a 3/16 of a bit wide HIGH-pulse for each "0" bit in the transmit data stream. This signal encoding reduces the on-time of the infrared LED, hence reduces the power consumption. See **Figure 12** below.

The infrared encoder and decoder are enabled by setting MCR register bit-6 to a '1'. When the infrared feature is enabled, the transmit data output, TX, idles at logic zero level. Likewise, the RX input assumes an idle level of logic zero from a reset and power up, see **Figure 12**.

Typically, the wireless infrared decoder receives the input pulse from the infrared sensing diode on the RX pin. Each time it senses a light pulse, it returns a logic 1 to the data bit stream. However, this is not true with some infrared modules on the market which indicate a logic 0 by a light pulse. So the 2751 has a provision to invert the input polarity to accommodate this. In this case user can enable FCTR bit-2 to invert the input signal.

The product (or products) mentioned in this data sheet are no longer being manufactured and may not be ordered (OBS)

FIGURE 12. INFRARED TRANSMIT DATA ENCODING AND RECEIVE DATA DECODING

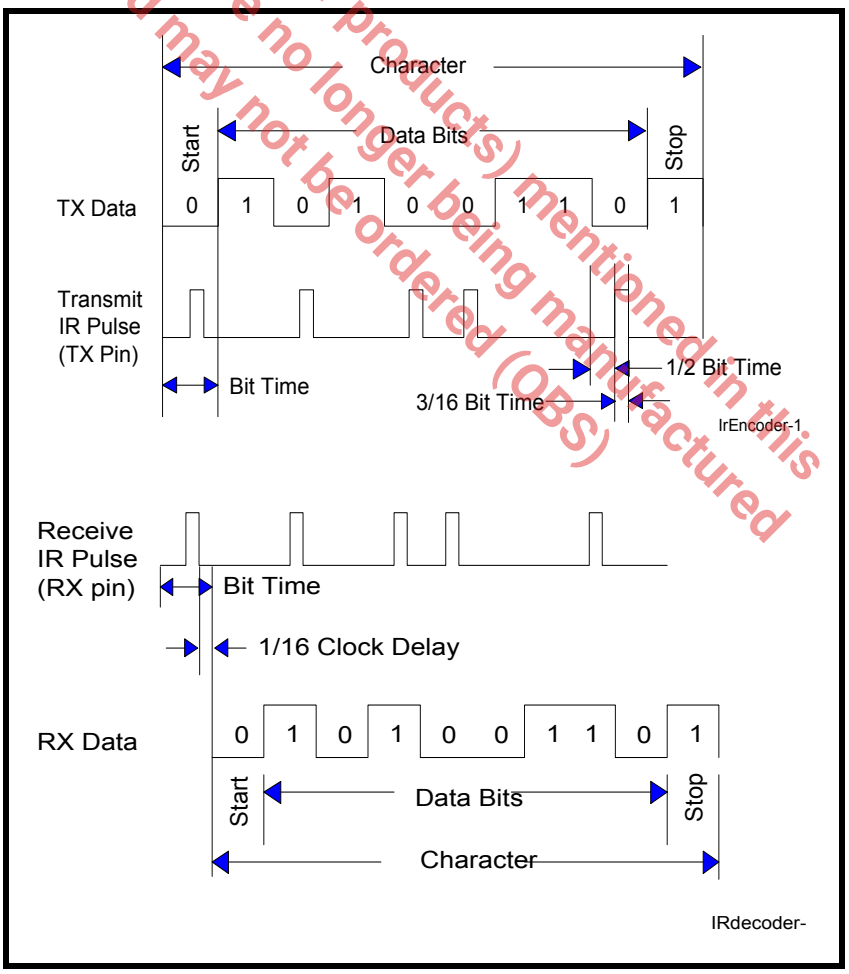

2.20 Sleep Mode with Wake-Up Indicator and PowerSave Feature

The 2751 supports low voltage system designs, hence, a sleep mode with auto wake-up and PowerSave feature is included to reduce power consumption when the device is not actively used.

2.20.1 Sleep Mode

All of these conditions must be satisfied for the 2751 to enter sleep mode:

- no interrupts pending for both channels of the 2751 (ISR bit-0 = 1)
- sleep mode of both channels are enabled (IER bit-4 = 1)
- modem inputs are not toggling (MSR bits 0-3 = 0)
- RX input pins are idling HIGH

The 2751 stops its crystal oscillator to conserve power in the sleep mode. User can check the XTAL2 pin for no clock output as an indication that the device has entered the sleep mode.

The 2751 resumes normal operation by any of the following when PowerSave mode is disabled (pin 12 at ground):

- a receive data start bit transition (HIGH to LOW)
- a data byte is loaded to the transmitter, THR or FIFO
- a change of logic state on any of the modem or general purpose serial inputs: CTS#, DSR#, CD#, RI#

If the sleep mode is enabled and the 2751 is awakened by one of the conditions described above, an interrupt is issued by the 2751 to signal to the CPU that it is awake. The lower nibble of the interrupt source register (ISR) will read a value of 0x1 for this interrupt and reading the ISR clears this interrupt. Since the same value (0x1) is also used to indicate no pending interrupt, users should exercise caution while using the sleep mode. The 2751 will return to the sleep mode automatically after all interrupting conditions have been serviced and cleared. If the 2751 is awakened by the modem inputs, a read to the MSR is required to reset the modem inputs. In any case, the sleep mode will not be entered while an interrupt is pending from channel A or B. The 2751 will stay in the sleep mode of operation until it is disabled by setting IER bit-4 to a logic 0.

A word of caution: owing to the starting up delay of the crystal oscillator after waking up from sleep mode, the first few receive characters may be lost. The number of characters lost during the restart also depends on your operating data rate. More characters are lost when operating at higher data rate. Also, it is important to keep RX A/B inputs idling HIGH or “marking” condition during sleep mode to avoid receiving a “break” condition upon the restart. This may occur when the external interface transceivers (RS-232, RS-485 or another type) are also put to sleep mode and cannot maintain the “marking” condition. To avoid this, the designer can use a 47k-100k ohm pull-up resistor on the RXA and RXB pins.

2.20.2 PowerSave Feature

If the address lines, data bus lines, IOW#, IOR#, CSA#, CSB#, and modem input lines remain steady when the 2751 is in sleep mode, the maximum current will be in the microamp range as specified in the DC Electrical Characteristics on page 40. If the input lines are floating or are toggling while the 2751 is in sleep mode, the current can be up to 100 times more. If not using the PowerSave feature, then an external buffer would be required to keep the address and data bus lines from toggling or floating to achieve the low current. But if the PowerSave feature is enabled (pin 12 connected to VCC), this will eliminate the need for an external buffer by internally isolating the address, data and control signals (see Figure 1 on page 1) from other bus activities that could cause wasteful power drain. The 2751 enters PowerSave mode when pin 12 is connected to VCC and the 2751 is in sleep mode (see Sleep Mode section above).

Since PowerSave mode isolates the address, data and control signals, the device will wake-up by:

- a receive data start bit transition (HIGH to LOW)
- a change of logic state on any of the modem or general purpose serial inputs: CTS#, DSR#, CD#, RI#

The 2751 will return to the PowerSave mode automatically after a read to the MSR (to reset the modem inputs) and all interrupting conditions have been serviced and cleared. The 2751 will stay in the PowerSave mode of operation until it is disabled by setting IER bit-4 to a logic 0 and/or the PowerSave pin is connected to GND.

The product(s) mentioned in this data sheet are no longer planned for manufacturing and may not be ordered (OBS)

2.21 Internal Loopback

The 2751 UART provides an internal loopback capability for system diagnostic purposes. The internal loopback mode is enabled by setting MCR register bit-4 to logic 1. All regular UART functions operate normally. Figure 13 shows how the modem port signals are re-configured. Transmit data from the transmit shift register output is internally routed to the receive shift register input allowing the system to receive the same data that it was sending. The TX, RTS# and DTR# pins are held HIGH or mark condition while the CTS#, DSR# CD# and RI# inputs are ignored. Caution: the RX input pins must be held to a logic 1 during loopback test else upon exiting the loopback test the UART may detect and report a false “break” signal. Also, Auto RTS/CTS hardware flow control is not supported during internal loopback.

FIGURE 13. INTERNAL LOOP BACK IN CHANNEL A AND B

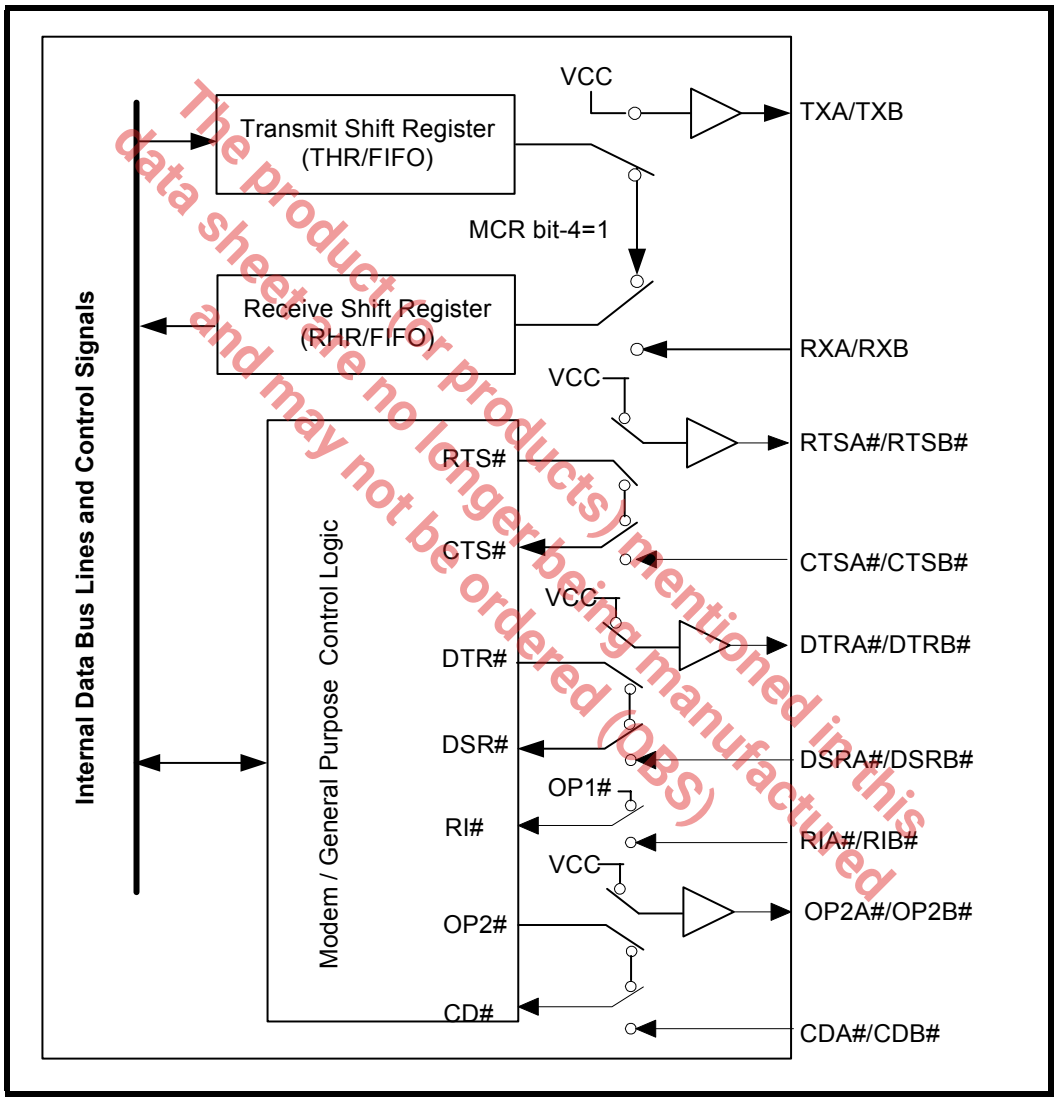

The product (or products) mentioned in this data sheet are no longer being manufactured and may not be ordered (OBS)

3.0 UART INTERNAL REGISTERS

Each of the UART channel in the 2751 has its own set of configuration registers selected by address lines A0, A1 and A2 with CSA# or CSB# selecting the channel. The complete register set is shown on Table 8 and Table 9.

TABLE 8: UART CHANNEL A AND B UART INTERNAL REGISTERS

ADDRESSES A2 A1 A0	REGISTER	READ/WRITE	COMMENTS
16C550 COMPATIBLE REGISTERS			
0 0 0	RHR - Receive Holding Register THR - Transmit Holding Register	Read-only Write-only	LCR[7] = 0
0 0 0	DLL - Div Latch Low Byte	Read/Write	LCR[7] = 1, LCR ≠ 0xBF
0 0 1	DLM - Div Latch High Byte	Read/Write	
0 0 0	DREV - Device Revision Code	Read-only	DLL, DLM = 0x00, LCR[7] = 1, LCR ≠ 0xBF
0 0 1	DVID - Device Identification Code	Read-only	
0 0 1	IER - Interrupt Enable Register	Read/Write	LCR[7] = 0
0 1 0	ISR - Interrupt Status Register FCR - FIFO Control Register	Read-only Write-only	LCR ≠ 0xBF
0 1 1	LCR - Line Control Register	Read/Write	
1 0 0	MCR - Modem Control Register	Read/Write	LCR ≠ 0xBF
1 0 1	LSR - Line Status Register Reserved	Read-only Write-only	
1 1 0	MSR - Modem Status Register Reserved	Read-only Write-only	
1 1 1	SPR - Scratchpad Register	Read/Write	LCR ≠ 0xBF, FCTR[6] = 0
1 1 1	FLVL - RX/TX FIFO Level Counter Register	Read-only	LCR ≠ 0xBF, FCTR[6] = 1
1 1 1	EMSR - Enhanced Mode Select Register	Write-only	
ENHANCED REGISTERS			
0 0 0	TRG - RX/TX FIFO Trigger Level Register FC - RX/TX FIFO Level Counter Register	Write-only Read-only	LCR = 0xBF
0 0 1	FCTR - Feature Control Register	Read/Write	
0 1 0	EFR - Enhanced Function Register	Read/Write	
1 0 0	Xon-1 - Xon Character 1	Read/Write	
1 0 1	Xon-2 - Xon Character 2	Read/Write	
1 1 0	Xoff-1 - Xoff Character 1	Read/Write	
1 1 1	Xoff-2 - Xoff Character 2	Read/Write	

The Product (or products) mentioned in this data sheet are no longer being manufactured and may not be ordered (OBS)

TABLE 9: INTERNAL REGISTERS DESCRIPTION. SHADED BITS ARE ENABLED WHEN EFR BIT-4=1

ADDRESS A2-A0	REG NAME	READ/ WRITE	BIT-7	BIT-6	BIT-5	BIT-4	BIT-3	BIT-2	BIT-1	BIT-0	COMMENT
16C550 Compatible Registers											
0 0 0	RHR	RD	Bit-7	Bit-6	Bit-5	Bit-4	Bit-3	Bit-2	Bit-1	Bit-0	**LCR[7]=0**
0 0 0	THR	WR	Bit-7	Bit-6	Bit-5	Bit-4	Bit-3	Bit-2	Bit-1	Bit-0	
0 0 1	IER	RD/WR	0/ CTS Int. Enable	0/ RTS Int. Enable	0/ Xoff Int. Enable	0/ Sleep Mode Enable	Modem Stat. Int. Enable	RX Line Stat. Int. Enable	TX Empty Int Enable	RX Data Int. Enable	
0 1 0	ISR	RD	FIFOs Enabled	FIFOs Enabled	0/ INT Source Bit-5	0/ INT Source Bit-4	INT Source Bit-3	INT Source Bit-2	INT Source Bit-1	INT Source Bit-0	**LCR ≠ 0xBF**
0 1 0	FCR	WR	RXFIFO Trigger	RXFIFO Trigger	0/ TXFIFO Trigger	0/ TXFIFO Trigger	DMA Mode Enable	TX FIFO Reset	RX FIFO Reset	FIFOs Enable	
0 1 1	LCR	RD/WR	Divisor Enable	Set TX Break	Set Par-ity	Even Parity	Parity Enable	Stop Bits	Word Length Bit-1	Word Length Bit-0	
1 0 0	MCR	RD/WR	0/ BRG Pres-caler	0/ IR Mode ENable	0/ XonAny	Internal Lopback Enable	OP2#/INT Output Enable	Rsrvd (OP1#)	RTS# Output Control	DTR# Output Control	
1 0 1	LSR	RD	RX FIFO Global Error	THR & TSR Empty	THR Empty	RX Break	RX Fram-ing Error	RX Parity Error	RX Over-run Error	RX Data Ready	**LCR ≠ 0xBF**
1 1 0	MSR	RD	CD# Input	RI# Input	DSR# Input	CTS# Input	Delta CD#	Delta RI#	Delta DSR#	Delta CTS#	
1 1 1	SPR	RD/WR	Bit-7	Bit-6	Bit-5	Bit-4	Bit-3	Bit-2	Bit-1	Bit-0	LCR ≠ 0xBF FCTR[6]=0
1 1 1	EMSR	WR	16X Sam-pling Rate Mode	LSR Error Inter-rupt. Imd/Dly#	Auto RTS Hyst. bit-3	Auto RTS Hyst. bit-2	Auto RS485 Output Inversion	Rsrvd	Rx/Tx FIFO Count bit-1	Rx/Tx FIFO Count bit-0	**LCR ≠ 0xBF FCTR[6]=1**
1 1 1	FLVL	RD	Bit-7	Bit-6	Bit-5	Bit-4	Bit-3	Bit-2	Bit-1	Bit-0	

The product (or products) mentioned in this data sheet are no longer being manufactured and may not be ordered. (OBS)

TABLE 9: INTERNAL REGISTERS DESCRIPTION. SHADED BITS ARE ENABLED WHEN EFR BIT-4=1

ADDRESS A2-A0	REG NAME	READ/ WRITE	BIT-7	BIT-6	BIT-5	BIT-4	BIT-3	BIT-2	BIT-1	BIT-0	COMMENT
Baud Rate Generator Divisor											
0 0 0	DLL	RD/WR	Bit-7	Bit-6	Bit-5	Bit-4	Bit-3	Bit-2	Bit-1	Bit-0	LCR[7]=1 LCR ≠ 0xBF
0 0 1	DLM	RD/WR	Bit-7	Bit-6	Bit-5	Bit-4	Bit-3	Bit-2	Bit-1	Bit-0	
0 0 0	DREV	RD	Bit-7	Bit-6	Bit-5	Bit-4	Bit-3	Bit-2	Bit-1	Bit-0	LCR[7]=1 LCR≠0xBF DLL=0x00 DLM=0x00
0 0 1	DVID	RD	0	0	0	0	1	0	1	0	
Enhanced Registers											
0 0 0	TRG	WR	Bit-7	Bit-6	Bit-5	Bit-4	Bit-3	Bit-2	Bit-1	Bit-0	LCR=0xBF
0 0 0	FC	RD	Bit-7	Bit-6	Bit-5	Bit-4	Bit-3	Bit-2	Bit-1	Bit-0	
0 0 1	FCTR	RD/WR	RX/TX Mode	SCPAD Swap	Trig Table Bit-1	Trig Table Bit-0	Auto RS485 Direction Control	RX IR Input Inv.	Auto RTS Hyst Bit-1	Auto RTS Hyst Bit-0	
0 1 0	EFR	RD/WR	Auto CTS Enable	Auto RTS Enable	Special Char Select	Enable IER [7:4], ISR [5:4], FCR[5:4], MCR[7:5]	Soft-ware Flow Cntl Bit-3	Soft-ware Flow Cntl Bit-2	Soft-ware Flow Cntl Bit-1	Soft-ware Flow Cntl Bit-0	
1 0 0	XON1	RD/WR	Bit-7	Bit-6	Bit-5	Bit-4	Bit-3	Bit-2	Bit-1	Bit-0	
1 0 1	XON2	RD/WR	Bit-7	Bit-6	Bit-5	Bit-4	Bit-3	Bit-2	Bit-1	Bit-0	
1 1 0	XOFF1	RD/WR	Bit-7	Bit-6	Bit-5	Bit-4	Bit-3	Bit-2	Bit-1	Bit-0	
1 1 1	XOFF2	RD/WR	Bit-7	Bit-6	Bit-5	Bit-4	Bit-3	Bit-2	Bit-1	Bit-0	

The product (or products) mentioned in this data sheet are no longer being manufactured and may not be ordered (OBS)

4.0 INTERNAL REGISTER DESCRIPTIONS

4.1 Receive Holding Register (RHR) - Read- Only

SEE"RECEIVER" ON PAGE 14.

4.2 Transmit Holding Register (THR) - Write-Only

SEE"TRANSMITTER" ON PAGE 13.

4.3 Interrupt Enable Register (IER) - Read/Write

The Interrupt Enable Register (IER) masks the interrupts from receive data ready, transmit empty, line status and modem status registers. These interrupts are reported in the Interrupt Status Register (ISR).

4.3.1 IER versus Receive FIFO Interrupt Mode Operation

When the receive FIFO (FCR BIT-0 = 1) and receive interrupts (IER BIT-0 = 1) are enabled, the RHR interrupts (see ISR bits 2 and 3) status will reflect the following:

A. The receive data available interrupts are issued to the host when the FIFO has reached the programmed trigger level. It will be cleared when the FIFO drops below the programmed trigger level.

B. FIFO level will be reflected in the ISR register when the FIFO trigger level is reached. Both the ISR register status bit and the interrupt will be cleared when the FIFO drops below the trigger level.

C. The receive data ready bit (LSR BIT-0) is set as soon as a character is transferred from the shift register to the receive FIFO. It is reset when the FIFO is empty.

4.3.2 IER versus Receive/Transmit FIFO Polled Mode Operation

When FCR BIT-0 equals a logic 1 for FIFO enable; resetting IER bits 0-3 enables the XR16L2751 in the FIFO polled mode of operation. Since the receiver and transmitter have separate bits in the LSR either or both can be used in the polled mode by selecting respective transmit or receive control bit(s).

A. LSR BIT-0 indicates there is data in RHR or RX FIFO.

B. LSR BIT-1 indicates an overrun error has occurred and that data in the FIFO may not be valid.

C. LSR BIT 2-4 provides the type of receive data errors encountered for the data byte in RHR, if any.

D. LSR BIT-5 indicates THR is empty.

E. LSR BIT-6 indicates when both the transmit FIFO and TSR are empty.

F. LSR BIT-7 indicates a data error in at least one character in the RX FIFO.

IER[0]: RHR Interrupt Enable

The receive data ready interrupt will be issued when RHR has a data character in the non-FIFO mode or when the receive FIFO has reached the programmed trigger level in the FIFO mode.

- Logic 0 = Disable the receive data ready interrupt (default).
- Logic 1 = Enable the receiver data ready interrupt.

IER[1]: THR Interrupt Enable

This bit enables the Transmit Ready interrupt which is issued whenever the THR becomes empty in the non-FIFO mode or when data in the FIFO falls below the programmed trigger level in the FIFO mode. If the THR is empty when this bit is enabled, an interrupt will be generated.

- Logic 0 = Disable Transmit Ready interrupt (default).
- Logic 1 = Enable Transmit Ready interrupt.

IER[2]: Receive Line Status Interrupt Enable

If any of the LSR register bits 1, 2, 3 or 4 is a logic 1, it will generate an interrupt to inform the host controller about the error status of the current data byte in FIFO. LSR bit-1 generates an interrupt immediately when the character has been received. LSR bits 2-4 generate an interrupt when the character with errors is read out of the FIFO (default). Instead, LSR bits 2-4 can be programmed to generate an interrupt immediately, by setting EMSR bit-6 to a logic 1.

- Logic 0 = Disable the receiver line status interrupt (default).
- Logic 1 = Enable the receiver line status interrupt.

IER[3]: Modem Status Interrupt Enable

- Logic 0 = Disable the modem status register interrupt (default).
- Logic 1 = Enable the modem status register interrupt.

IER[4]: Sleep Mode Enable (requires EFR bit-4 = 1)

- Logic 0 = Disable Sleep Mode (default).
- Logic 1 = Enable Sleep Mode. See Sleep Mode section for further details.

IER[5]: Xoff Interrupt Enable (requires EFR bit-4=1)

- Logic 0 = Disable the software flow control, receive Xoff interrupt. (default)
- Logic 1 = Enable the software flow control, receive Xoff interrupt. See Software Flow Control section for details.

The product (or products) mentioned in this datasheet are no longer being manufactured and may not be ordered (OBS)

IER[6]: RTS# Output Interrupt Enable (requires EFR bit-4=1)

- Logic 0 = Disable the RTS# interrupt (default).
- Logic 1 = Enable the RTS# interrupt. The UART issues an interrupt when the RTS# pin makes a transition from low to high.

IER[7]: CTS# Input Interrupt Enable (requires EFR bit-4=1)

- Logic 0 = Disable the CTS# interrupt (default).
- Logic 1 = Enable the CTS# interrupt. The UART issues an interrupt when CTS# pin makes a transition from low to high.

4.4 Interrupt Status Register (ISR) - Read-Only

The UART provides multiple levels of prioritized interrupts to minimize external software interaction. The Interrupt Status Register (ISR) provides the user with six interrupt status bits. Performing a read cycle on the ISR will give the user the current highest pending interrupt level to be serviced, others are queued up to be serviced next. No other interrupts are acknowledged until the pending interrupt is serviced. The Interrupt Source Table, Table 10, shows the data values (bit 0-5) for the interrupt priority levels and the interrupt sources associated with each of these interrupt levels.

The product (or products) mentioned in this data sheet are no longer being manufactured and may not be ordered (OBS)

4.4.1 Interrupt Generation:

- LSR is by any of the LSR bits 1, 2, 3 and 4.
- RXRDY is by RX trigger level.
- RXRDY Time-out is by a 4-char plus 12 bits delay timer.
- TXRDY is by TX trigger level or TX FIFO empty (or transmitter empty in auto RS-485 control).
- MSR is by any of the MSR bits 0, 1, 2 and 3.
- Receive Xoff/Special character is by detection of a Xoff or Special character.
- CTS# is when its transmitter toggles the input pin (from LOW to HIGH) during auto CTS flow control.
- RTS# is when its receiver toggles the output pin (from LOW to HIGH) during auto RTS flow control.
- Wake-up Indicator is when the UART comes out of sleep mode.

4.4.2 Interrupt Clearing:

- LSR interrupt is cleared by a read to the LSR register.
- RXRDY interrupt is cleared by reading data until FIFO falls below the trigger level.
- RXRDY Time-out interrupt is cleared by reading RHR.
- TXRDY interrupt is cleared by a read to the ISR register or writing to THR.
- MSR interrupt is cleared by a read to the MSR register.
- Xoff interrupt is cleared by a read to ISR or when Xon character(s) is received.
- Special character interrupt is cleared by a read to ISR or after the next character is received.
- RTS# and CTS# flow control interrupts are cleared by a read to the MSR register.
- Wake-up Indicator is cleared by a read to the ISR register.

TABLE 10: INTERRUPT SOURCE AND PRIORITY LEVEL

PRIORITY LEVEL	ISR REGISTER STATUS BITS						SOURCE OF INTERRUPT
	BIT-5	BIT-4	BIT-3	BIT-2	BIT-1	BIT-0	
1	0	0	0	1	1	0	LSR (Receiver Line Status Register)
2	0	0	1	1	0	0	RXRDY (Receive Data Time-out)
3	0	0	0	1	0	0	RXRDY (Received Data Ready)
4	0	0	0	0	1	0	TXRDY (Transmit Ready)
5	0	0	0	0	0	0	MSR (Modem Status Register)
6	0	1	0	0	0	0	RXRDY (Received Xoff or Special character)
7	1	0	0	0	0	0	CTS#, RTS# change of state
-	0	0	0	0	0	1	None (default) or Wake-up Indicator

The product (or products) mentioned in this data sheet are no longer being manufactured and may not be ordered (OBS)

ISR[0]: Interrupt Status

- Logic 0 = An interrupt is pending and the ISR contents may be used as a pointer to the appropriate interrupt service routine.
- Logic 1 = No interrupt pending (default condition) or the device has come out of sleep mode.

ISR[3:1]: Interrupt Status

These bits indicate the source for a pending interrupt at interrupt priority levels (See Interrupt Source Table 10).

ISR[5:4]: Interrupt Status

These bits are enabled when EFR bit-4 is set to a logic 1. ISR bit-4 indicates that the receiver detected a data match of the Xoff character(s). Note that once set to a logic 1, the ISR bit-4 will stay a logic 1 until a Xon character is received. ISR bit-5 indicates that CTS# or RTS# has changed state.

ISR[7:6]: FIFO Enable Status

These bits are set to a logic 0 when the FIFOs are disabled. They are set to a logic 1 when the FIFOs are enabled.

4.5 FIFO Control Register (FCR) - Write-Only

This register is used to enable the FIFOs, clear the FIFOs, set the transmit/receive FIFO trigger levels, and select the DMA mode. The DMA, and FIFO modes are defined as follows:

FCR[0]: TX and RX FIFO Enable

- Logic 0 = Disable the transmit and receive FIFO (default).
- Logic 1 = Enable the transmit and receive FIFOs. This bit must be set to logic 1 when other FCR bits are written or they will not be programmed.

FCR[1]: RX FIFO Reset

This bit is only active when FCR bit-0 is a '1'.

- Logic 0 = No receive FIFO reset (default)
- Logic 1 = Reset the receive FIFO pointers and FIFO level counter logic (the receive shift register is not cleared or altered). This bit will return to a logic 0 after resetting the FIFO.

FCR[2]: TX FIFO Reset

This bit is only active when FCR bit-0 is a '1'.

Logic 0 = No transmit FIFO reset (default).

Logic 1 = Reset the transmit FIFO pointers and FIFO level counter logic (the transmit shift register is not cleared or altered). This bit will return to a logic 0 after resetting the FIFO.

FCR[3]: DMA Mode Select

Controls the behavior of the TXRDY# and RXRDY# pins. See DMA operation section for details.

- Logic 0 = Normal Operation (default).
- Logic 1 = DMA Mode.

FCR[5:4]: Transmit FIFO Trigger Select

(logic 0 = default, TX trigger level = one)

These 2 bits set the trigger level for the transmit FIFO. The UART will issue a transmit interrupt when the number of characters in the FIFO falls below the selected trigger level, or when it gets empty in case that the FIFO did not get filled over the trigger level on last re-load. **Table 11** below shows the selections. EFR bit-4 must be set to '1' before these bits can be accessed.Note that the receiver and the transmitter cannot use different trigger tables. Whichever selection is made last applies to both the RX and TX side.

FCR[7:6]: Receive FIFO Trigger Select

(logic 0 = default, RX trigger level =1)

The FCTR Bits 5-4 are associated with these 2 bits. These 2 bits are used to set the trigger level for the receive FIFO. The UART will issue a receive interrupt when the number of the characters in the FIFO crosses the trigger level. **Table 11** shows the complete selections. Note that the receiver and the transmitter cannot use different trigger tables. Whichever selection is made last applies to both the RX and TX side.

The product (s) mentioned in this data sheet are no longer being manufactured and may not be ordered (OBS)

TABLE 11: TRANSMIT AND RECEIVE FIFO TRIGGER TABLE AND LEVEL SELECTION

TRIGGER TABLE	FCTR BIT-5	FCTR BIT-4	FCR BIT-7	FCR BIT-6	FCR BIT-5	FCR BIT-4	RECEIVE TRIGGER LEVEL	TRANSMIT TRIGGER LEVEL	COMPATIBILITY
Table-A	0	0	0 0 1 1	0 1 0 1	0	0	1 (default) 4 8 14	1 (default)	16C550, 16C2550, 16C2552, 16C554, 16C580
Table-B	0	1	0 0 1 1	0 1 0 1	0 0 1 1	0 1 0 1	8 16 24 28	16 8 24 30	16C650A
Table-C	1	0	0 0 1 1	0 1 0 1	0 0 1 1	0 1 0 1	8 16 56 60	8 16 32 56	16C654
Table-D	1	1	X	X	X	X	Programmable via TRG register. FCTR[7] = 0.	Programmable via TRG register. FCTR[7] = 1.	16L2752, 16C2850, 16C2852, 16C850, 16C854, 16C864

The product (or products) mentioned in this data sheet are no longer being manufactured and may not be ordered (OBS)

4.6 Line Control Register (LCR) - Read/Write

The Line Control Register is used to specify the asynchronous data communication format. The word or character length, the number of stop bits, and the parity are selected by writing the appropriate bits in this register.

LCR[1:0]: TX and RX Word Length Select

These two bits specify the word length to be transmitted or received.

BIT-1	BIT-0	WORD LENGTH
0	0	5 (default)
0	1	6
1	0	7
1	1	8

LCR[2]: TX and RX Stop-bit Length Select

The length of stop bit is specified by this bit in conjunction with the programmed word length.

BIT-2	WORD LENGTH	STOP BIT LENGTH (BIT TIME(S))
0	5,6,7,8	1 (default)
1	5	1-1/2
1	6,7,8	2

LCR[3]: TX and RX Parity Select

Parity or no parity can be selected via this bit. The parity bit is a simple way used in communications for data integrity check. See Table 12 for parity selection summary below.

- Logic 0 = No parity.
- Logic 1 = A parity bit is generated during the transmission while the receiver checks for parity error of the data character received.

LCR[4]: TX and RX Parity Select

If the parity bit is enabled with LCR bit-3 set to a logic 1, LCR BIT-4 selects the even or odd parity format.

- Logic 0 = ODD Parity is generated by forcing an odd number of logic 1's in the transmitted character. The receiver must be programmed to check the same format (default).
- Logic 1 = EVEN Parity is generated by forcing an even number of logic 1's in the transmitted character. The receiver must be programmed to check the same format.

LCR[5]: TX and RX Parity Select

If the parity bit is enabled, LCR BIT-5 selects the forced parity format.

- LCR BIT-5 = logic 0, parity is not forced (default).
- LCR BIT-5 = logic 1 and LCR BIT-4 = logic 0, parity bit is forced to a logical 1 for the transmit and receive data.
- LCR BIT-5 = logic 1 and LCR BIT-4 = logic 1, parity bit is forced to a logical 0 for the transmit and receive data.

The product (or products) mentioned in this data sheet are no longer being manufactured and may not be ordered (OBS)

TABLE 12: PARITY SELECTION

LCR BIT-5	LCR BIT-4	LCR BIT-3	PARITY SELECTION
X	X	0	No parity
0	0	1	Odd parity
0	1	1	Even parity
1	0	1	Force parity to mark, "1"
1	1	1	Forced parity to space, "0"

LCR[6]: Transmit Break Enable

When enabled, the Break control bit causes a break condition to be transmitted (the TX output is forced to a “space", LOW state). This condition remains, until disabled by setting LCR bit-6 to a logic 0.

- Logic 0 = No TX break condition. (default)
- Logic 1 = Forces the transmitter output (TX) to a “space”, LOW, for alerting the remote receiver of a line break condition.

LCR[7]: Baud Rate Divisors Enable

Baud rate generator divisor (DLL/DLM) enable.

- Logic 0 = Data registers are selected. (default)
- Logic 1 = Divisor latch registers are selected.

4.7 Modem Control Register (MCR) or General Purpose Outputs Control - Read/Write

The MCR register is used for controlling the serial/modem interface signals or general purpose inputs/outputs.

MCR[0]: DTR# Output

The DTR# pin is a modem control output. If the modem interface is not used, this output may be used as a general purpose output.

- Logic 0 = Force DTR# output HIGH (default).
- Logic 1 = Force DTR# output LOW.

MCR[1]: RTS# Output

The RTS# pin is a modem control output and may be used for automatic hardware flow control by enabled by EFR bit-6 or auto RS-485 half-duplex direction control output enabled by FCTR bit-3. If the modem interface is not used, this output may be used as a general purpose output.

- Logic 0 = Force RTS# output HIGH (default).
- Logic 1 = Force RTS# output LOW.

MCR[2]: Reserved

OP1# is not available as an output pin on the 2751. But it is available for use during Internal Loopback Mode. In the Loopback Mode, this bit is used to write the state of the modem RI# interface signal.

MCR[3]: OP2# Output / INT Output Enable

This bit enables and disables the operation of INT/IRQ#, interrupt output. If INT/IRQ# output is not used, OP2# can be used as a general purpose output. Also, if 16/68# pin selects Motorola bus interface mode, this bit must be set to logic 0.

- Logic 0 = INT (A-B) outputs disabled (three state mode) and OP2# output set HIGH (default).
- Logic 1 = INT (A-B) outputs enabled (active mode) and OP2# output set LOW.

MCR[4]: Internal Loopback Enable

- Logic 0 = Disable loopback mode (default).
- Logic 1 = Enable local loopback mode, see loopback section and Figure 13.

MCR[5]: Xon-Any Enable

- Logic 0 = Disable Xon-Any function (for 16C550 compatibility, default).
- Logic 1 = Enable Xon-Any function. In this mode, any RX character received will resume transmit operation. The RX character will be loaded into the RX FIFO, unless the RX character is an Xon or Xoff character and the 2751 is programmed to use the Xon/Xoff flow control.

The product (or products) mentioned in this data sheet are no longer being manufactured and may not be ordered (OBS)

MCR[6]: Infrared Encoder/Decoder Enable

- Logic 0 = Enable the standard modem receive and transmit input/output interface. (Default)
- Logic 1 = Enable infrared IrDA receive and transmit inputs/outputs. The TX/RX output/input are routed to the infrared encoder/decoder. The data input and output levels conform to the IrDA infrared interface requirement. While in this mode, the infrared TX output will be a logic 0 during idle data conditions.

MCR[7]: BRG Clock Prescaler Select

The 2751 has a hardware pin (pin 25) to select this function upon power up or reset. After the power up or reset, this register bit will have control and can alter the logic state.

- Logic 0 = Divide by one. The input clock from the crystal or external clock is fed directly to the Programmable Baud Rate Generator without further modification, i.e., divide by one (default).
- Logic 1 = Divide by four. The prescaler divides the input clock from the crystal or external clock by four and feeds it to the Programmable Baud Rate Generator, hence, data rates become one forth.

4.8 Line Status Register (LSR) - Read Only

This register provides the status of data transfers between the UART and the host.

LSR[0]: Receive Data Ready Indicator

- Logic 0 = No data in receive holding register or FIFO (default).
- Logic 1 = Data has been received and is saved in the receive holding register or FIFO.

LSR[1]: Receiver Overrun Flag

- Logic 0 = No overrun error. (default)
- Logic 1 = Overrun error. A data overrun error condition occurred in the receive shift register. This happens when additional data arrives while the FIFO is full. In this case the previous data in the receive shift register is overwritten. Note that under this condition the data byte in the receive shift register is not transferred into the FIFO, therefore the data in the FIFO is not corrupted by the error.

LSR[2]: Receive Data Parity Error Flag

- Logic 0 = No parity error (default).
- Logic 1 = Parity error. The receive character in RHR does not have correct parity information and is suspect. This error is associated with the character available for reading in RHR.

LSR[3]: Receive Data Framing Error Flag

- Logic 0 = No framing error (default).
- Logic 1 = Framing error. The receive character did not have a valid stop bit(s). This error is associated with the character available for reading in RHR.

LSR[4]: Receive Break Flag

- Logic 0 = No break condition (default).
- Logic 1 = The receiver received a break signal (RX was LOW for at least one character frame time). In the FIFO mode, only one break character is loaded into the FIFO.

LSR[5]: Transmit Holding Register Empty Flag

This bit is the Transmit Holding Register Empty indicator. The THR bit is set to a logic 1 when the last data byte is transferred from the transmit holding register to the transmit shift register. The bit is reset to logic 0 concurrently with the data loading to the transmit holding register by the host. In the FIFO mode this bit is set when the transmit FIFO is empty, it is cleared when the transmit FIFO contains at least 1 byte.

The product (or products) mentioned in this data sheet are no longer being manufactured and may not be ordered (OBS)

LSR[6]: THR and TSR Empty Flag

This bit is set to a logic 1 whenever the transmitter goes idle. It is set to logic 0 whenever either the THR or TSR contains a data character. In the FIFO mode this bit is set to a logic 1 whenever the transmit FIFO and transmit shift register are both empty.

LSR[7]: Receive FIFO Data Error Flag

- Logic 0 = No FIFO error (default).
- Logic 1 = A global indicator for the sum of all error bits in the RX FIFO. At least one parity error, framing error or break indication is in the FIFO data. This bit clears when there is no more error(s) in any of the bytes in the RX FIFO.

4.9 Modem Status Register (MSR) - Read Only

This register provides the current state of the modem interface input signals. Lower four bits of this register are used to indicate the changed information. These bits are set to a logic 1 whenever a signal from the modem changes state. These bits may be used for general purpose inputs when they are not used with modem signals.

MSR[0]: Delta CTS# Input Flag

- Logic 0 = No change on CTS# input (default).
- Logic 1 = The CTS# input has changed state since the last time it was monitored. A modem status interrupt will be generated if MSR interrupt is enabled (IER bit-3).

MSR[1]: Delta DSR# Input Flag

- Logic 0 = No change on DSR# input (default).
- Logic 1 = The DSR# input has changed state since the last time it was monitored. A modem status interrupt will be generated if MSR interrupt is enabled (IER bit-3).

MSR[2]: Delta RI# Input Flag

- Logic 0 = No change on RI# input (default).
- Logic 1 = The RI# input has changed from LOW to HIGH, ending of the ringing signal. A modem status interrupt will be generated if MSR interrupt is enabled (IER bit-3).

MSR[3]: Delta CD# Input Flag

- Logic 0 = No change on CD# input (default).
- Logic 1 = Indicates that the CD# input has changed state since the last time it was monitored. A modem status interrupt will be generated if MSR interrupt is enabled (IER bit-3).

MSR[4]: CTS Input Status

CTS# pin may function as automatic hardware flow control signal input if it is enabled and selected by Auto CTS (EFR bit-7). Auto CTS flow control allows starting and stopping of local data transmissions based on the modem CTS# signal. A HIGH on the CTS# pin will stop UART transmitter as soon as the current character has finished transmission, and a LOW will resume data transmission. Normally MSR bit-4 bit is the complement of the CTS# input. However in the loopback mode, this bit is equivalent to the RTS# bit in the MCR register. The CTS# input may be used as a general purpose input when the modem interface is not used.

MSR[5]: DSR Input Status

Normally this bit is the complement of the DSR# input. In the loopback mode, this bit is equivalent to the DTR# bit in the MCR register. The DSR# input may be used as a general purpose input when the modem interface is not used.

MSR[6]: RI Input Status

Normally this bit is the complement of the RI# input. In the loopback mode this bit is equivalent to bit-2 in the MCR register. The RI# input may be used as a general purpose input when the modem interface is not used.

The product (or products) mentioned in this data sheet are no longer being manufactured and may not be ordered (OBS)

MSR[7]: CD Input Status

Normally this bit is the complement of the CD# input. In the loopback mode this bit is equivalent to bit-3 in the MCR register. The CD# input may be used as a general purpose input when the modem interface is not used.

4.10 Scratchpad Register (SPR) - Read/Write

This is a 8-bit general purpose register for the user to store temporary data. The content of this register is preserved during sleep mode but becomes 0xFF (default) after a reset or a power off-on cycle.

4.11 Enhanced Mode Select Register (EMSR)

This register replaces SPR (during a Write) and is accessible only when FCTR[6] = 1.

EMSR[1:0]: Receive/Transmit FIFO Count (Write-Only)

When Scratchpad Swap (FCTR[6]) is asserted, EMSR bits 1-0 controls what mode the FIFO Level Counter is operating in.

TABLE 13: SCRATCHPAD SWAP SELECTION

FCTR[6]	EMSR[1]	EMSR[0]	Scratchpad is
0	X	X	Scratchpad
1	0	0	RX FIFO Counter Mode
1	0	1	TX FIFO Counter Mode
1	1	0	RX FIFO Counter Mode
1	1	1	Alternate RX/TX FIFO Counter Mode

During Alternate RX/TX FIFO Counter Mode, the first value read after EMSR bits 1-0 have been asserted will always be the RX FIFO Counter. The second value read will correspond with the TX FIFO Counter. The next value will be the RX FIFO Counter again, then the TX FIFO Counter and so on and so forth.

EMSR[2]: Reserved

EMSR[3]: Automatic RS485 Half-Duplex Control Output Inversion

- Logic 0 = RTS# output is LOW during TX and HIGH during RX (default, compatible with 16C2850).
- Logic 1 = RTS# output is HIGH during TX and LOW during RX.

The product (or products) mentioned in this data sheet are no longer being manufactured and may not be ordered (OBS)

EMSR[5:4]: Extended RTS Hysteresis

TABLE 14: AUTO RTS HYSTERESIS

EMSR BIT-5	EMSR BIT-4	FCTR BIT-1	FCTR BIT-0	RTS# HYSTERESIS (CHARACTERS)
0	0	0	0	0
0	0	0	1	±4
0	0	1	0	±6
0	0	1	1	±8
0	1	0	0	±8
0	1	0	1	±16
0	1	1	0	±24
0	1	1	1	±32
1	0	0	0	±40
1	0	0	1	±44
1	0	1	0	±48
1	0	1	1	±52
1	1	0	0	±12
1	1	0	1	±20
1	1	1	0	±28
1	1	1	1	±36

The product (or products) mentioned in this data sheet are no longer being manufactured and may not be ordered (OBS)

EMSR[6]: LSR Interrupt Mode

- Logic 0 = LSR Interrupt Delayed (for 16C2550 compatibility, default). LSR bits 2, 3, and 4 will generate an interrupt when the character with the error is in the RHR.
- Logic 1 = LSR Interrupt Immediate. LSR bits 2, 3, and 4 will generate an interrupt as soon as the character is received into the FIFO.

EMSR[7]: 16X Sampling Rate Mode

Logic 0 = 8X Sampling Rate.

Logic 1 = 16X Sampling Rate (for 16C2550 compatibility, default).

4.12 FIFO Level Register (FLVL) - Read-Only

The FIFO Level Register replaces the Scratchpad Register (during a Read) when FCTR[6] = 1. Note that this is not identical to the FIFO Data Count Register which can be accessed when LCR = 0xBF.

FLVL[7:0]: FIFO Level Register

This register provides the FIFO counter level for the RX FIFO or the TX FIFO or both depending on EMSR[1:0]. See Table 13 for details.

4.13 Baud Rate Generator Registers (DLL and DLM) - Read/Write

The concatenation of the contents of DLM and DLL gives the 16-bit divisor value which is used to calculate the baud rate:

- Baud Rate = (Clock Frequency / 16) / Divisor

See MCR bit-7 and the baud rate table also.

4.14 Device Identification Register (DVID) - Read Only

This register contains the device ID (0x0A for XR16L2751). Prior to reading this register, DLL and DLM should be set to 0x00.

4.15 Device Revision Register (DREV) - Read Only

This register contains the device revision information. For example, 0x01 means revision A. Prior to reading this register, DLL and DLM should be set to 0x00.

4.16 Trigger Level (TRG) - Write-Only

User Programmable Transmit/Receive Trigger Level Register.

TRG[7:0]: Trigger Level Register

These bits are used to program desired trigger levels when trigger Table-D is selected. FCTR bit-7 selects between programming the RX Trigger Level (a logic 0) and the TX Trigger Level (a logic 1).

4.17 FIFO Data Count Register (FC) - Read-Only

This register is accessible when LCR = 0xBF. Note that this register is not identical to the FIFO Level Count Register which is located in the general register set when FCTR bit-6 = 1 (Scratchpad Register Swap). It is suggested to read the FIFO Level Count Register at the Scratchpad Register location when FCTR bit-6 = 1. See Table 13.

FC[7:0]: RX/TX FIFO Level Count

Receive/Transmit FIFO Level Count. Number of characters in Receiver FIFO (FCTR[7] = 0) or Transmitter FIFO (FCTR[7] = 1) can be read via this register.

4.18 Feature Control Register (FCTR) - Read/Write

This register controls the XR16L2751 new functions.

FCTR[1:0]: RTS Hysteresis

User selectable RTS# hysteresis levels for hardware flow control application. After reset, these bits are set to “0”. See Table 14 for more details.

FCTR[2]: IrDa RX Inversion

- Logic 0 = Select RX input as encoded IrDa data (Idle state will be LOW).
- Logic 1 = Select RX input as inverted encoded IrDa data (Idle state will be HIGH).

FCTR[3]: Auto RS-485 Direction Control

The 2751 has hardware pin 37 to enable this auto RS-485 direction control function from power up, however, pin 37 must be tied to VCC for this bit to gain control else auto RS-485 is always active.

- Logic 0 = Standard ST16C550 mode. Transmitter generates an interrupt when transmit holding register becomes empty and transmit shift register is shifting data out.
- Logic 1 = Enable Auto RS485 Direction Control function. The direction control signal, RTS# pin, changes its output logic state from LOW to HIGH one bit time after the last stop bit of the last character is shifted out. Also, the Transmit interrupt generation is delayed until the transmitter shift register becomes empty. The RTS# output pin will automatically return to a LOW when a data byte is loaded into the TX FIFO. However, RTS# behavior can be inverted by setting EMSR[3] = 1.

FCTR[5:4]: Transmit/Receive Trigger Table Select

See Table 11.

TABLE 15: TRIGGER TABLE SELECT

FCTR BIT-5	FCTR BIT-4	TABLE
0	0	Table-A (TX/RX)
0	1	Table-B (TX/RX)
1	0	Table-C (TX/RX)
1	1	Table-D (TX/RX)

The product (or products) mentioned in this data sheet are no longer being manufactured and may not be ordered (OBS).

FCTR[6]: Scratchpad Swap

- Logic 0 = Scratchpad register is selected as general read and write register. ST16C550 compatible mode.
- Logic 1 = FIFO Count register (Read-Only), Enhanced Mode Select Register (Write-Only). Number of characters in transmit or receive FIFO can be read via Scratchpad register when this bit is set. Enhanced Mode Select Register is selected when it is written into.

FCTR[7]: Programmable Trigger Register Select

- Logic 0 = Registers TRG and FC selected for RX.
- Logic 1 = Registers TRG and FC selected for TX.

4.19 Enhanced Feature Register (EFR)

Enhanced features are enabled or disabled using this register. Bit 0-3 provide single or dual consecutive character software flow control selection (see Table 16). When the Xon1 and Xon2 and Xoff1 and Xoff2 modes are selected, the double 8-bit words are concatenated into two sequential characters. Caution: note that whenever changing the TX or RX flow control bits, always reset all bits back to logic 0 (disable) before programming a new setting.

EFR[3:0]: Software Flow Control Select

Single character and dual sequential characters software flow control is supported. Combinations of software flow control can be selected by programming these bits.

The product (or products) mentioned in this data sheet are no longer being manufactured and may not be ordered (OBS)

TABLE 16: SOFTWARE FLOW CONTROL FUNCTIONS

EFR BIT-3 CONT-3	EFR BIT-2 CONT-2	EFR BIT-1 CONT-1	EFR BIT-0 CONT-0	TRANSMIT AND RECEIVE SOFTWARE FLOW CONTROL
0	0	0	0	No TX and RX flow control (default and reset)
0	0	X	X	No transmit flow control
1	0	X	X	Transmit Xon1, Xoff1
0	1	X	X	Transmit Xon2, Xoff2
1	1	X	X	Transmit Xon1 and Xon2, Xoff1 and Xoff2
X	X	0	0	No receive flow control
X	X	1	0	Receiver compares Xon1, Xoff1
X	X	0	1	Receiver compares Xon2, Xoff2
1	0	1	1	Transmit Xon1, Xoff1 Receiver compares Xon1 or Xon2, Xoff1 or Xoff2
0	1	1	1	Transmit Xon2, Xoff2 Receiver compares Xon1 or Xon2, Xoff1 or Xoff2
1	1	1	1	Transmit Xon1 and Xon2, Xoff1 and Xoff2, Receiver compares Xon1 and Xon2, Xoff1 and Xoff2
0	0	1	1	No transmit flow control, Receiver compares Xon1 and Xon2, Xoff1 and Xoff2

EFR[4]: Enhanced Function Bits Enable

Enhanced function control bit. This bit enables IER bits 4-7, ISR bits 4-5, FCR bits 4-5, and MCR bits 5-7 to be modified. After modifying any enhanced bits, EFR bit-4 can be set to a logic 0 to latch the new values. This feature prevents legacy software from altering or overwriting the enhanced functions once set. Normally, it is recommended to leave it enabled, logic 1.

- Logic 0 = modification disable/latch enhanced features. IER bits 4-7, ISR bits 4-5, FCR bits 4-5, and MCR bits 5-7 are saved to retain the user settings. After a reset, the IER bits 4-7, ISR bits 4-5, FCR bits 4-5, and MCR bits 5-7 are set to a logic 0 to be compatible with ST16C550 mode (default).
- Logic 1 = Enables the above-mentioned register bits to be modified by the user.

EFR[5]: Special Character Detect Enable

- Logic 0 = Special Character Detect Disabled (default).
- Logic 1 = Special Character Detect Enabled. The UART compares each incoming receive character with data in Xoff-2 register. If a match exists, the receive data will be transferred to FIFO and ISR bit-4 will be set to indicate detection of the special character. Bit-0 corresponds with the LSB bit of the receive character. If flow control is set for comparing Xon1, Xoff1 (EFR [1:0]= '10') then flow control and special character work normally. However, if flow control is set for comparing Xon2, Xoff2 (EFR[1:0]= '01') then flow control works normally, but Xoff2 will not go to the FIFO, and will generate an Xoff interrupt and a special character interrupt, if enabled via IER bit-5.

EFR[6]: Auto RTS Flow Control Enable

RTS# output may be used for hardware flow control by setting EFR bit-6 to logic 1. When Auto RTS is selected, an interrupt will be generated when the receive FIFO is filled to the programmed trigger level and RTS de-asserts HIGH at the next upper trigger level. RTS# will return LOW when FIFO data falls below the next lower trigger level. The RTS# output must be asserted (LOW) before the auto RTS can take effect. RTS# pin will function as a general purpose output when hardware flow control is disabled.

- Logic 0 = Automatic RTS flow control is disabled (default).
- Logic 1 = Enable Automatic RTS flow control.

EFR[7]: Auto CTS Flow Control Enable

Automatic CTS Flow Control.

- Logic 0 = Automatic CTS flow control is disabled (default).
- Logic 1 = Enable Automatic CTS flow control. Data transmission stops when CTS# input de-asserts HIGH. Data transmission resumes when CTS# returns LOW.

4.20 Software Flow Control Registers (XOFF1, XOFF2, XON1, XON2) - Read/Write

These registers are used as the programmable software flow control characters xoff1, xoff2, xon1, and xon2. For more details, see Table 7.

The product (or products) mentioned in this data sheet are no longer being manufactured and may not be ordered (OBS)

TABLE 17: UART RESET CONDITIONS FOR CHANNEL A AND B

REGISTERS	RESET STATE
DLM and DLL	Bits 15-0 = 0x0001. Only resets during a power up. It doesn't reset when the Reset Pin is asserted.
RHR	Bits 7-0 = 0xXX
THR	Bits 7-0 = 0xXX
IER	Bits 7-0 = 0x00
FCR	Bits 7-0 = 0x00
ISR	Bits 7-0 = 0x01
LCR	Bits 7-0 = 0x00
MCR	Bits 7-0 = 0x00
LSR	Bits 7-0 = 0x60
MSR	Bits 3-0 = Logic 0 Bits 7-4 = Logic levels of the inputs inverted
SPR	Bits 7-0 = 0xFF
EMSR	Bits 7-0 = 0x80
FLVL	Bits 7-0 = 0x00
EFR	Bits 7-0 = 0x00
XON1	Bits 7-0 = 0x00
XON2	Bits 7-0 = 0x00
XOFF1	Bits 7-0 = 0x00
XOFF2	Bits 7-0 = 0x00
FC	Bits 7-0 = 0x00
I/O SIGNALS	**RESET STATE**
TX	HIGH
OP2#	HIGH
RTS#	HIGH
DTR#	HIGH
RXRDY#	HIGH
TXRDY#	LOW
INT	Three-State Condition

The product (or products) mentioned in this data sheet are no longer being manufactured and may not be ordered (OBS)

ABSOLUTE MAXIMUM RATINGS

Power Supply Range	7 Volts
Voltage at Any Pin	GND-0.3 V to 7 V
Operating Temperature	-40° to +85°C
Storage Temperature	-65° to +150°C
Package Dissipation	500 mW

ELECTRICAL CHARACTERISTICS

TYPICAL PACKAGE THERMAL RESISTANCE DATA (MARGIN OF ERROR: ± 15%)

Thermal Resistance (48-TQFP)	theta-ja =59°C/W, theta-jc = 16°C/W

The product (or products) mentioned in this datasheet are no longer being manufactured and may not be ordered (OBS)

DC ELECTRICAL CHARACTERISTICS

UNLESS OTHERWISE NOTED: TA=0° TO 70°C (-40° TO +85°C FOR INDUSTRIAL GRADE PACKAGE), VCC=2.25- 5.5V

SYMBOL	PARAMETER	LIMITS 2.5V MIN	LIMITS 2.5V MAX	LIMITS 3.3V MIN	LIMITS 3.3V MAX	LIMITS 5.0V MIN	LIMITS 5.0V MAX	UNITS	CONDITIONS
V_{ILCK}	Clock Input Low Level	-0.3	0.6	-0.3	0.6	-0.5	0.6	V	
V_{IHCK}	Clock Input High Level	2.0	VCC	2.4	VCC	3.0	VCC	V	
V_{IL}	Input Low Voltage	-0.3	0.8	-0.3	0.8	-0.5	0.8	V	
V_{IH}	Input High Voltage	2.0	5.5	2.0	5.5	2.2	5.5	V	
V_{OL}	Output Low Voltage						0.4	V	I_{OL} = 6 mA
					0.4			V	I_{OL} = 4 mA
			0.4					V	I_{OL} = 2 mA
V_{OH}	Output High Voltage					2.4		V	I_{OH} = -6 mA
				2.0				V	I_{OH} = -1 mA
		1.8						V	I_{OH} = -400 uA
I_{IL}	Input Low Leakage Current		±10		±10		±10	uA	
I_{IH}	Input High Leakage Current		±10		±10		±10	uA	
C_{IN}	Input Pin Capacitance		5		5		5	pF	
I_{CC}	Power Supply Current		1.2		2		5	mA	
I_{SLEEP} I_{PWRSV}	Sleep Current/ Powersave Current		6		15		30	uA	See Test 1

Test 1: The following inputs must remain steady at VCC or GND state to minimize sleep current: A0-A2, D0-D7, IOR#, IOW# (R/W#), CSA# (CS#), CSB# (A3) and all modem inputs. Also, RXA and RXB inputs must idle at logic 1 state while asleep. Floating inputs may result in sleep currents in the mA range.

For PowerSave, the UART internally isolates all of these inputs (except the modem inputs) therefore eliminating any unnecessary external buffers to keep the inputs steady. SEE"POWERSAVE FEATURE" ON PAGE 20.

AC ELECTRICAL CHARACTERISTICS

UNLESS OTHERWISE NOTED: TA=0° TO 70°C (-40° TO +85°C FOR INDUSTRIAL GRADE PACKAGE), VCC=2.25 - 5.5V, 70 PF LOAD WHERE APPLICABLE

SYMBOL	PARAMETER	LIMITS 2.5		LIMITS 3.3		LIMITS 5.0		UNIT
		MIN	MAX	MIN	MAX	MIN	MAX	
-	Crystal Frequency		16		20		24	MHz
CLK	External Clock Low/High Time	20		15		10		ns
OSC	External Clock Frequency		24		33		50	MHz
T_{AS}	Address Setup Time (16 Mode)	10		10		10		ns
T_{AH}	Address Hold Time (16 Mode)	10		10		10		ns
T_{CS}	Chip Select Width (16 Mode)	150		75		50		ns
T_{RD}	IOR# Strobe Width (16 Mode)	150		75		50		ns
T_{DY}	Read Cycle Delay (16 Mode)	150		75		50		ns
T_{RDV}	Data Access Time (16 Mode)		135		70		45	ns
T_{DD}	Data Disable Time (16 Mode)	0	45	0	30	0	30	ns
T_{WR}	IOW# Strobe Width (16 Mode)	150		75		50		ns
T_{DY}	Write Cycle Delay (16 Mode)	150		75		50		ns
T_{DS}	Data Setup Time (16 Mode)	25		20		15		ns
T_{DH}	Data Hold Time (16 Mode)	15		10		10		ns
T_{ADS}	Address Setup (68 Mode)	10		10		10		ns
T_{ADH}	Address Hold (68 Mode)	10		10		10		ns
T_{RWS}	R/W# Setup to CS# (68 Mode)	10		10		10		ns
T_{RDA}	Read Data Access (68 mode)		135		70		45	ns
T_{RDH}	Read Data Disable (68 mode)		45		30		30	ns
T_{WDS}	Write Data Setup (68 mode)	25		20		15		ns
T_{WDH}	Write Data Hold (68 Mode)	15		10		10		ns
T_{RWH}	CS# De-asserted to R/W# De-asserted (68 Mode)	15		10		10		ns
T_{CSL}	CS# Width (68 Mode)	150		75		50		ns
T_{CSD}	CS# Cycle Delay (68 Mode)	150		75		50		ns

The product (or products) mentioned in this data sheet are no longer being manufactured and may not be ordered (OBS)

AC ELECTRICAL CHARACTERISTICS

UNLESS OTHERWISE NOTED: TA=0° TO 70°C (-40° TO +85°C FOR INDUSTRIAL GRADE PACKAGE), VCC=2.25 - 5.5V, 70 PF LOAD WHERE APPLICABLE

SYMBOL	PARAMETER	LIMITS 2.5		LIMITS 3.3		LIMITS 5.0		UNIT
		MIN	MAX	MIN	MAX	MIN	MAX	
T_{WDO}	Delay From IOW# To Output		150		75		50	ns
T_{MOD}	Delay To Set Interrupt From MODEM Input		150		75		50	ns
T_{RSI}	Delay To Reset Interrupt From IOR#		150		75		50	ns
T_{SSI}	Delay From Stop To Set Interrupt		1		1		1	Bclk
T_{RRI}	Delay From IOR# To Reset Interrupt		150		75		50	ns
T_{SI}	Delay From Stop To Interrupt		150		75		50	ns
T_{INT}	Delay From Initial INT Reset To Transmit Start	8	24	8	24	8	24	Bclk
T_{WRI}	Delay From IOW# To Reset Interrupt		150		75		50	ns
T_{SSR}	Delay From Stop To Set RXRDY#		1		1		1	Bclk
T_{RR}	Delay From IOR# To Reset RXRDY#		150		75		50	ns
T_{WT}	Delay From IOW# To Set TXRDY#		150		75		50	ns
T_{SRT}	Delay From Center of Start To Reset TXRDY#		8		8		8	Bclk
T_{RST}	Reset Pulse Width	40		40		40		ns
N	Baud Rate Divisor	1	2^{16}-1	1	2^{16}-1	1	2^{16}-1	-
Bclk	Baud Clock	16X or 8X of data rate						Hz

The Product (or products) mentioned in this data sheet are no longer being manufactured and may not be ordered (OBS)

FIGURE 14. CLOCK TIMING

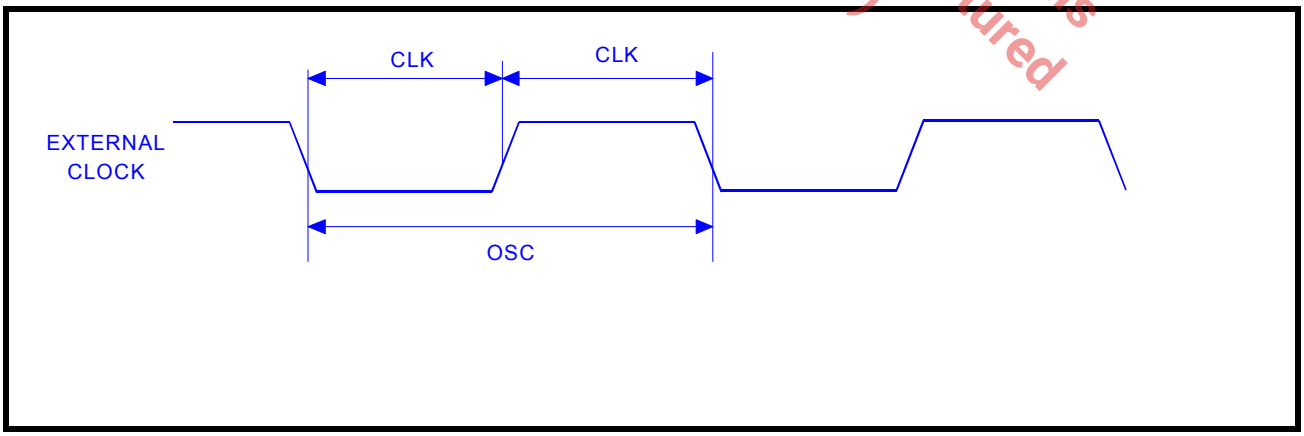

FIGURE 15. MODEM INPUT/OUTPUT TIMING FOR CHANNELS A & B

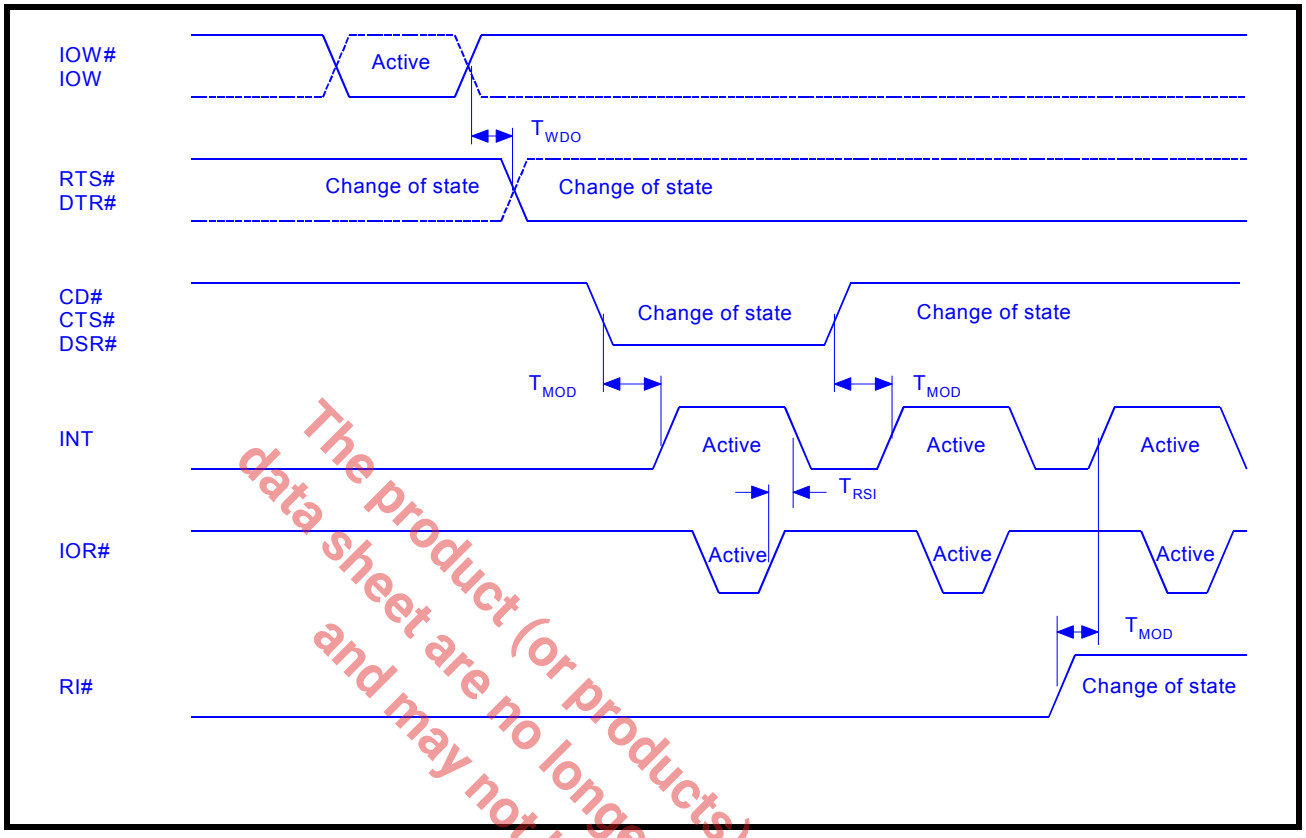

The product (or products) mentioned in this data sheet are no longer being manufactured and may not be ordered (OBS)

FIGURE 16. 16 MODE (INTEL) DATA BUS READ TIMING

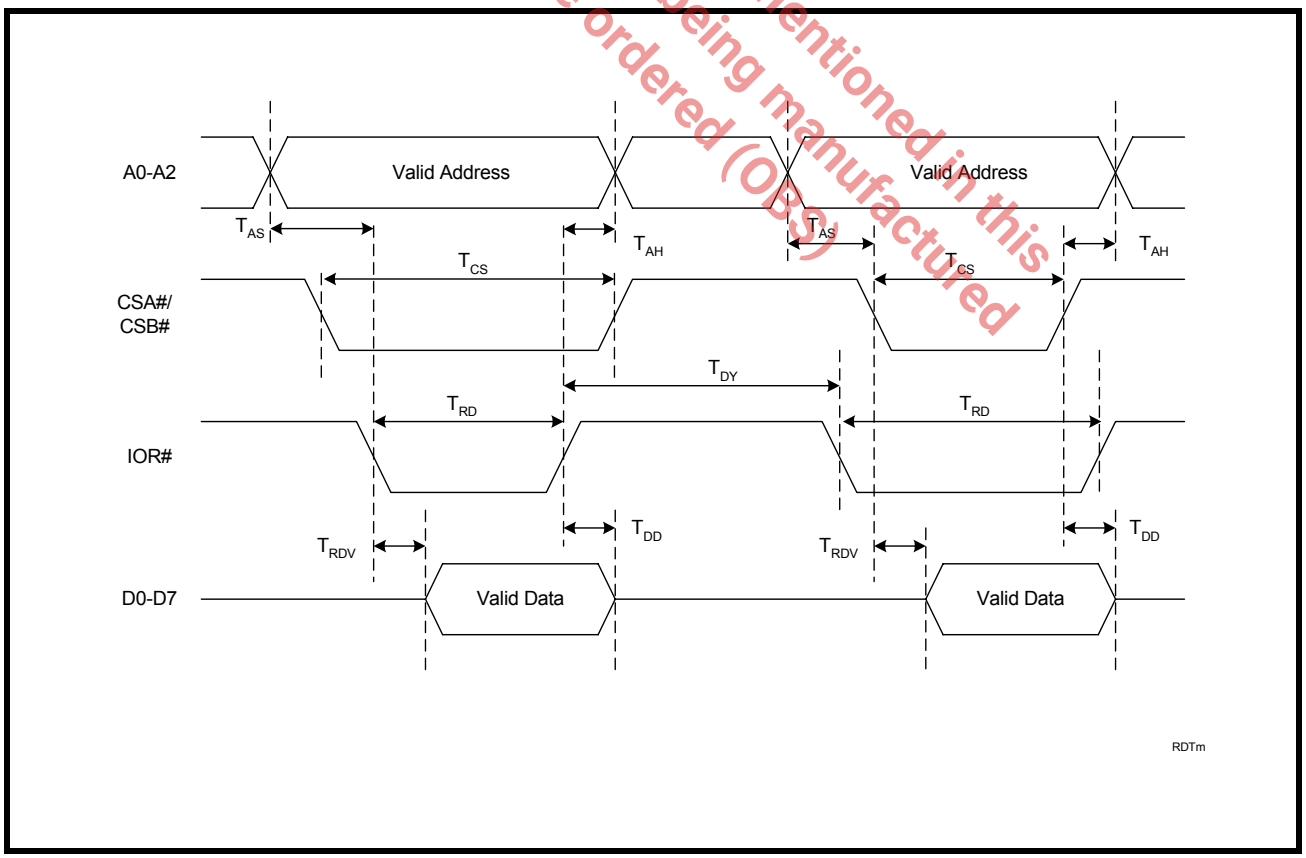

FIGURE 17. 16 MODE (INTEL) DATA BUS WRITE TIMING

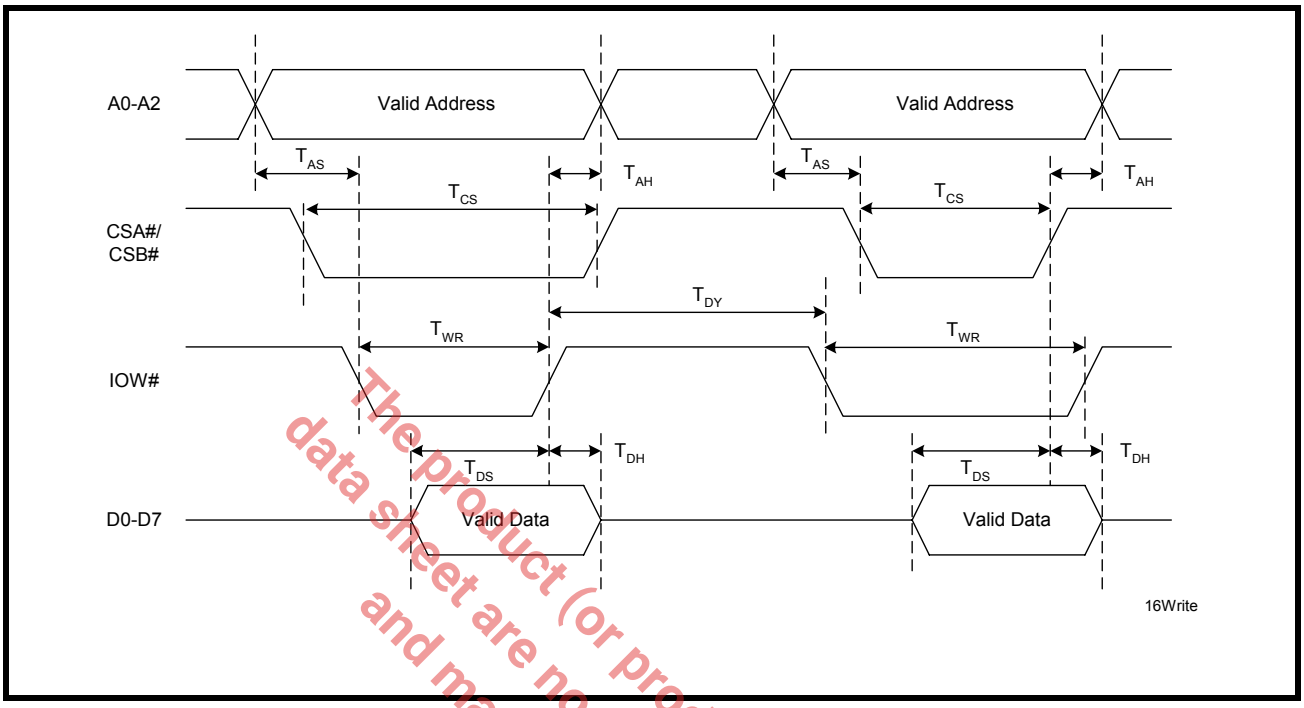

FIGURE 18. 68 MODE (MOTOROLA) DATA BUS READ TIMING

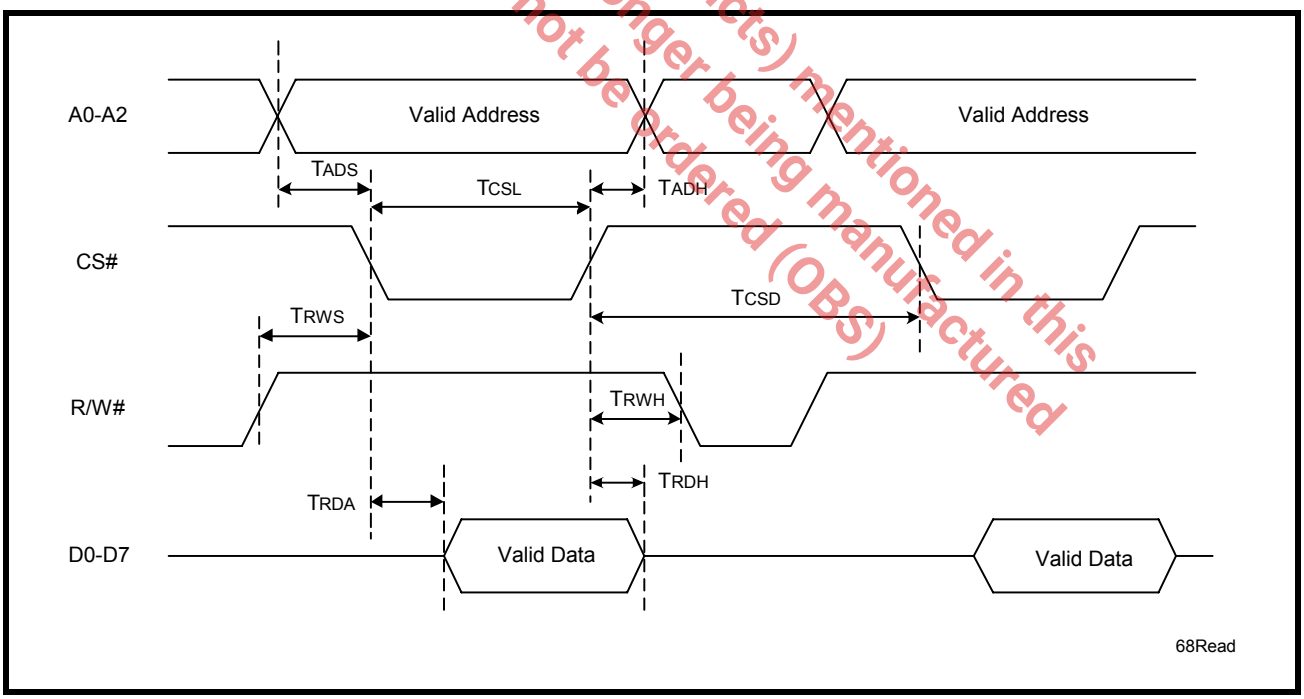

The product (or products) mentioned in this data sheet are no longer being manufactured and may not be ordered (OBS)

FIGURE 19. 68 MODE (MOTOROLA) DATA BUS WRITE TIMING

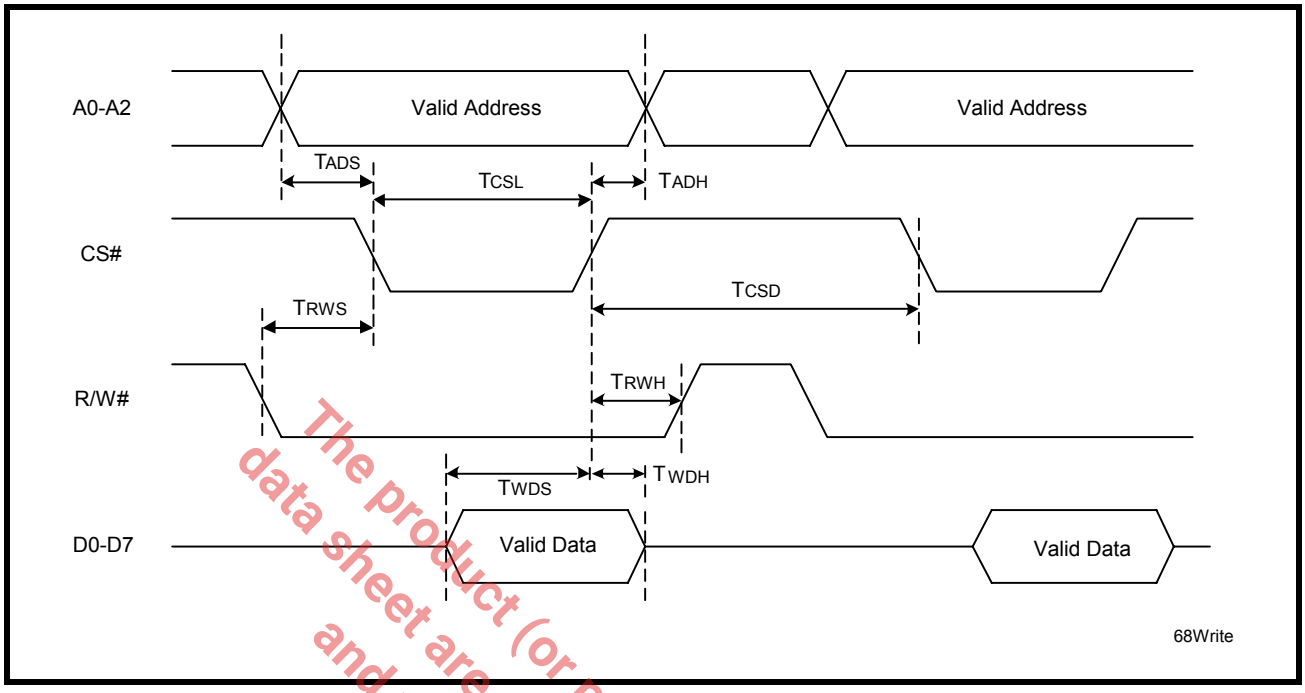

FIGURE 20. RECEIVE READY & INTERRUPT TIMING [NON-FIFO MODE] FOR CHANNELS A & B

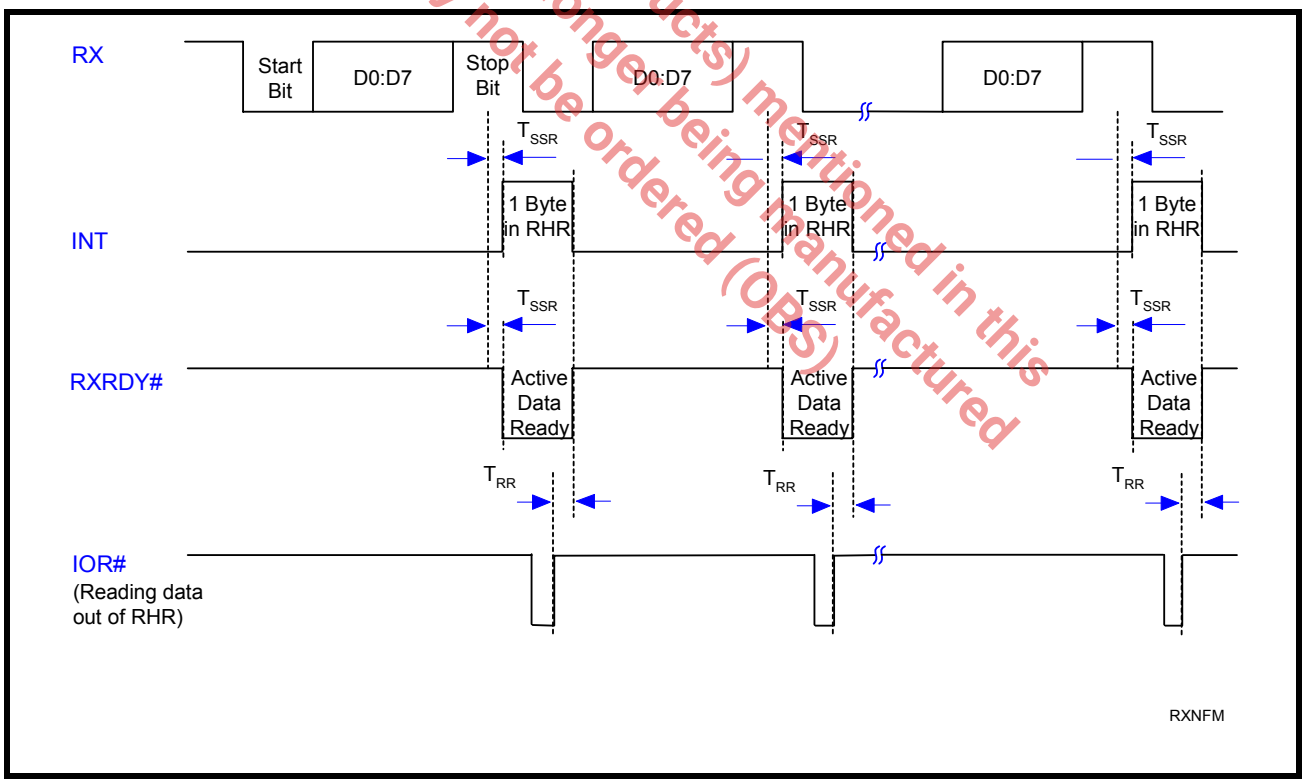

The product (or products) mentioned in this data sheet are no longer being manufactured and may not be ordered (OBS)

FIGURE 21. TRANSMIT READY & INTERRUPT TIMING [NON-FIFO MODE] FOR CHANNELS A & B

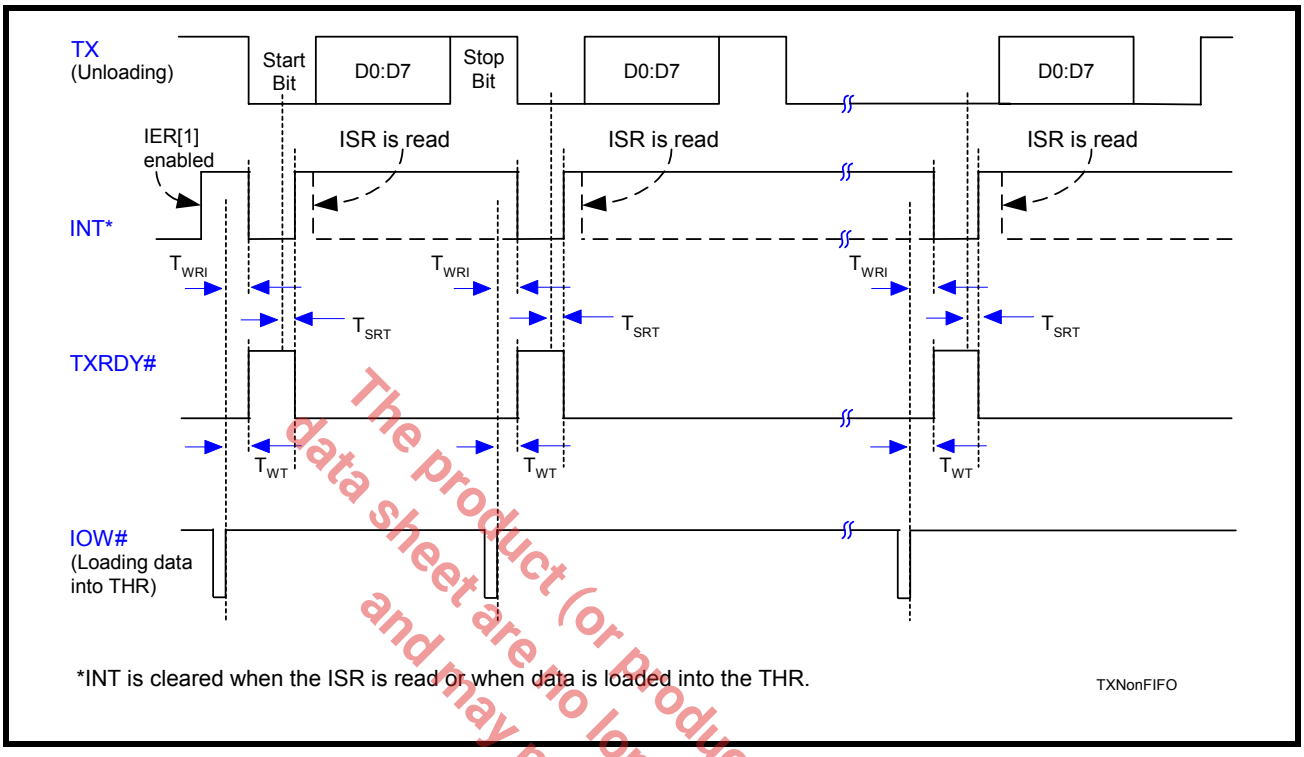

FIGURE 22. RECEIVE READY & INTERRUPT TIMING [FIFO MODE, DMA DISABLED] FOR CHANNELS A & B

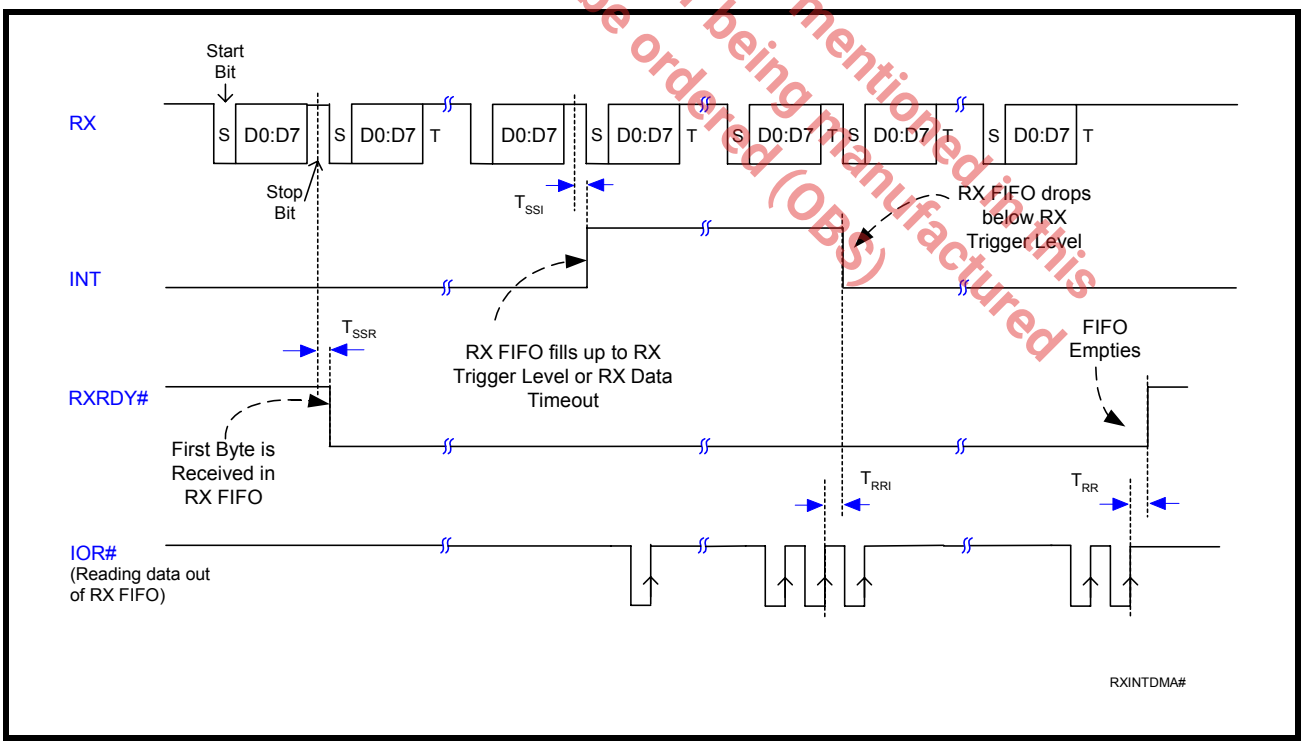

The product (or products) mentioned in this data sheet are no longer being manufactured and may not be ordered (OBS)

FIGURE 23. RECEIVE READY & INTERRUPT TIMING [FIFO MODE, DMA ENABLED] FOR CHANNELS A & B

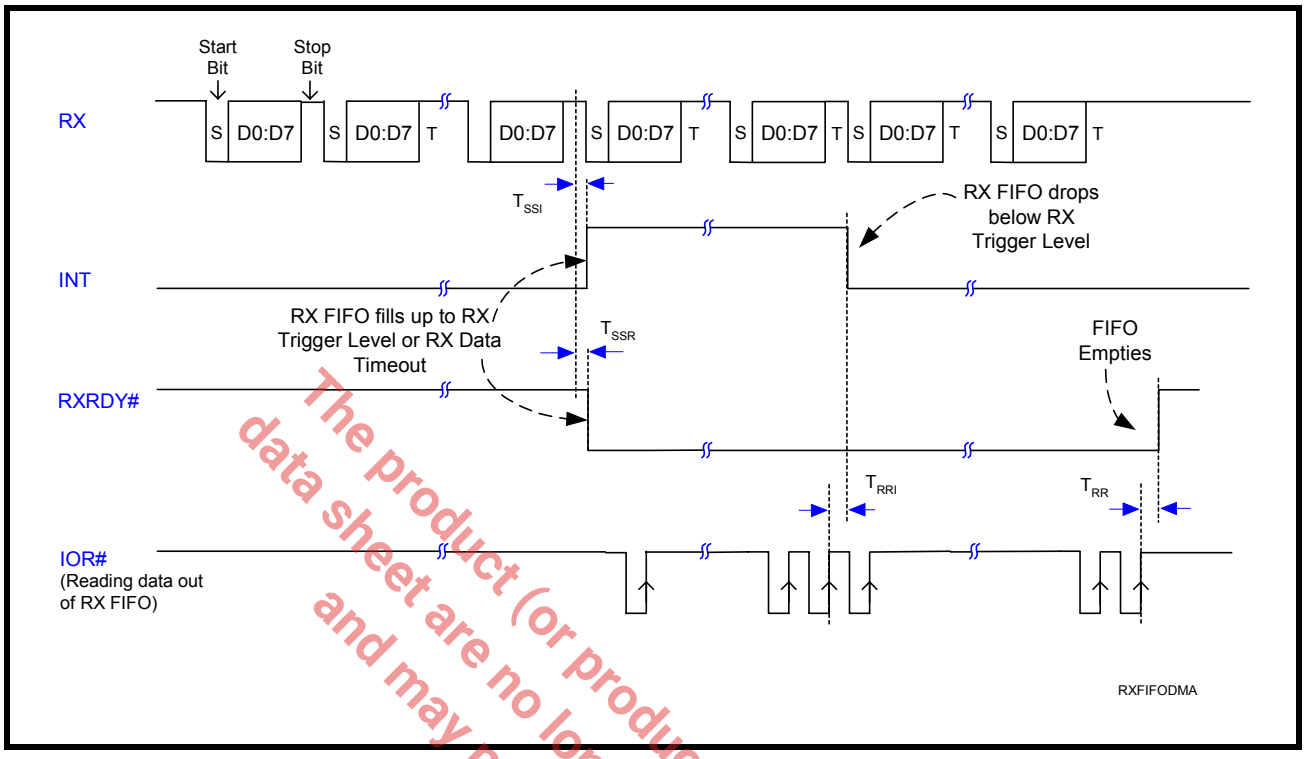

FIGURE 24. TRANSMIT READY & INTERRUPT TIMING [FIFO MODE, DMA MODE DISABLED] FOR CHANNELS A & B

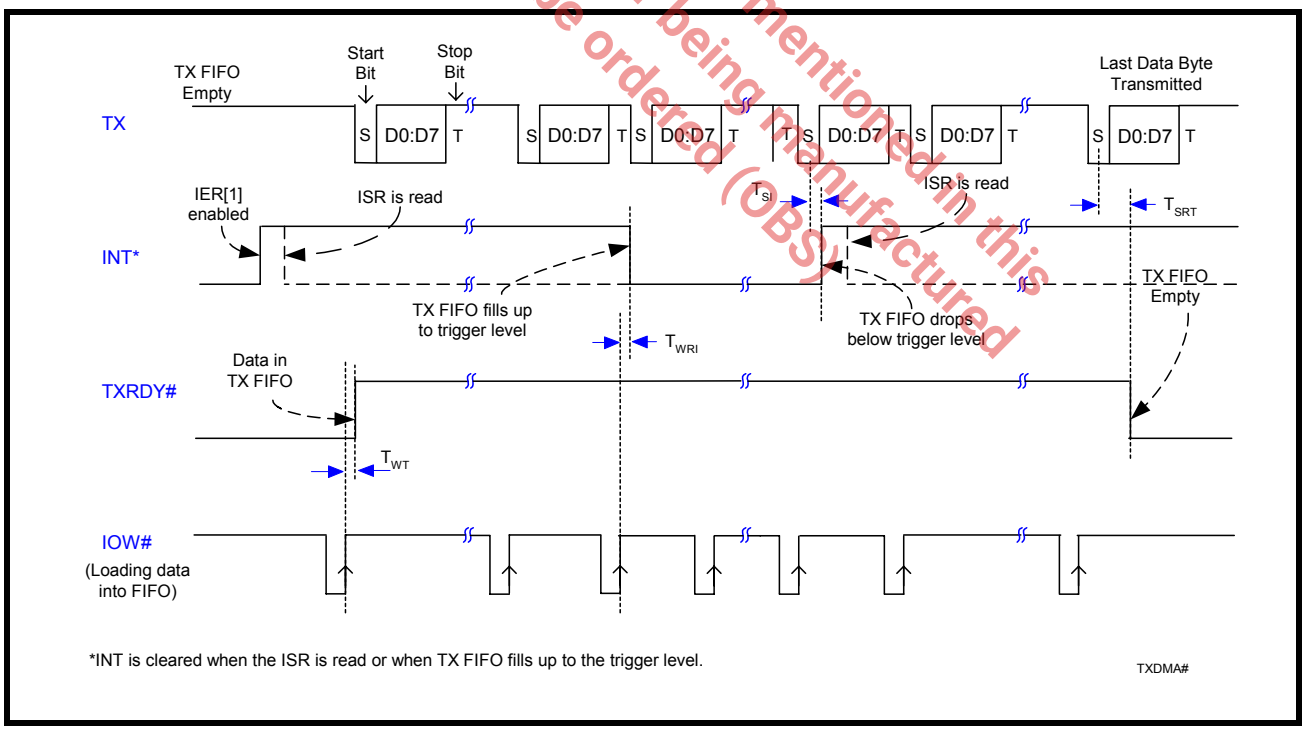

The product (or products) mentioned in this data sheet are no longer being manufactured and may not be ordered (OBS)

FIGURE 25. TRANSMIT READY & INTERRUPT TIMING [FIFO MODE, DMA MODE ENABLED] FOR CHANNELS A & B

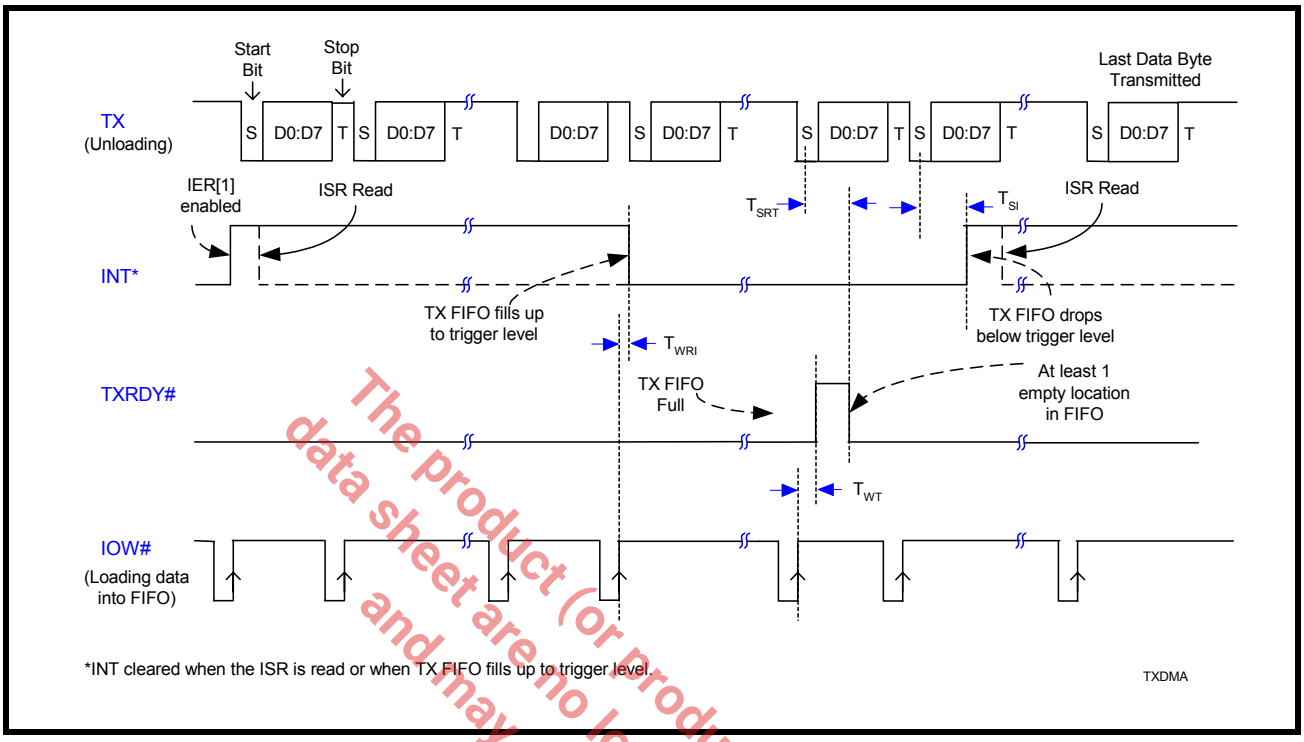

The product (or products) mentioned in this data sheet are no longer being manufactured and may not be ordered (OBS)

PACKAGE DIMENSIONS (48 PIN TQFP - 7 X 7 X 1 mm)

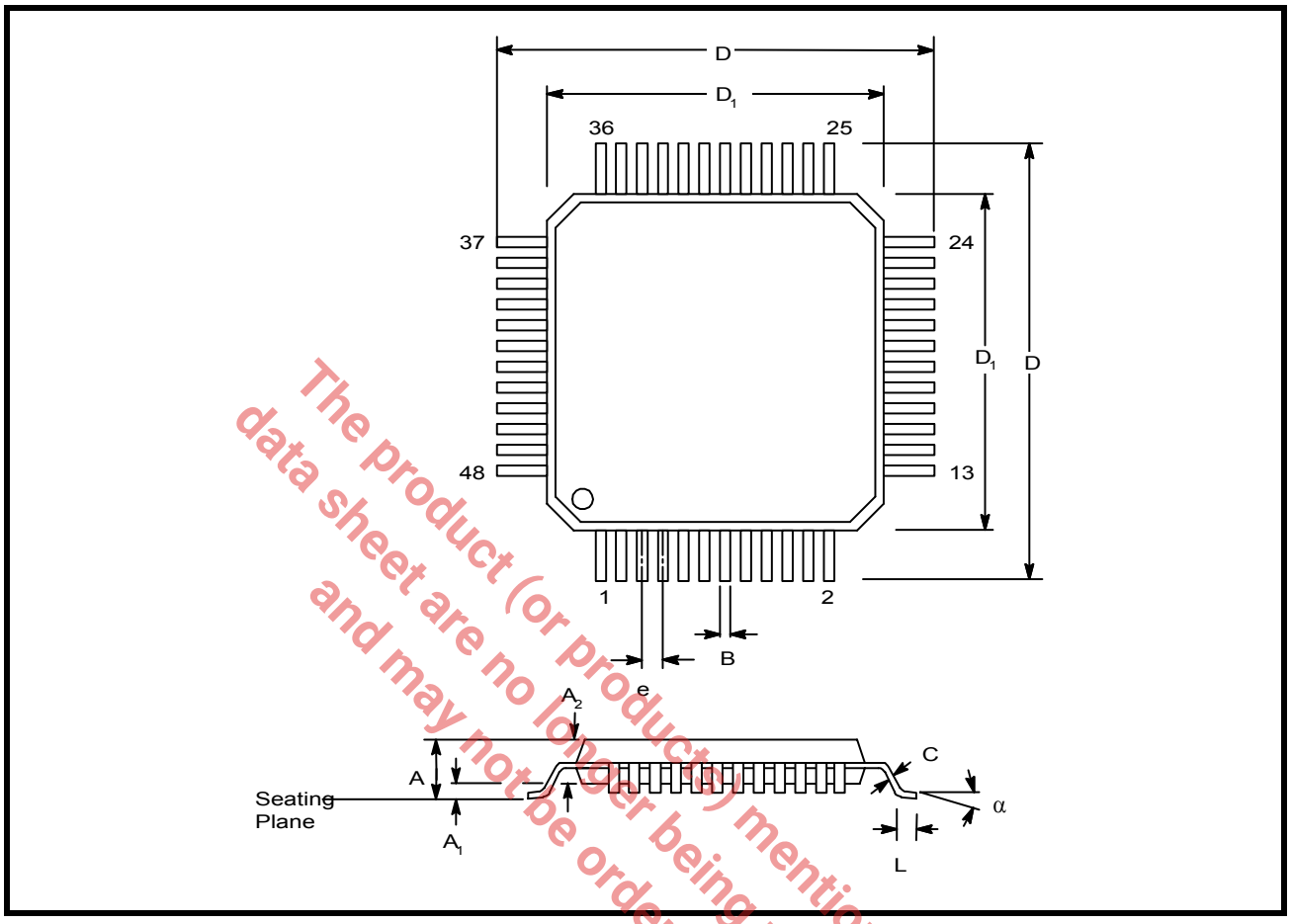

The product (or products) mentioned in this data sheet are no longer being manufactured and may not be ordered (OBS)

Note: The control dimension is the millimeter column

SYMBOL	INCHES		MILLIMETERS	
	MIN	MAX	MIN	MAX
A	0.039	0.047	1.00	1.20
A_1	0.002	0.006	0.05	0.15
A_2	0.037	0.041	0.95	1.05
B	0.007	0.011	0.17	0.27
C	0.004	0.008	0.09	0.20
D	0.346	0.362	8.80	9.20
D_1	0.272	0.280	6.90	7.10
e	0.020 BSC		0.50 BSC	
L	0.018	0.030	0.45	0.75
a	0°	7°	0°	7°

REVISION HISTORY

DATE	REVISION	DESCRIPTION
November 2001	Rev P1.0.0	Prelim data sheet.
March 2002	Rev P1.1.0	Corrected INT output descriptions and reset state. Clarified MCR bit-3 description. Added 68 Mode (Motorola) Data bus timing specs. Renamed Sclk to Bclk. Changed A0-A7 in **Figures 16** through **19** to A0-A2.
September 2002	Rev 1.0.0	Release into production. Clarified RTS# pin descriptions, XTAL1 pin description, external clock description, auto RS485 half-duplex control description, EMSR bit-3 description and updated 2.5 V, I_{CC} and I_{SLEEP} DC Electrical Characteristics.
March 2003	Rev 1.1.0	Updated AC Electrical Characteristics.
August 2004	Rev 1.2.0	Added Device Status to Ordering Information. Clarified pin descriptions- changed from using logic 1 and logic 0 to HIGH (VCC) and LOW (GND) for input and output pin descriptions.
April 2005	Rev 1.2.1	Updated the Data Access Times (T_{RDV} and T_{RDA}) in AC Electrical Characteristics.
October 2005	Rev 1.2.2	Clarified Wake-up Indicator interrupt in Sleep Mode description in **"Section 2.20, Sleep Mode with Wake-Up Indicator and PowerSave Feature" on page 20** and **"Section 4.4, Interrupt Status Register (ISR) - Read-Only" on page 26**.
April 2010	Rev 1.2.3	Corrected auto RS-485 half duplex direction control feature. It does not support turn-around delay.

The product (s) mentioned in this data sheet are no longer being manufactured and may not be ordered (OBS)

NOTICE

EXAR Corporation reserves the right to make changes to the products contained in this publication in order to improve design, performance or reliability. EXAR Corporation assumes no responsibility for the use of any circuits described herein, conveys no license under any patent or other right, and makes no representation that the circuits are free of patent infringement. Charts and schedules contained here in are only for illustration purposes and may vary depending upon a user's specific application. While the information in this publication has been carefully checked; no responsibility, however, is assumed for inaccuracies.

EXAR Corporation does not recommend the use of any of its products in life support applications where the failure or malfunction of the product can reasonably be expected to cause failure of the life support system or to significantly affect its safety or effectiveness. Products are not authorized for use in such applications unless EXAR Corporation receives, in writing, assurances to its satisfaction that: (a) the risk of injury or damage has been minimized; (b) the user assumes all such risks; (c) potential liability of EXAR Corporation is adequately protected under the circumstances.

Copyright 2010 EXAR Corporation

Datasheet April 2010.

Send your UART technical inquiry with technical details to hotline: **uarttechsupport@exar.com**.

Reproduction, in part or whole, without the prior written consent of EXAR Corporation is prohibited.