GENERAL DESCRIPTION

The XR16C2850[1] (2850) is an enhanced dual universal asynchronous receiver and transmitter (UART). Enhanced features include 128 bytes of TX and RX FIFOs, programmable TX and RX FIFO trigger level, FIFO level counters, automatic (RTS/CTS) hardware and (Xon/Xoff) software flow control, automatic RS-485 half duplex direction control output and data rates up to 6.25 Mbps at 5V and 8X sampling clock. Onboard status registers provide the user with operational status and data error flags. An internal loopback capability allows system diagnostics. The 2850 has a full modem interface and can operate at 2.97V to 5.5V and is pin-to-pin compatible to Exar's ST16C2550 and XR16C2750 except the 48-TQFP package. The 2850 register set is compatible to the industry standard ST16C2550 and is available in 48-pin TQFP and 44-pin PLCC packages.

NOTE: *1 Covered by U.S. Patent #5,649,122 and #5,949,787*

APPLICATIONS

- Portable Appliances
- Telecommunication Network Routers
- Ethernet Network Routers
- Cellular Data Devices
- Factory Automation and Process Controls

FEATURES

Added feature in devices with a top mark date code of "F2 YYWW" and newer:

- 5V tolerant inputs
- 0 ns address hold time (T_{AH})

- Pin-to-pin compatible and functionally compatible to Exar's ST16C2550 and XR16L2750 and TI's TL16C752B in the 48-TQFP package
- Pin-alike Exar's XR16L2750 and ST16C2550 48-TQFP package but with additional CLK8/16, CLKSEL and HDCNTL inputs
- Two independent UART channels
  - Register set compatible to 16C550
  - Up to 6.25 Mbps at 5V, and 4 Mbps at 3.3V
  - Transmit and Receive FIFOs of 128 bytes
  - Programmable TX and RX FIFO Trigger Levels
  - Transmit and Receive FIFO Level Counters
  - Automatic Hardware (RTS/CTS) Flow Control
  - Selectable Auto RTS Flow Control Hysteresis
  - Automatic Software (Xon/Xoff) Flow Control
  - Auto RS-485 Half-duplex Direction Control
  - Wireless Infrared (IrDA 1.0) Encoder/Decoder
  - Full modem interface
- Device Identification and Revision
- Crystal oscillator or external clock input
- Industrial and commercial temperature ranges
- 48-TQFP and 44-PLCC packages

The product(or products) mentioned in this data sheet are no longer being manufactured and may not be ordered (OBS)

FIGURE 1. XR16C2850 BLOCK DIAGRAM

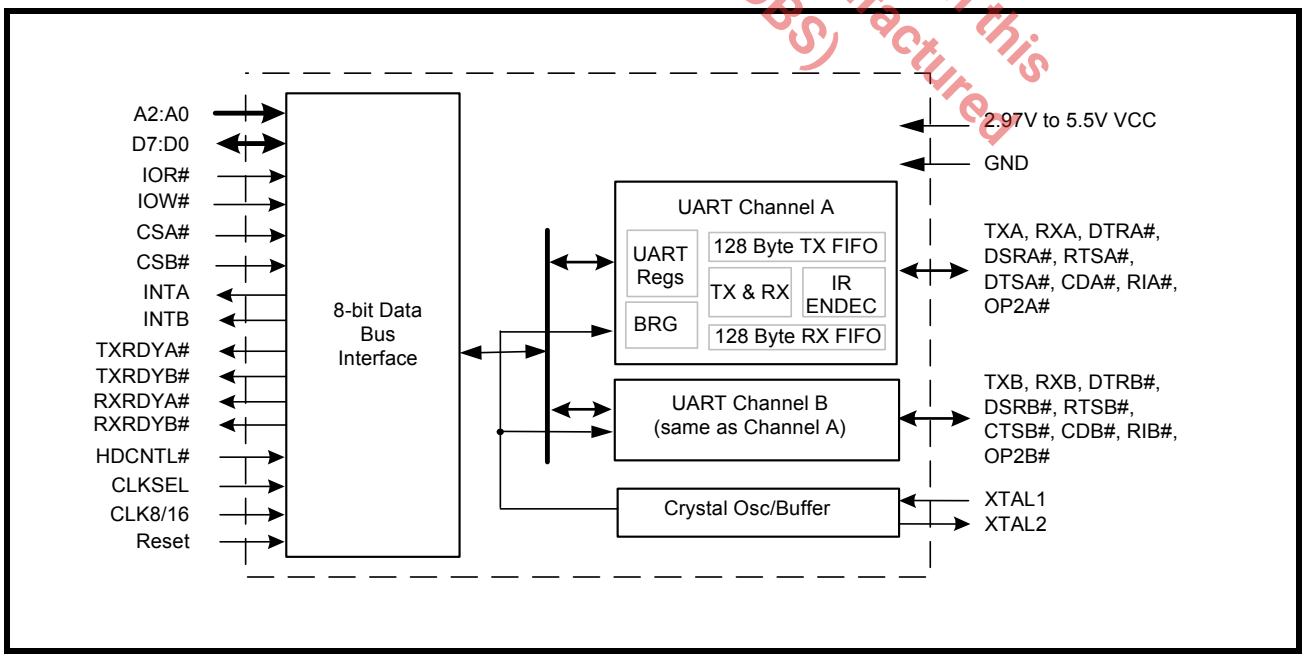

FIGURE 2. PIN OUT ASSIGNMENT

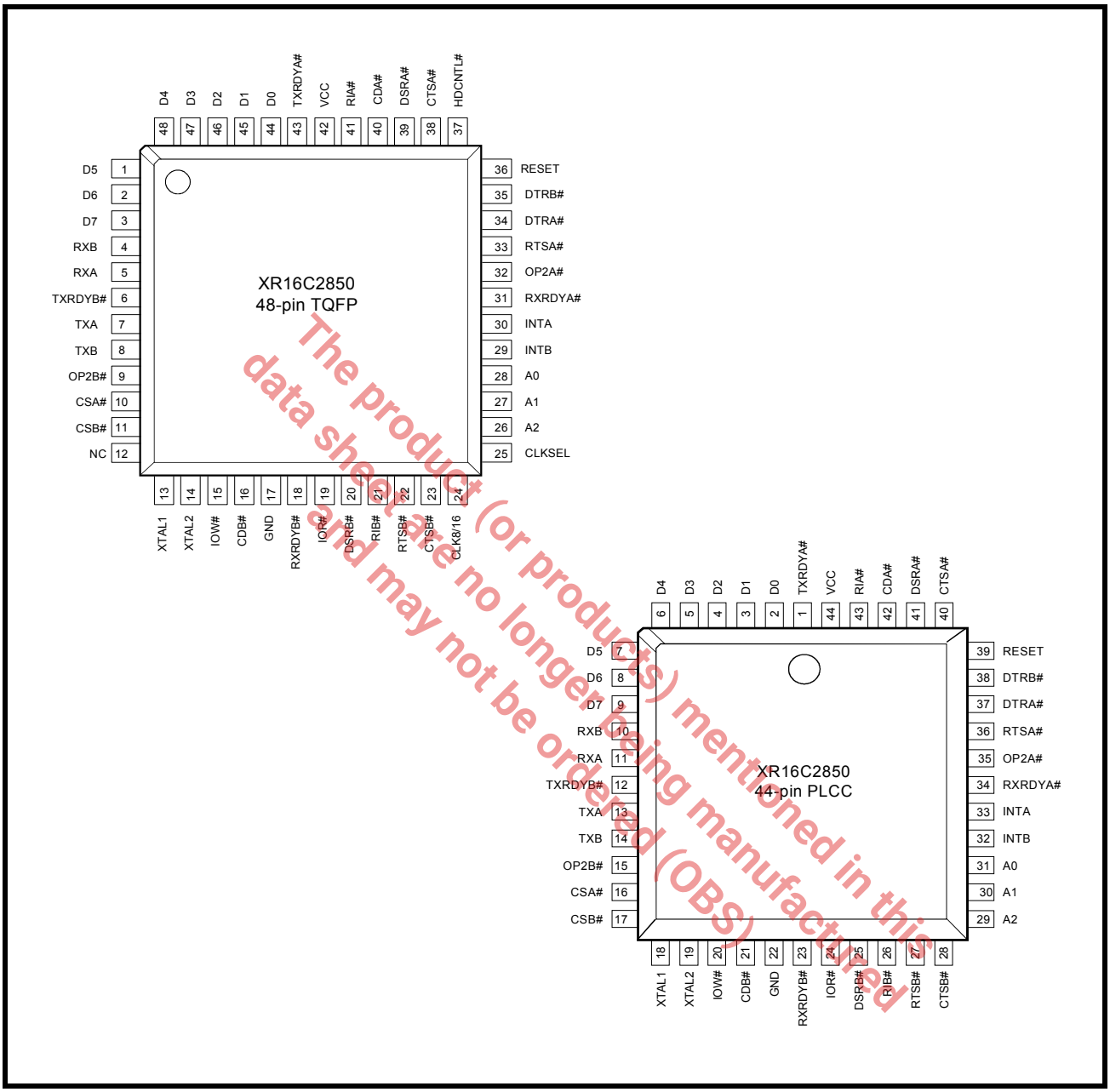

The product (or products) mentioned in this data sheet are no longer being manufactured and may not be ordered (OBS).

ORDERING INFORMATION

PART NUMBER	PACKAGE	OPERATING TEMPERATURE RANGE	DEVICE STATUS
XR16C2850CJ	44-Lead PLCC	0°C to +70°C	Active
XR16C2850CM	48-Lead TQFP	0°C to +70°C	Active
XR16C2850IJ	44-Lead PLCC	-40°C to +85°C	Active
XR16C2850IM	48-Lead TQFP	-40°C to +85°C	Active

PIN DESCRIPTIONS

NAME	44-PLCC PIN #	48-TQFP PIN #	TYPE	DESCRIPTION
DATA BUS INTERFACE				
A2 A1 A0	29 30 31	26 27 28	I	Address data lines [2:0]. These 3 address lines select one of the internal registers in UART channel A/B during a data bus transaction.
D7 D6 D5 D4 D3 D2 D1 D0	9 8 7 6 5 4 3 2	3 2 1 48 47 46 45 44	I/O	Data bus lines [7:0] (bidirectional).
IOR#	24	19	I	Input/Output Read Strobe (active low). The falling edge instigates an internal read cycle and retrieves the data byte from an internal register pointed to by the address lines [A2:A0]. The data byte is placed on the data bus to allow the host processor to read it on the rising edge.
IOW#	20	15	I	Input/Output Write Strobe (active low). The falling edge instigates an internal write cycle and the rising edge transfers the data byte on the data bus to an internal register pointed by the address lines.
CSA#	16	10	I	UART channel A select (active low) to enable UART channel A in the device for data bus operation.
CSB#	17	11	I	UART channel B select (active low) to enable UART channel B in the device for data bus operation.
INTA	33	30	O	UART channel A Interrupt output. The output state is defined by the user through the software setting of MCR[3]. INTA is set to the active mode and OP2A# output is LOW when MCR[3] is set to a logic 1. INTA is set to the three state mode and OP2A# is HIGH when MCR[3] is set to a logic 0 (default). See MCR[3]. If this output is not used, leave it unconnected.
INTB	32	29	O	UART channel B Interrupt output. The output state is defined by the user through the software setting of MCR[3]. INTB is set to the active mode and OP2B# output is LOW when MCR[3] is set to a logic 1. INTB is set to the three state mode and OP2B# is HIGH when MCR[3] is set to a logic 0 (default). See MCR[3]. If this output is not used, leave it unconnected.
TXRDYA#	1	43	O	UART channel A Transmitter Ready (active low). The output provides the TX FIFO/THR status for transmit channel A. See Table 2. If this output is not used, leave it unconnected.
RXRDYA#	34	31	O	UART channel A Receiver Ready (active low). This output provides the RX FIFO/RHR status for receive channel A. See Table 2. If this output is not used, leave it unconnected.
TXRDYB#	12	6	O	UART channel B Transmitter Ready (active low). The output provides the TX FIFO/THR status for transmit channel B. See Table 2. If this output is not used, leave it unconnected.

The product (or Products) mentioned in this data sheet are no longer being manufactured and may not be ordered (OBS)

NAME	44-PLCC PIN #	48-TQFP PIN #	TYPE	DESCRIPTION
RXRDYB#	23	18	O	UART channel B Receiver Ready (active low). This output provides the RX FIFO/RHR status for receive channel B. See Table 2. If this output is not used, leave it unconnected.
MODEM OR SERIAL I/O INTERFACE				
TXA	13	7	O	UART channel A Transmit Data or infrared encoder data. Standard transmit and receive interface is enabled when MCR[6] = 0. In this mode, the TX signal will be HIGH during reset or idle (no data). Infrared IrDA transmit and receive interface is enabled when MCR[6] = 1. In the Infrared mode, the inactive state (no data) for the Infrared encoder/ decoder interface isLOW. If this output is not used, leave it unconnected.
RXA	11	5	I	UART channel A Receive Data or infrared receive data. Normal receive data input must idle HIGH. The infrared receiver pulses typically idles LOW but can be inverted by software control prior going in to the decoder, see MCR[6] and FCTR[2]. If this pin is not used, tie it to VCC or pull it high via a 100k ohm resistor.
RTSA#	36	33	O	UART channel A Request-to-Send (active low) or general purpose output. This output must be asserted prior to using auto RTS flow control, see EFR[6], MCR[1], FCTR[1:0], EMSR[5:4] and IER[6]. For auto RS485 half-duplex direction control, see FCTR[3]. If this output is not used, leave it unconnected.
CTSA#	40	38	I	UART channel A Clear-to-Send (active low) or general purpose input. It can be used for auto CTS flow control, see EFR[7], and IER[7]. This input should be connected to VCC when not used.
DTRA#	37	34	O	UART channel A Data-Terminal-Ready (active low) or general purpose output. If this output is not used, leave it unconnected.
DSRA#	41	39	I	UART channel A Data-Set-Ready (active low) or general purpose input. This input should be connected to VCC when not used.
CDA#	42	40	I	UART channel A Carrier-Detect (active low) or general purpose input. This input should be connected to VCC when not used.
RIA#	43	41	I	UART channel A Ring-Indicator (active low) or general purpose input. This input should be connected to VCC when not used.
OP2A#	35	32	O	Output Port 2 Channel A - The output state is defined by the user and through the software setting of MCR[3]. INTA is set to the active mode and OP2A# output is LOW when MCR[3] is set to a logic 1. INTA is set to the three state mode and OP2A# is HIGH when MCR[3] is set to a logic 0. See MCR[3]. This output can only be used as a general purpose output when interrupts are not used, otherwise it will disturb the INTA output functionality. If this output is not used, leave it unconnected.
TXB	14	8	O	UART channel B Transmit Data or infrared encoder data. Standard transmit and receive interface is enabled when MCR[6] = 0. In this mode, the TX signal will be HIGH during reset or idle (no data). Infrared IrDA transmit and receive interface is enabled when MCR[6] = 1. In the Infrared mode, the inactive state (no data) for the Infrared encoder/ decoder interface is LOW. If this output is not used, leave it unconnected.

The product (s) mentioned in this data sheet are no longer being manufactured and may not be ordered (OBS)

NAME	44-PLCC PIN #	48-TQFP PIN #	TYPE	DESCRIPTION
RXB	10	4	I	UART channel B Receive Data or infrared receive data. Normal receive data input must idle HIGH. The infrared receiver pulses typically idles LOW but can be inverted by software control prior going in to the decoder, see MCR[6] and FCTR[2]. If this pin is not used, tie it to VCC or pull it high via a 100k ohm resistor.
RTSB#	27	22	O	UART channel B Request-to-Send (active low) or general purpose output. This port must be asserted prior to using auto RTS flow control, see EFR[6], MCR[1], FCTR[1:0], EMSR[5:4] and IER[6]. For auto RS485 half-duplex direction control, see FCTR[3] and EMSR[3]. If this output is not used, leave it unconnected.
CTSB#	28	23	I	UART channel B Clear-to-Send (active low) or general purpose input. It can be used for auto CTS flow control, see EFR[7], and IER[7]. This input should be connected to VCC when not used.
DTRB#	38	35	O	UART channel B Data-Terminal-Ready (active low) or general purpose output. If this output is not used, leave it unconnected.
DSRB#	25	20	I	UART channel B Data-Set-Ready (active low) or general purpose input. This input should be connected to VCC when not used. This input has no effect on the UART.
CDB#	21	16	I	UART channel B Carrier-Detect (active low) or general purpose input. This input should be connected to VCC when not used. This input has no effect on the UART.
RIB#	26	21	I	UART channel B Ring-Indicator (active low) or general purpose input. This input should be connected to VCC when not used. This input has no effect on the UART.
OP2B#	15	9	O	Output Port 2 Channel B - The output state is defined by the user and through the software setting of MCR[3]. INTB is set to the active mode and OP2B# output is LOW when MCR[3] is set to a logic 1. INTB is set to the three state mode and OP2B# is HIGH when MCR[3] is set to a logic 0. See MCR[3]. This output can only be used as a general purpose output when interrupts are not used, otherwise it will disturb the INTB output functionality. If this output is not used, leave it unconnected.
ANCILLARY SIGNALS				
XTAL1	18	13	I	Crystal or external clock input.
XTAL2	19	14	O	Crystal or buffered clock output.
HDCNTL#	-	37	I	RS-485 half duplex directional control for channel A and B (active low). Connect to VCC for normal RTS# function and connect to GND for RS-485 half duplex direction control. RTS# pin goes LOW for transmit and HIGH for receive during RS-485 mode. This pin is wire “OR-ed” with FCTR[3]. If this pin is connected to VCC, the function of the RTS# pin can be controlled via FCTR[3]. If this pin is connected to GND, the RTS# pin will always be the RS-485 half duplex direction control and can not be controlled via FCTR[3]. See FCTR[3].

The product (or Products) mentioned in this data sheet are no longer being manufactured and may not be ordered (OBS)

NAME	44-PLCC PIN #	48-TQFP PIN #	TYPE	DESCRIPTION
CLKSEL	-	25	I	Clock Pre-scaler select. Connect to VCC for divide by 1 and GND for divide by 4. MCR[7] can override the state of this pin following reset or initialization. See **Figure 6** and MCR[7].
CLK8/16	-	24	I	Transmit/Receive data sampling rate. Connect to VCC for normal 16X sampling clock (standard baud rates) or GND for 8X sampling clock to double the standard baud rates.
RESET	39	36	I	Reset (active high) - A longer than 40 ns HIGH pulse on this pin will reset the internal registers and all outputs. The UART transmitter output will be held at logic 1, the receiver input will be ignored and outputs are reset during reset period (see Table 16).
VCC	44	42	Pwr	2.97V to 5.5V power supply. All inputs are 5V tolerant for devices with top mark date code of "F2 YYWW" and newer.
GND	22	17	Pwr	Power supply common, ground.
N.C.	none	12		No Connection.

Pin type: I=Input, O=Output, I/O= Input/output, OD=Output Open Drain.

The product (or products) mentioned in this data sheet are no longer being manufactured and may not be ordered (OBS)

1.0 PRODUCT DESCRIPTION

The XR16C2850 (2850) integrates the functions of 2 enhanced 16C550 Universal Asynchrounous Receiver and Transmitter (UART). Each UART is independently controlled having its own set of device configuration registers. The configuration registers set is 16550 UART compatible for control, status and data transfer. Additionally, each UART channel has 128-bytes of transmit and receive FIFOs, automatic RTS/CTS hardware flow control with hysteresis control, automatic Xon/Xoff and special character software flow control, programmable transmit and receive FIFO trigger levels, FIFO level counters, infrared encoder and decoder (IrDA ver 1.0), programmable baud rate generator with a prescaler of divide by 1 or 4, and data rate up to 6.25 Mbps with 8X sampling clock rate (available only in the 48-pin TQFP package) or 3.125Mbps in the 16X rate. The XR16C2850 is a 5V and 3.3V device. The 2850 is fabricated with an advanced CMOS process.

Enhanced Features

The 2850 DUART provides a solution that supports 128 bytes of transmit and receive FIFO memory, instead of 64 bytes provided in the XR16L2750 and 16 bytes in the ST16C2550, or one byte in the ST16C2450. The 2850 is designed to work with high performance data communication systems, that require fast data processing time. Increased performance is realized in the 2850 by the larger transmit and receive FIFOs, FIFO trigger level control, FIFO level counters and automatic flow control mechanism. This allows the external processor to handle more networking tasks within a given time. For example, the ST16C2550 with a 16 byte FIFO, unloads 16 bytes of receive data in 1.53 ms (This example uses a character length of 11 bits, including start/stop bits at 115.2Kbps). This means the external CPU will have to service the receive FIFO at 1.53 ms intervals. However with the 128 byte FIFO in the 2850, the data buffer will not require unloading/loading for 12.2 ms. This increases the service interval giving the external CPU additional time for other applications and reducing the overall UART interrupt servicing time. In addition, the programmable FIFO level trigger interrupt and automatic hardware/software flow control is uniquely provided for maximum data throughput performance especially when operating in a multi-channel system. The combination of the above greatly reduces the CPU's bandwidth requirement, increases performance, and reduces power consumption.

The 2850 supports a half-duplex output direction control signaling pin, RTS# A/B, to enable and disable the external RS-485 transceiver operation. It automatically switches the logic state of the output pin to the receive state after the last stop-bit of the last character has been shifted out of the transmitter. After receiving, the logic state of the output pin switches back to the transmit state when a data byte is loaded in the transmitter. The auto RS-485 direction control pin is not activated after reset. To activate the direction control function, user has to set FCTR Bit-3 to "1". This pin is normally high for receive state, low for transmit state.

Data Rate

The 2850 is capable of operation up to 3.125 Mbps at 5V with 16X internal sampling clock rate, and 6.25 Mbps at 5V with 8X sampling clock rate (available only on the 48-pin package). The device can operate with an external 24 MHz crystal on pins XTAL1 and XTAL2, or external clock source of up to 50 MHz on XTAL1 pin. With a typical crystal of 14.7456 MHz and through a software option, the user can set the prescaler bit for data rates of up to 1.84 Mbps.

The rich feature set of the 2850 is available through the internal registers. Automatic hardware/software flow control, selectable transmit and receive FIFO trigger levels, selectable TX and RX baud rates, infrared encoder/decoder interface, modem interface controls, and a sleep mode are all standard features.

Following a power on reset or an external reset, the 2850 is software compatible with previous generation of UARTs, 16C2450, 16C2550 and 16L2750.

The product (or product) mentioned in this data sheet are no longer being manufactured and may not be ordered (OBS)

2.0 FUNCTIONAL DESCRIPTIONS

2.1 CPU Interface

The CPU interface is 8 data bits wide with 3 address lines and control signals to execute data bus read and write transactions. The 2850 data interface supports the Intel compatible types of CPUs and it is compatible to the industry standard 16C550 UART. No clock (oscillator nor external clock) is required to operate a data bus transaction. Each bus cycle is asynchronous using CS#, IOR# and IOW# signals. Both UART channels share the same data bus for host operations. The data bus interconnections are shown in **Figure 3**.

FIGURE 3. XR16C2850 DATA BUS INTERCONNECTIONS

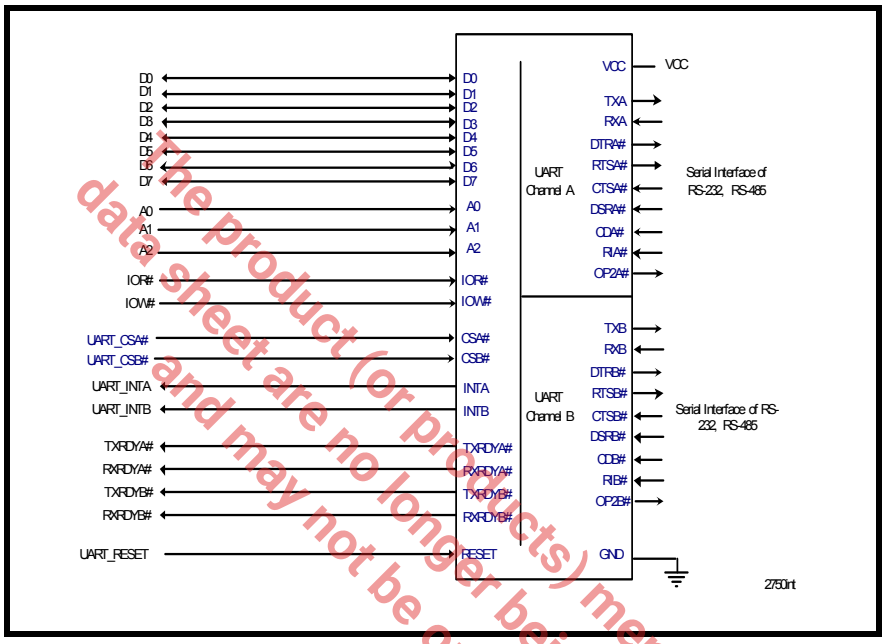

the product (or products) mentioned in this data sheet are no longer being manufactured and may not be ordered (OBS)

2.2 Device Reset

The RESET input resets the internal registers and the serial interface outputs in both channels to their default state (see Table 16). An active high pulse of longer than 40 ns duration will be required to activate the reset function in the device.

2.3 Device Identification and Revision

The XR16C2850 provides a Device Identification code and a Device Revision code to distinguish the part from other devices and revisions. To read the identification code from the part, it is required to set the baud rate generator registers DLL and DLM both to 0x00. Now reading the content of the DLM will provide 0x12 for the XR16C2850 and reading the content of DLL will provide the revision of the part; for example, a reading of 0x01 means revision A.

2.4 Channel A and B Selection

The UART provides the user with the capability to bi-directionally transfer information between an external CPU and an external serial communication device. A logic 0 on chip select pins, CSA# or CSB#, allows the user to select UART channel A or B to configure, send transmit data and/or unload receive data to/from the UART. Selecting both UARTs can be useful during power up initialization to write to the same internal registers, but do not attempt to read from both uarts simultaneously. Individual channel select functions are shown in **Table 1**.

TABLE 1: CHANNEL A AND B SELECT

CSA#	CSB#	FUNCTION
1	1	UART de-selected
0	1	Channel A selected
1	0	Channel B selected
0	0	Channel A and B selected

2.5 Channel A and B Internal Registers

Each UART channel in the 2850 has a set of enhanced registers for control, monitoring and data loading and unloading. The configuration register set is compatible to those already available in the standard single 16C550 and dual ST16C2550. These registers function as data holding registers (THR/RHR), interrupt status and control registers (ISR/IER), a FIFO control register (FCR), receive line status and control registers (LSR/LCR), modem status and control registers (MSR/MCR), programmable data rate (clock) divisor registers (DLL/DLM), and a user accessible scratchpad register (SPR).

Beyond the general 16C2550 features and capabilities, the 2850 offers enhanced feature registers (EMSR, FLVL, EFR, Xon/Xoff 1, Xon/Xoff 2, FCTR, TRG, FC) that provide automatic RTS and CTS hardware flow control, Xon/Xoff software flow control, automatic RS-485 half-duplex direction output enable/disable, FIFO trigger level control, and FIFO level counters. All the register functions are discussed in full detail later in "Section 3.0, UART INTERNAL REGISTERS" on page 21.

2.6 DMA Mode

The device does not support direct memory access. The DMA Mode (a legacy term) in this document doesn't mean "direct memory access" but refers to data block transfer operation. The DMA mode affects the state of the RXRDY# A/B and TXRDY# A/B output pins. The transmit and receive FIFO trigger levels provide additional flexibility to the user for block mode operation. The LSR bits 5-6 provide an indication when the transmitter is empty or has an empty location(s) for more data. The user can optionally operate the transmit and receive FIFO in the DMA mode (FCR bit-3=1). When the transmit and receive FIFO are enabled and the DMA mode is disabled (FCR bit-3 = 0), the 2850 is placed in single-character mode for data transmit or receive operation. When DMA mode is enabled (FCR bit-3 = 1), the user takes advantage of block mode operation by loading or unloading the FIFO in a block sequence determined by the programmed trigger level. In this mode, the 2850 sets the TXRDY# pin when the transmit FIFO becomes full, and sets the RXRDY# pin when the receive FIFO becomes empty. The following table shows their behavior. Also see Figures 20 through 25.

This product (or product line) mentioned in this data sheet may be longer being manufactured and may not be ordered (obsolete).

TABLE 2: TABLE 2TXRDY# AND RXRDY# OUTPUTS IN FIFO AND DMA MODE

PINS	FCR BIT-0=0 (FIFO DISABLED)	FCR BIT-0=1 (FIFO ENABLED)	
		FCR Bit-3 = 0 (DMA Mode Disabled)	FCR Bit-3 = 1 (DMA Mode Enabled)
RXRDY# A/B	LOW = 1 byte HIGH = no data	LOW = at least 1 byte in FIFO HIGH = FIFO empty	HIGH to LOW transition when FIFO reaches the trigger level, or timeout occurs. LOW to HIGH transition when FIFO empties.
TXRDY# A/B	LOW = THR empty HIGH = byte in THR	LOW = FIFO empty HIGH = at least 1 byte in FIFO	LOW = FIFO has at least 1 empty location HIGH = FIFO is full

2.7 INTA and INTB Ouputs

The INTA and INTB interrupt output output changes according to the operating mode and enahnced features setup. Table 3 and 4 summarize the operating behavior for the transmitter and receiver. Also see Figures 20 through 25.

TABLE 3: INTA AND INTB PINS OPERATION FOR TRANSMITTER

	Auto RS485 Mode	FCR BIT-0 = 0 (FIFO DISABLED)	FCR BIT-0 = 1 (FIFO ENABLED)
INTA/B Pin	NO	LOW = a byte in THR HIGH = THR empty	LOW = FIFO above trigger level HIGH = FIFO below trigger level or FIFO empty
INTA/B Pin	YES	LOW = a byte in THR HIGH = transmitter empty	LOW = FIFO above trigger level HIGH = FIFO below trigger level or transmitter empty

The Product (or products) mentioned in this data sheet are no longer being manufactured and may not be ordered (OBS)

TABLE 4: INTA AND INTB PIN OPERATION FOR RECEIVER

	FCR BIT-0 = 0 (FIFO DISABLED)	FCR BIT-0 = 1 (FIFO ENABLED)
INTA/B Pin	LOW = no data HIGH = 1 byte	LOW = FIFO below trigger level HIGH = FIFO above trigger level

2.8 Crystal Oscillator or External Clock Input

The 2850 includes an on-chip oscillator (XTAL1 and XTAL2) to produce a clock for both UART sections in the device. The CPU data bus does not require this clock for bus operation. The crystal oscillator provides a system clock to the Baud Rate Generators (BRG) section found in each of the UART. XTAL1 is the input to the oscillator or external clock buffer input with XTAL2 pin being the output. SEE"PROGRAMMABLE BAUD RATE GENERATOR" ON PAGE 11.

FIGURE 4. TYPICAL OSCILLATOR CONNECTIONS

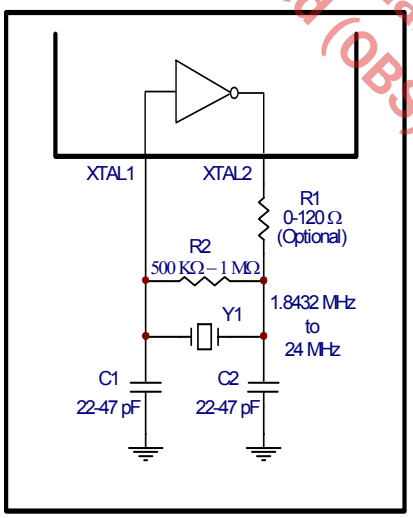

The on-chip oscillator is designed to use an industry standard microprocessor crystal (parallel resonant, fundamental frequency with 10-22 pF capacitance load, ESR of 20-120 ohms and 100 ppm frequency tolerance) connected externally between the XTAL1 and XTAL2 pins (see Figure 4). Alternatively, an external clock can be connected to the XTAL1 pin to clock the internal baud rate generator for standard or custom rates.

Typical oscillator connections are shown in Figure 4. For further reading on oscillator circuit please see application note DAN108 on EXAR's web site.

2.9 Programmable Baud Rate Generator

A single Baud Rate Generator (BRG) is provided for the transmitter and receiver, allowing independent TX/RX channel control. The programmable Baud Rate Generator is capable of operating with a crystal frequency of up to 24 MHz. However, with an external clock input on XTAL1 pin and a 2K ohms pull-up resistor on XTAL2 pin (as shown in Figure 5) it can extend its operation up to 50 MHz (3.125 Mbps serial data rate and 16X sampling) at room temperature and 5.0V.

FIGURE 5. EXTERNAL CLOCK CONNECTION FOR EXTENDED DATA RATE

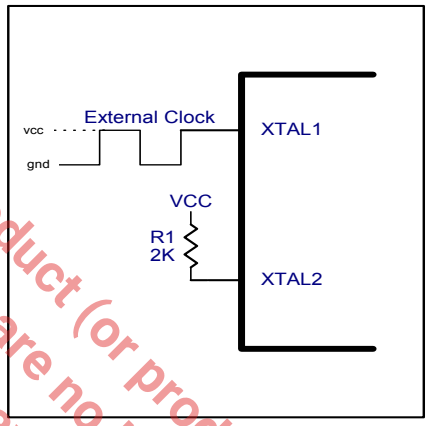

The product (or products) mentioned in this data sheet are no longer being manufactured and may not be ordered (OBS)

Each UART also has their own prescaler along with the BRG. The prescaler is controlled by CLKSEL hardware pin or a software bit in the MCR register. The MCR register bit-7 sets the prescaler to divide the input crystal or external clock by 1 or 4 and can override the CLKSEL pin following reset. The clock output of the prescaler goes to the BRG. The BRG further divides this clock by a programmable divisor between 1 and (2^{16} -1) to obtain a 16X sampling rate clock of the serial data rate. The sampling rate clock is used by the transmitter for data bit shifting and receiver for data sampling.

FIGURE 6. BAUD RATE GENERATOR AND PRESCALER

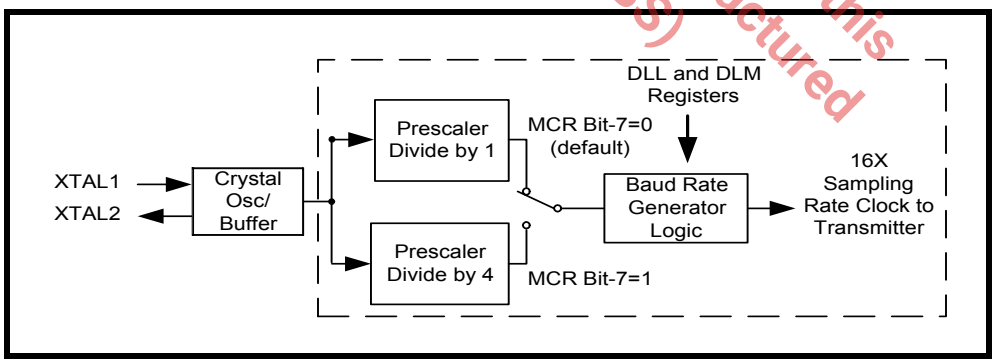

Programming the Baud Rate Generator Registers DLM and DLL provides the capability of selecting the operating data rate. Table 5 shows the standard data rates available with a 14.7456 MHz crystal or external clock at 16X sampling rate clock rate. A 16X sampling clock is typically used. However, user can select the 8X sampling clock rate mode to double the operating data rate. When using a non-standard data rate crystal or external clock, the divisor value can be calculated for DLL/DLM with the following equation.

divisor (decimal) = (XTAL1 clock frequency / prescaler) / (serial data rate x 16), with CLK8/16 pin = 1
divisor (decimal) = (XTAL1 clock frequency / prescaler) / (serial data rate x 8), with CLK8/16 pin = 0

TABLE 5: TYPICAL DATA RATES WITH A 14.7456 MHZ CRYSTAL OR EXTERNAL CLOCK

OUTPUT Data Rate MCR Bit-7=1	OUTPUT Data Rate MCR Bit-7=0 (DEFAULT)	DIVISOR FOR 16x Clock (Decimal)	DIVISOR FOR 16x Clock (HEX)	DLM PROGRAM VALUE (HEX)	DLL PROGRAM VALUE (HEX)	DATA RATE ERROR (%)
100	400	2304	900	09	00	0
600	2400	384	180	01	80	0
1200	4800	192	C0	00	C0	0
2400	9600	96	60	00	60	0
4800	19.2k	48	30	00	30	0
9600	38.4k	24	18	00	18	0
19.2k	76.8k	12	0C	00	0C	0
38.4k	153.6k	6	06	00	06	0
57.6k	230.4k	4	04	00	04	0
115.2k	460.8k	2	02	00	02	0
230.4k	921.6k	1	01	00	01	0

The product (or products) mentioned in this data sheet are no longer being manufactured and may not be ordered. (OBS)

2.10 Transmitter

The transmitter section comprises of an 8-bit Transmit Shift Register (TSR) and 128 bytes of FIFO which includes a byte-wide Transmit Holding Register (THR). TSR shifts out every data bit with the 16X/8X internal clock. A bit time is 16 (8) clock periods (see CLK8/16 pin description). The transmitter sends the start-bit followed by the number of data bits, inserts the proper parity-bit if enabled, and adds the stop-bit(s). The status of the FIFO and TSR are reported in the Line Status Register (LSR bit-5 and bit-6).

2.10.1 Transmit Holding Register (THR) - Write Only

The transmit holding register is an 8-bit register providing a data interface to the host processor. The host writes transmit data byte to the THR to be converted into a serial data stream including start-bit, data bits, parity-bit and stop-bit(s). The least-significant-bit (Bit-0) becomes first data bit to go out. The THR is the input register to the transmit FIFO of 128 bytes when FIFO operation is enabled by FCR bit-0. Every time a write operation is made to the THR, the FIFO data pointer is automatically bumped to the next sequential data location.

2.10.2 Transmitter Operation in non-FIFO Mode

The host loads transmit data to THR one character at a time. The THR empty flag (LSR bit-5) is set when the data byte is transferred to TSR. THR flag can generate a transmit empty interrupt (ISR bit-1) when it is enabled by IER bit-1. The TSR flag (LSR bit-6) is set when TSR becomes completely empty.

FIGURE 7. TRANSMITTER OPERATION IN NON-FIFO MODE

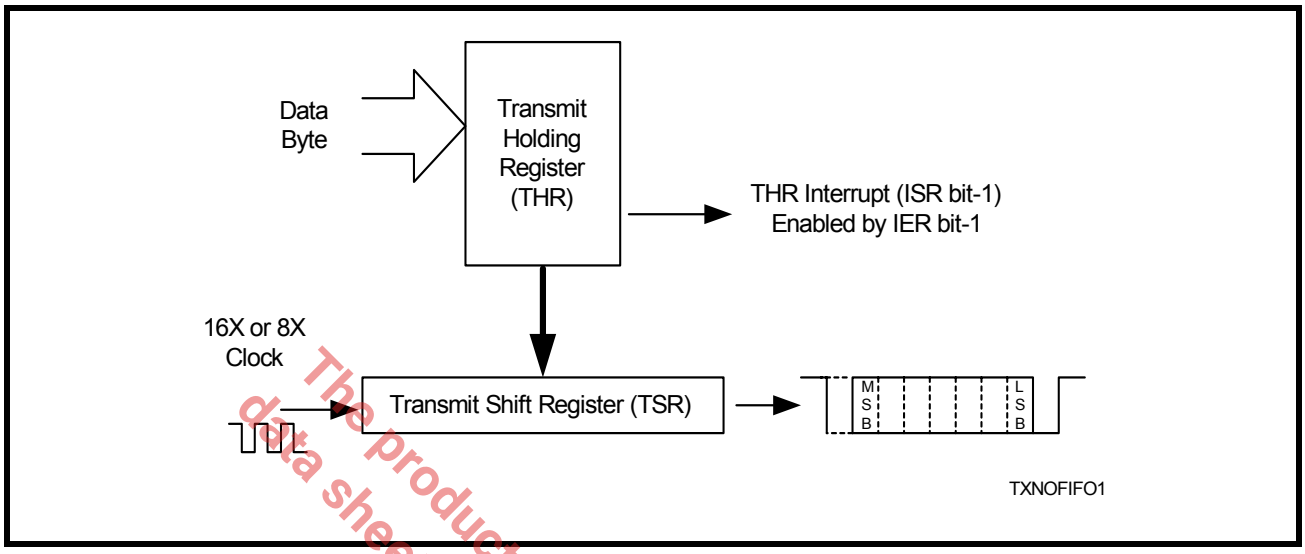

The product (or products) mentioned in this data sheet are no longer being manufactured and may not be ordered (OBS)

2.10.3 Transmitter Operation in FIFO Mode

The host may fill the transmit FIFO with up to 128 bytes of transmit data. The THR empty flag (LSR bit-5) is set whenever the FIFO is empty. The THR empty flag can generate a transmit empty interrupt (ISR bit-1) when the amount of data in the FIFO falls below its programmed trigger level. The transmit empty interrupt is enabled by IER bit-1. The TSR flag (LSR bit-6) is set when TSR/FIFO becomes empty.

FIGURE 8. TRANSMITTER OPERATION IN FIFO AND FLOW CONTROL MODE

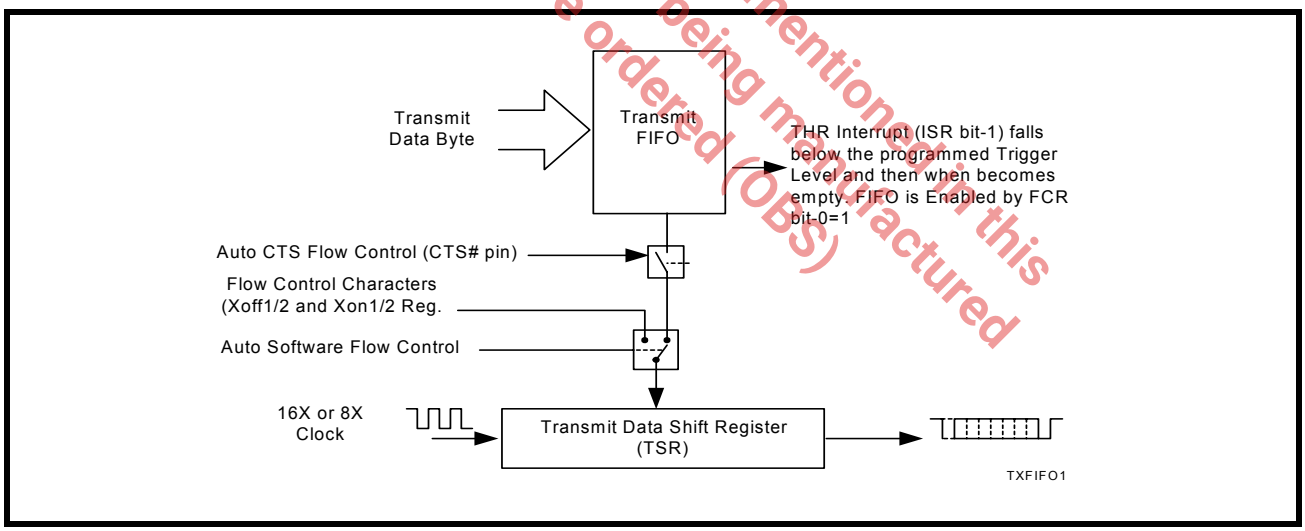

2.11 Receiver

The receiver section contains an 8-bit Receive Shift Register (RSR) and 128 bytes of FIFO which includes a byte-wide Receive Holding Register (RHR). The RSR uses the 16X/8X clock (CLK8/16 pin) for timing. It verifies and validates every bit on the incoming character in the middle of each data bit. On the falling edge of a start or false start bit, an internal receiver counter starts counting at the 16X/8X clock rate. After 8 clocks (or 4 if 8X) the start bit period should be at the center of the start bit. At this time the start bit is sampled and if it is still a logic 0 it is validated. Evaluating the start bit in this manner prevents the receiver from assembling a false character. The rest of the data bits and stop bits are sampled and validated in this same manner to prevent false framing. If there were any error(s), they are reported in the LSR register bits 2-4. Upon unloading the receive data byte from RHR, the receive FIFO pointer is bumped and the error tags are immediately updated to reflect the status of the data byte in RHR register. RHR can generate a receive data ready interrupt upon receiving a character or delay until it reaches the FIFO trigger level. Furthermore, data delivery to the host is guaranteed by a receive data ready time-out interrupt when data is not received for 4 word lengths as defined by LCR[1:0] plus 12 bits time. This is equivalent to 3.7-4.6 character times. The RHR interrupt is enabled by IER bit-0.

2.11.1 Receive Holding Register (RHR) - Read-Only

The Receive Holding Register is an 8-bit register that holds a receive data byte from the Receive Shift Register. It provides the receive data interface to the host processor. The RHR register is part of the receive FIFO of 128 bytes by 11-bits wide, the 3 extra bits are for the 3 error tags to be reported in LSR register. When the FIFO is enabled by FCR bit-0, the RHR contains the first data character received by the FIFO. After the RHR is read, the next character byte is loaded into the RHR and the errors associated with the current data byte are immediately updated in the LSR bits 2-4.

The product (or products) mentioned in this data sheet are no longer being manufactured and may not be ordered (OBS)

FIGURE 9. RECEIVER OPERATION IN NON-FIFO MODE

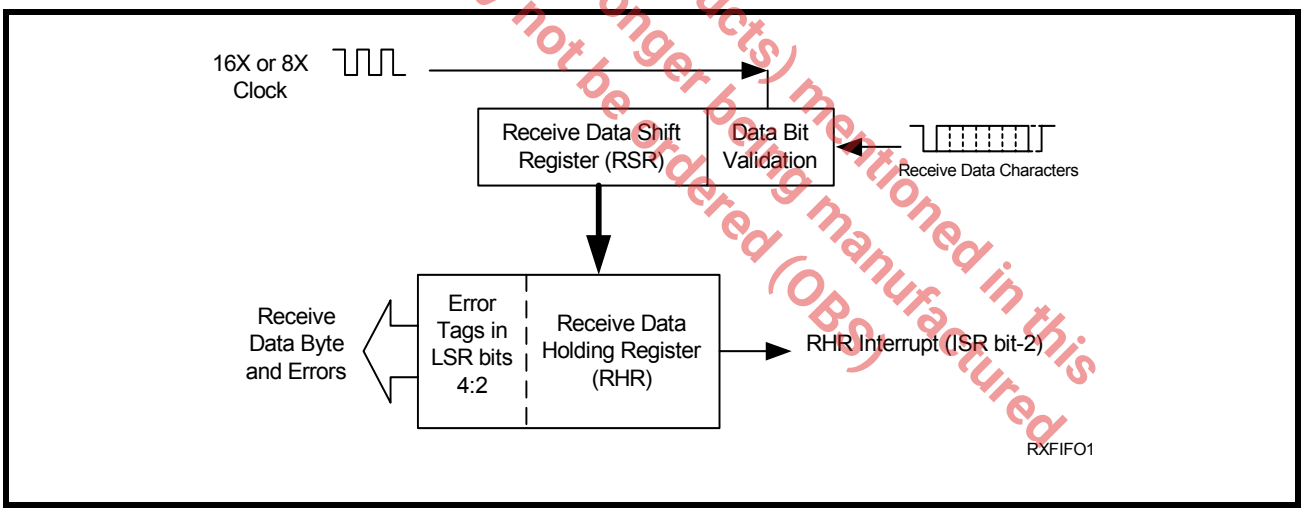

FIGURE 10. RECEIVER OPERATION IN FIFO AND AUTO RTS FLOW CONTROL MODE

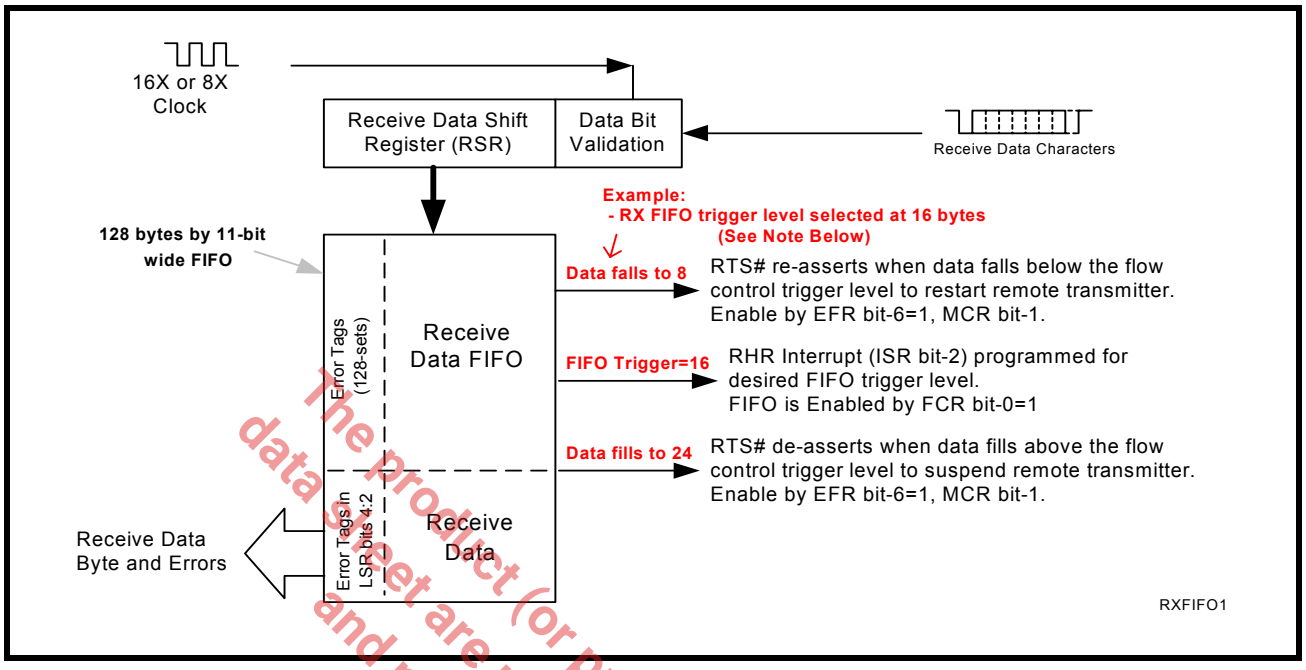

NOTE: Table-B selected as Trigger Table for Figure 10 (Table 10).

2.12 Auto RTS (Hardware) Flow Control

Automatic RTS hardware flow control is used to prevent data overrun to the local receiver FIFO. The RTS# output is used to request remote unit to suspend/resume data transmission. The auto RTS flow control features is enabled to fit specific application requirement (see Figure 11):

- Enable auto RTS flow control using EFR bit-6.
- The auto RTS function must be started by asserting RTS output pin (MCR bit-1 to logic 1 after it is enabled).

With the Auto RTS function enabled, the RTS# output pin will not be de-asserted (HIGH) when the receive FIFO reaches the programmed trigger level, but will be de-asserted when the FIFO reaches the next trigger level (See Table 10). The RTS# output pin will be asserted (LOW) again after the FIFO is unloaded to the next trigger level below the programmed trigger level. However, even under these conditions, the 2850 will continue to accept data until the receive FIFO is full if the remote UART transmitter continues to send data.

- Enable RTS interrupt through IER bit-6 (after setting EFR bit-4). The UART issues an interrupt when the RTS# pin is de-asserted (HIGH) during Auto RTS flow control mode: ISR bit-5 will be set to logic 1.

2.13 Auto RTS Hysteresis

The 2850 has a new feature that provides flow control trigger hysteresis while maintaining compatibility with the XR16C850, ST16C650A and ST16C550 family of UARTs. With the Auto RTS function enabled, an interrupt is generated when the receive FIFO reaches the programmed RX trigger level. The RTS# pin will not be forced HIGH (RTS off) until the receive FIFO reaches the upper limit of the hysteresis level. The RTS# pin will return LOW after the RX FIFO is unloaded to the lower limit of the hysteresis level. Under the above described conditions, the 2850 will continue to accept data until the receive FIFO gets full. The Auto RTS function is initiated when the RTS# output pin is asserted LOW (RTS On). Table 13 shows the complete details for the Auto RTS# Hysteresis levels. Please note that this table is for programmable trigger levels only (Table D). The hysteresis values for Tables A-C are the next higher and next lower trigger levels in the corresponding table.

The product (or products) mentioned in this data sheet are no longer being manufactured and may not be ordered. (OBS)

2.14 Auto CTS Flow Control

Automatic CTS flow control is used to prevent data overrun to the remote receiver FIFO. The CTS# input is monitored to suspend/restart the local transmitter. The auto CTS flow control feature is selected to fit specific application requirement (see Figure 11):

- Enable auto CTS flow control using EFR bit-7.

With the Auto CTS function enabled, the UART will suspend transmission as soon as the stop bit of the character in the Transmit Shift Register has been shifted out. Transmission is resumed after the CTS# input is re-asserted (LOW), indicating more data may be sent.

- Enable CTS interrupt through IER bit-7 (after setting EFR bit-4). The UART issues an interrupt when the CTS# pin is de-asserted (HIGH) during Auto CTS flow control mode: ISR bit-5 will be set to 1.

FIGURE 11. AUTO RTS AND CTS FLOW CONTROL OPERATION

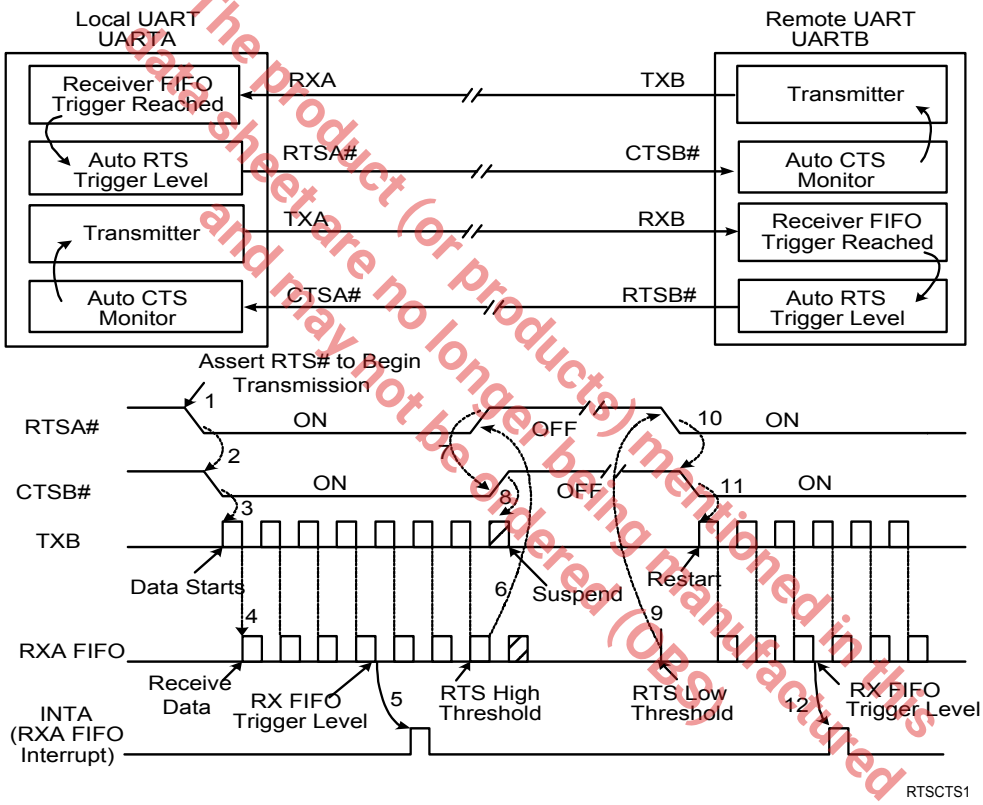

The product (or products) mentioned in this data sheet are no longer being manufactured and may not be ordered (OBS)

The local UART (UARTA) starts data transfer by asserting RTSA# (1). RTSA# is normally connected to CTSB# (2) of remote UART (UARTB). CTSB# allows its transmitter to send data (3). TXB data arrives and fills UARTA receive FIFO (4). When RXA data fills up to its receive FIFO trigger level, UARTA activates its RXA data ready interrupt (5) and continues to receive and put data into its FIFO. If interrupt service latency is long and data is not being unloaded, UARTA monitors its receive data fill level to match the upper threshold of RTS delay and de-assert RTSA# (6). CTSB# follows (7) and request UARTB transmitter to suspend data transfer. UARTB stops or finishes sending the data bits in its transmit shift register (8). When receive FIFO data in UARTA is unloaded to match the lower threshold of RTS delay (9), UARTA re-asserts RTSA# (10), CTSB# recognizes the change (11) and restarts its transmitter and data flow again until next receive FIFO trigger (12). This same event applies to the reverse direction when UARTA sends data to UARTB with RTSB# and CTSA# controlling the data flow.

2.15 Auto Xon/Xoff (Software) Flow Control

When software flow control is enabled (See Table 15), the 2850 compares one or two sequential receive data characters with the programmed Xon or Xoff-1,2 character value(s). If receive character(s) (RX) match the programmed values, the 2850 will halt transmission (TX) as soon as the current character has completed transmission. When a match occurs, the Xoff (if enabled via IER bit-5) flag will be set and the interrupt output pin will be activated. Following a suspension due to a match of the Xoff character, the 2850 will monitor the receive data stream for a match to the Xon-1,2 character. If a match is found, the 2850 will resume operation and clear the flags (ISR bit-4).

Reset initially sets the contents of the Xon/Xoff 8-bit flow control registers to a logic 0. Following reset, any desired Xon/Xoff value can be used for software flow control. Different conditions can be set to detect Xon/Xoff characters (See Table 15) and suspend/resume transmissions. When double 8-bit Xon/Xoff characters are selected, the 2850 compares two consecutive receive characters with two software flow control 8-bit values (Xon1, Xon2, Xoff1, Xoff2) and controls TX transmissions accordingly. Under the above described flow control mechanisms, flow control characters are not placed (stacked) in the user accessible RX data buffer or FIFO.

In the event that the receive buffer is overfilling and flow control needs to be executed, the 2850 automatically sends an Xoff message (when enabled) via the serial TX output to the remote modem. The 2850 sends the Xoff-1,2 characters two character times (= time taken to send two characters at the programmed baud rate) after the receive FIFO crosses the programmed trigger level (for all trigger tables A-D). To clear this condition, the 2850 will transmit the programmed Xon-1,2 characters as soon as receive FIFO is less than one trigger level below the programmed trigger level (for Trigger Tables A, B, and C) or when receive FIFO is less than the trigger level minus the hysteresis value (for Trigger Table D). This hysteresis value is the same as the Auto RTS Hysteresis value in Table 13. Table 6 below explains this when Trigger Table-B (See Table 10) is selected.

The product (or products) mentioned in this data sheet are no longer being manufactured and may not be ordered (OBS)

TABLE 6: AUTO XON/XOFF (SOFTWARE) FLOW CONTROL

RX TRIGGER LEVEL	INT PIN ACTIVATION	XOFF CHARACTER(S) SENT (CHARACTERS IN RX FIFO)	XON CHARACTER(S) SENT (CHARACTERS IN RX FIFO)
8	8	8*	0
16	16	16*	8
24	24	24*	16
28	28	28*	24

** After the trigger level is reached, an xoff character is sent after a short span of time (= time required to send 2 characters); for example, after 2.083ms has elapsed for 9600 baud and 10-bit word length setting.*

2.16 Special Character Detect

A special character detect feature is provided to detect an 8-bit character when bit-5 is set in the Enhanced Feature Register (EFR). When this character (Xoff2) is detected, it will be placed in the FIFO along with normal incoming RX data.

The 2850 compares each incoming receive character with Xoff-2 data. If a match exists, the received data will be transferred to FIFO and ISR bit-4 will be set to indicate detection of special character. Although the Internal Register Table shows Xon, Xoff Registers with eight bits of character information, the actual number of bits is dependent on the programmed word length. Line Control Register (LCR) bits 0-1 defines the number of character bits, i.e., either 5 bits, 6 bits, 7 bits, or 8 bits. The word length selected by LCR bits 0-1 also determines the number of bits that will be used for the special character comparison. Bit-0 in the Xon, Xoff Registers corresponds with the LSB bit for the receive character.

2.17 Auto RS485 Half-duplex Control

The auto RS485 half-duplex direction control changes the behavior of the transmitter when enabled by FCTR bit-3. It de-asserts RTS# output (HIGH) following the last stop bit of the last character that has been transmitted. This helps in turning around the transceiver to receive the remote station's response. When the host is ready to transmit next polling data packet again, it only has to load data bytes to the transmit FIFO. The transmitter automatically re-asserts RTS# output (LOW) prior sending the data.

2.18 Infrared Mode

The 2850 UART includes the infrared encoder and decoder compatible to the IrDA (Infrared Data Association) version 1.0. The IrDA 1.0 standard that stipulates the infrared encoder sends out a 3/16 of a bit wide HIGH-pulse for each “0” bit in the transmit data stream. This signal encoding reduces the on-time of the infrared LED, hence reduces the power consumption. See **Figure 12** below.

The infrared encoder and decoder are enabled by setting MCR register bit-6 to a ‘1’. When the infrared feature is enabled, the transmit data output, TX, idles at logic zero level. Likewise, the RX input assumes an idle level of logic zero from a reset and power up, see **Figure 12**.

Typically, the wireless infrared decoder receives the input pulse from the infrared sensing diode on the RX pin. Each time it senses a light pulse, it returns a logic 1 to the data bit stream. However, this is not true with some infrared modules on the market which indicate a logic 0 by a light pulse. So the 2850 has a provision to invert the input polarity to accomodate this. In this case user can enable FCTR bit-2 to invert the input signal.

The product (or products) mentioned in this data sheet are no longer being manufactured and may not be ordered (OBS)

FIGURE 12. INFRARED TRANSMIT DATA ENCODING AND RECEIVE DATA DECODING

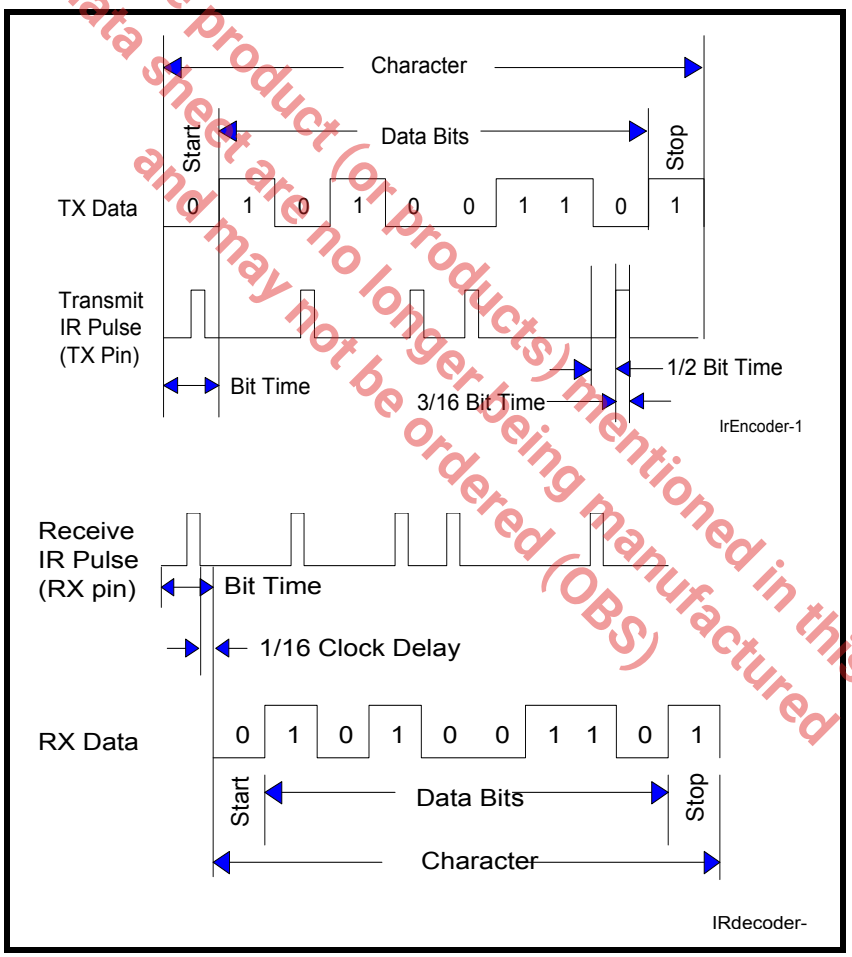

2.19 Sleep Mode with Auto Wake-Up

The 2850 supports low voltage system designs, hence, a sleep mode is included to reduce its power consumption when the chip is not actively used.

All of these conditions must be satisfied for the 2850 to enter sleep mode:

- no interrupts pending for both channels of the 2850 (ISR bit-0 = 1)
- sleep mode of both channels are enabled (IER bit-4 = 1)
- modem inputs are not toggling (MSR bits 0-3 = 0)
- RX input pin of both channels are idling at a logic 1

The 2850 stops its crystal oscillator to conserve power in the sleep mode. User can check the XTAL2 pin for no clock output as an indication that the device has entered the sleep mode.

The 2850 resumes normal operation by any of the following:

- a receive data start bit transition (HIGH to LOW)
- a data byte is loaded to the transmitter, THR or FIFO
- a change of logic state on any of the modem or general purpose serial inputs: CTS#, DSR#, CD#, RI#

If the 2850 is awakened by any one of the above conditions, it will return to the sleep mode automatically after all interrupting conditions have been serviced and cleared. If the 2850 is awakened by the modem inputs, a read to the MSR is required to reset the modem inputs. In any case, the sleep mode will not be entered while an interrupt is pending from channel A or B. The 2850 will stay in the sleep mode of operation until it is disabled by setting IER bit-4 to a logic 0.

If the address lines, data bus lines, IOW#, IOR#, CSA#, CSB#, and modem input lines remain steady when the 2850 is in sleep mode, the maximum current will be in the microamp range as specified in the DC Electrical Characteristics on page 38. If the input lines are floating or are toggling while the 2850 is in sleep mode, the current can be up to 100 times more. If any of those signals are toggling or floating, then an external buffer would be required to keep the address, data and control lines steady to achieve the low current.

A word of caution: owing to the starting up delay of the crystal oscillator after waking up from sleep mode, the first few receive characters may be lost. The number of characters lost during the restart also depends on your operating data rate. More characters are lost when operating at higher data rate. Also, it is important to keep RX A/B inputs idling HIGH or “marking” condition during sleep mode to avoid receiving a “break” condition upon the restart. This may occur when the external interface transceivers (RS-232, RS-485 or another type) are also put to sleep mode and cannot maintain the “marking” condition. To avoid this, the designer can use a 47k-100k ohm pull-up resistor on the RXA and RXB pins.

The product (or product) mentioned in this data sheet are no longer being manufactured and may not be ordered (OBS)

2.20 Internal Loopback

The 2850 UART provides an internal loopback capability for system diagnostic purposes. The internal loopback mode is enabled by setting MCR register bit-4 to logic 1. All regular UART functions operate normally. Figure 13 shows how the modem port signals are re-configured. Transmit data from the transmit shift register output is internally routed to the receive shift register input allowing the system to receive the same data that it was sending. The TX pin is held HIGH or mark condition while RTS# and DTR# are de-asserted, and CTS#, DSR# CD# and RI# inputs are ignored. Caution: the RX input must be held HIGH during loopback test else upon exiting the loopback test the UART may detect and report a false "break" signal.

FIGURE 13. INTERNAL LOOP BACK IN CHANNELS A AND B

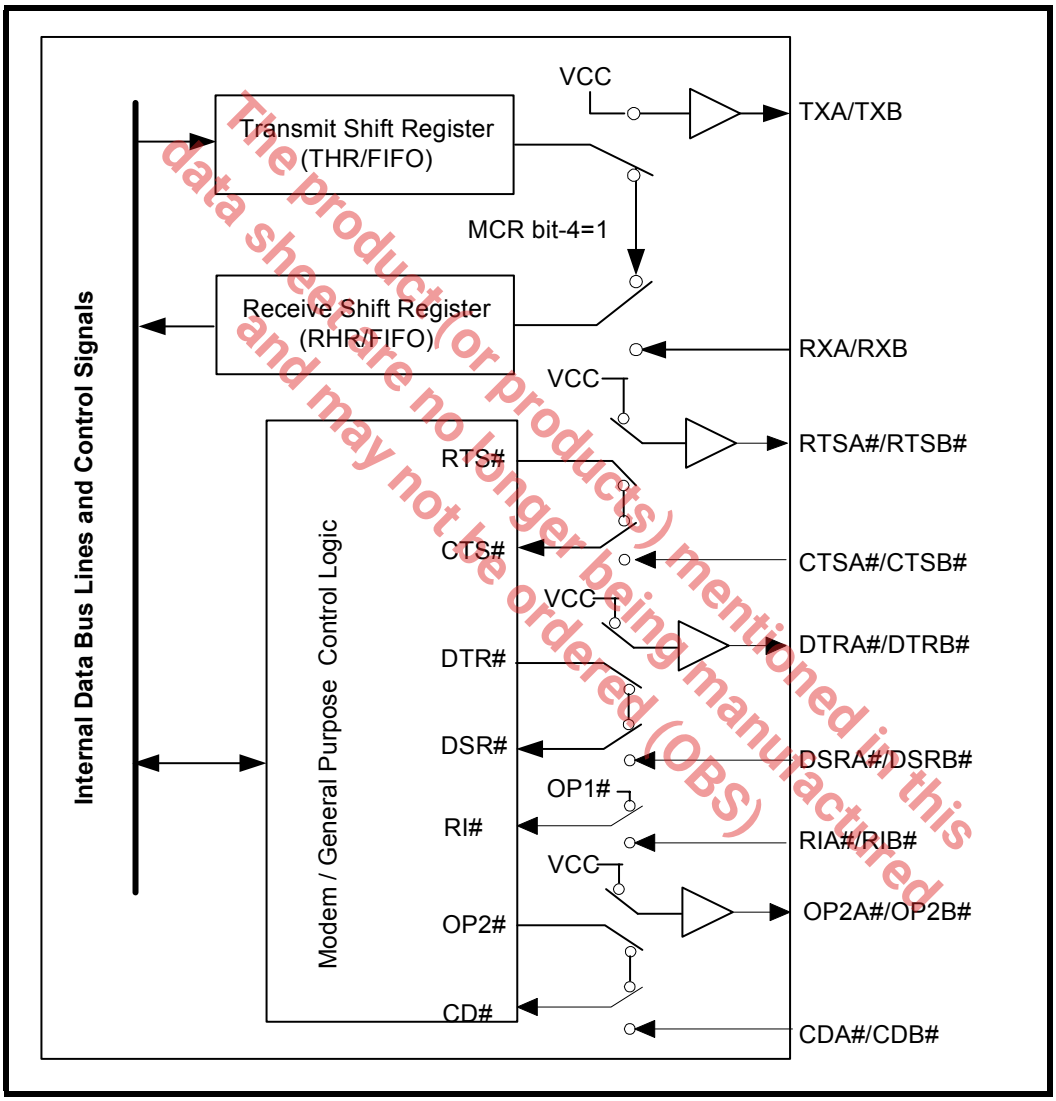

The product(or products) mentioned in this data sheet are no longer being manufactured and may not be ordered (OBS)

3.0 UART INTERNAL REGISTERS

Each of the UART channel in the 2850 has its own set of configuration registers selected by address lines A0, A1 and A2 with CSA# or CSB# selecting the channel. The complete register set is shown on Table 7 and Table 8.

.

TABLE 7: UART CHANNEL A AND B UART INTERNAL REGISTERS

A2,A1,A0 ADDRESSES	REGISTER	READ/WRITE	COMMENTS
16C550 COMPATIBLE REGISTERS			
0 0 0	RHR - Receive Holding Register THR - Transmit Holding Register	Read-only Write-only	LCR[7] = 0
0 0 0	DLL - Div Latch Low Byte	Read/Write	LCR[7] = 1, LCR ≠ 0xBF
0 0 1	DLM - Div Latch High Byte	Read/Write	
0 0 0	DREV - Device Revision Code	Read-only	DLL, DLM = 0x00, LCR[7] = 1, LCR ≠ 0xBF
0 0 1	DVID - Device Identification Code	Read-only	
0 0 1	IER - Interrupt Enable Register	Read/Write	LCR[7] = 0
0 1 0	ISR - Interrupt Status Register FCR - FIFO Control Register	Read-only Write-only	
0 1 1	LCR - Line Control Register	Read/Write	
1 0 0	MCR - Modem Control Register	Read/Write	LCR[7] = 0
1 0 1	LSR - Line Status Register Reserved	Read-only Write-only	
1 1 0	MSR - Modem Status Register Reserved	Read-only Write-only	
1 1 1	SPR - Scratch Pad Register	Read/Write	LCR[7] = 0, FCTR[6] = 0
1 1 1	FLVL - TX/RX FIFO Level Counter Register	Read-only	LCR[7] = 0, FCTR[6] = 1
1 1 1	EMSR - Enhanced Mode Select Register	Write-only	
ENHANCED REGISTERS			
0 0 0	TRG - TX/RX FIFO Trigger Level Reg FC - TX/RX FIFO Level Counter Register	Write-only Read-only	LCR = 0xBF
0 0 1	FCTR - Feature Control Reg	Read/Write	
0 1 0	EFR - Enhanced Function Reg	Read/Write	
1 0 0	Xon-1 - Xon Character 1	Read/Write	
1 0 1	Xon-2 - Xon Character 2	Read/Write	
1 1 0	Xoff-1 - Xoff Character 1	Read/Write	
1 1 1	Xoff-2 - Xoff Character 2	Read/Write	

The product (or products) mentioned in this data sheet are no longer being manufactured and may not be ordered (OBS)

TABLE 8: INTERNAL REGISTERS DESCRIPTION. SHADED BITS ARE ENABLED WHEN EFR BIT-4=1

ADDRESS A2-A0	REG NAME	READ/ WRITE	BIT-7	BIT-6	BIT-5	BIT-4	BIT-3	BIT-2	BIT-1	BIT-0	COMMENT
16C550 Compatible Registers											
0 0 0	RHR	RD	Bit-7	Bit-6	Bit-5	Bit-4	Bit-3	Bit-2	Bit-1	Bit-0	
0 0 0	THR	WR	Bit-7	Bit-6	Bit-5	Bit-4	Bit-3	Bit-2	Bit-1	Bit-0	
0 0 1	IER	RD/WR	0/ CTS# Int. Enable	0/ RTS# Int. Enable	0/ Xoff Int.. Enable	0/ Sleep Mode Enable	Modem Status Int. Enable	RX Line Status- Int. Enable	TX Empty Int. Enable	RX Data Int. Enable	
0 1 0	ISR	RD	FIFOs Enabled	FIFOs Enabled	0/ INT Source Bit-5	0/ INT Source Bit-4	INT Source Bit-3	INT Source Bit-2	INT Source Bit-1	INT Source Bit-0	LCR[7] = 0
0 1 0	FCR	WR	RXFIFO Trigger	RXFIFO Trigger	0/ TXFIFO Trigger	0/ TXFIFO Trigger	DMA Mode Enable	TX FIFO Reset	RX FIFO Reset	FIFOs Enable	
0 1 1	LCR	RD/WR	Divisor Enable	Set TX Break	Set Parity	Even Parity	Parity Enable	Stop Bits	Word Length Bit-1	Word Length Bit-0	
1 0 0	MCR	RD/WR	0/ BRG Pres- caler	0/ IR Mode ENable	0/ XonAny	Internal Lopback Enable	OP2#/INT Output Enable	Rsvd (OP1#)	RTS# Output Control	DTR# Output Control	
1 0 1	LSR	RD	RX FIFO Global Error	THR & TSR Empty	THR Empty	RX Break	RX Fram- ing Error	RX Parity Error	RX Over- run Error	RX Data Ready	LCR[7] = 0
1 1 0	MSR	RD	CD# Input	RI# Input	DSR# Input	CTS# Input	Delta CD#	Delta RI#	Delta DSR#	Delta CTS#	
1 1 1	SPR	RD/WR	Bit-7	Bit-6	Bit-5	Bit-4	Bit-3	Bit-2	Bit-1	Bit-0	LCR[7] = 0 FCTR[6]=0
1 1 1	EMSR	WR	Rsvd	Rsvd	Auto RTS Hyst. bit-3	Auto RTS Hyst. bit-2	Rsvd	Rsvd	Rx/Tx FIFO Count	Rx/Tx FIFO Count	LCR[7] = 0 FCTR[6]=1
1 1 1	FLVL	RD	Bit-7	Bit-6	Bit-5	Bit-4	Bit-3	Bit-2	Bit-1	Bit-0	
Baud Rate Generator Divisor											
0 0 0	DLL	RD/WR	Bit-7	Bit-6	Bit-5	Bit-4	Bit-3	Bit-2	Bit-1	Bit-0	LCR[7] = 1 LCR ≠ 0xBF
0 0 1	DLM	RD/WR	Bit-7	Bit-6	Bit-5	Bit-4	Bit-3	Bit-2	Bit-1	Bit-0	

The product(s) mentioned in this data sheet are no longer being manufactured and may not be ordered (OBS)

TABLE 8: INTERNAL REGISTERS DESCRIPTION. SHADED BITS ARE ENABLED WHEN EFR BIT-4=1

ADDRESS A2-A0	REG NAME	READ/ WRITE	BIT-7	BIT-6	BIT-5	BIT-4	BIT-3	BIT-2	BIT-1	BIT-0	COMMENT
0 0 0	DREV	RD	Bit-7	Bit-6	Bit-5	Bit-4	Bit-3	Bit-2	Bit-1	Bit-0	LCR[7] = 1 LCR≠0xBF DLL=0x00 DLM=0x00
0 0 1	DVID	RD	0	0	0	1	0	0	1	0	
Enhanced Registers											
0 0 0	TRG	WR	Bit-7	Bit-6	Bit-5	Bit-4	Bit-3	Bit-2	Bit-1	Bit-0	LCR=0xBF
0 0 0	FC	RD	Bit-7	Bit-6	Bit-5	Bit-4	Bit-3	Bit-2	Bit-1	Bit-0	
0 0 1	FCTR	RD/WR	RX/TX Mode	SCPAD Swap	Trig Table Bit-1	Trig Table Bit-0	Auto RS485 Direction Control	RX IR Input Inv.	Auto RTS Hyst Bit-1	Auto RTS Hyst Bit-0	
0 1 0	EFR	RD/WR	Auto CTS Enable	Auto RTS Enable	Special Char Select	Enable IER [7:4], ISR [5:4], FCR[5:4], MCR[7:5]	Soft-ware Flow Cntl Bit-3	Soft-ware Flow Cntl Bit-2	Soft-ware Flow Cntl Bit-1	Soft-ware Flow Cntl Bit-0	
1 0 0	XON1	RD/WR	Bit-7	Bit-6	Bit-5	Bit-4	Bit-3	Bit-2	Bit-1	Bit-0	
1 0 1	XON2	RD/WR	Bit-7	Bit-6	Bit-5	Bit-4	Bit-3	Bit-2	Bit-1	Bit-0	
1 1 0	XOFF1	RD/WR	Bit-7	Bit-6	Bit-5	Bit-4	Bit-3	Bit-2	Bit-1	Bit-0	
1 1 1	XOFF2	RD/WR	Bit-7	Bit-6	Bit-5	Bit-4	Bit-3	Bit-2	Bit-1	Bit-0	

The product (or products) mentioned in this data sheet are no longer being manufactured and may not be ordered (OBS)

4.0 INTERNAL REGISTER DESCRIPTIONS

4.1 Receive Holding Register (RHR) - Read- Only

SEE"RECEIVER" ON PAGE 14.

4.2 Transmit Holding Register (THR) - Write-Only

SEE"TRANSMITTER" ON PAGE 12.

4.3 Interrupt Enable Register (IER) - Read/Write

The Interrupt Enable Register (IER) masks the interrupts from receive data ready, transmit empty, line status and modem status registers. These interrupts are reported in the Interrupt Status Register (ISR).

4.3.1 IER versus Receive FIFO Interrupt Mode Operation

When the receive FIFO (FCR BIT-0 = 1) and receive interrupts (IER BIT-0 = 1) are enabled, the RHR interrupts (see ISR bits 2 and 3) status will reflect the following:

A. The receive data available interrupts are issued to the host when the FIFO has reached the programmed trigger level. It will be cleared when the FIFO drops below the programmed trigger level.

B. FIFO level will be reflected in the ISR register when the FIFO trigger level is reached. Both the ISR register status bit and the interrupt will be cleared when the FIFO drops below the trigger level.

C. The receive data ready bit (LSR BIT-0) is set as soon as a character is transferred from the shift register to the receive FIFO. It is reset when the FIFO is empty.

4.3.2 IER versus Receive/Transmit FIFO Polled Mode Operation

When FCR BIT-0 equals a logic 1 for FIFO enable; resetting IER bits 0-3 enables the XR16C2850 in the FIFO polled mode of operation. Since the receiver and transmitter have separate bits in the LSR either or both can be used in the polled mode by selecting respective transmit or receive control bit(s).

A. LSR BIT-0 indicates there is data in RHR or RX FIFO.

B. LSR BIT-1 indicates an overrun error has occurred and that data in the FIFO may not be valid.

C. LSR BIT 2-4 provides the type of receive data errors encountered for the data byte in RHR, if any.

D. LSR BIT-5 indicates THR is empty.

E. LSR BIT-6 indicates when both the transmit FIFO and TSR are empty.

F. LSR BIT-7 indicates a data error in at least one character in the RX FIFO.

IER[0]: RHR Interrupt Enable

The receive data ready interrupt will be issued when RHR has a data character in the non-FIFO mode or when the receive FIFO has reached the programmed trigger level in the FIFO mode.

- Logic 0 = Disable the receive data ready interrupt (default).
- Logic 1 = Enable the receiver data ready interrupt.

IER[1]: THR Interrupt Enable

This bit enables the Transmit Ready interrupt which is issued whenever the THR becomes empty in the non-FIFO mode or when data in the FIFO falls below the programmed trigger level in the FIFO mode. If the THR is empty when this bit is enabled, an interrupt will be generated.

- Logic 0 = Disable Transmit Ready interrupt (default).
- Logic 1 = Enable Transmit Ready interrupt.

IER[2]: Receive Line Status Interrupt Enable

If any of the LSR register bits 1, 2, 3 or 4 is a logic 1, it will generate an interrupt to inform the host controller about the error status of the current data byte in FIFO. LSR bits 1-4 generate an interrupt immediately when the character has been received.

- Logic 0 = Disable the receiver line status interrupt (default).
- Logic 1 = Enable the receiver line status interrupt.

IER[3]: Modem Status Interrupt Enable

- Logic 0 = Disable the modem status register interrupt (default).
- Logic 1 = Enable the modem status register interrupt.

IER[4]: Sleep Mode Enable (requires EFR bit-4 = 1)

- Logic 0 = Disable Sleep Mode (default).
- Logic 1 = Enable Sleep Mode. See Sleep Mode section for complete details.

IER[5]: Xoff Interrupt Enable (requires EFR bit-4=1)

- Logic 0 = Disable the software flow control, receive Xoff interrupt (default).
- Logic 1 = Enable the software flow control, receive Xoff interrupt. See Software Flow Control section for details.

IER[6]: RTS# Output Interrupt Enable (requires EFR bit-4=1)

- Logic 0 = Disable the RTS# interrupt (default).
- Logic 1 = Enable the RTS# interrupt. The UART issues an interrupt when the RTS# pin makes a transition from LOW to HIGH.

The product (or products) mentioned in this data sheet are no longer being manufactured and may not be ordered (OBS)

IER[7]: CTS# Input Interrupt Enable (requires EFR bit-4=1)

- Logic 0 = Disable the CTS# interrupt (default).
- Logic 1 = Enable the CTS# interrupt. The UART issues an interrupt when CTS# pin makes a transition from LOW to HIGH.

4.4 Interrupt Status Register (ISR) - Read-Only

The UART provides multiple levels of prioritized interrupts to minimize external software interaction. The Interrupt Status Register (ISR) provides the user with six interrupt status bits. Performing a read cycle on the ISR will give the user the current highest pending interrupt level to be serviced, others are queued up to be serviced next. No other interrupts are acknowledged until the pending interrupt is serviced. The Interrupt Source Table, Table 9, shows the data values (bit 0-5) for the interrupt priority levels and the interrupt sources associated with each of these interrupt levels.

4.4.1 Interrupt Generation:

- LSR is by any of the LSR bits 1, 2, 3 and 4.
- RXRDY is by RX trigger level.
- RXRDY Time-out is by a 4-char plus 12 bits delay timer.
- TXRDY is by TX trigger level or TX FIFO empty (or transmitter empty in auto RS-485 control).
- MSR is by any of the MSR bits 0, 1, 2 and 3.
- Receive Xoff/Special character is by detection of a Xoff or Special character.
- CTS# is when its transmitter toggles the input pin (from LOW to HIGH) during auto CTS flow control enabled by EFR bit-7.
- RTS# is when its receiver toggles the output pin (from LOW to HIGH) during auto RTS flow control enabled by EFR bit-6.

4.4.2 Interrupt Clearing:

- LSR interrupt is cleared by a read to the LSR register.
- RXRDY interrupt is cleared by reading data until FIFO falls below the trigger level.
- RXRDY Time-out interrupt is cleared by reading RHR.
- TXRDY interrupt is cleared by a read to the ISR register or writing to THR.
- MSR interrupt is cleared by a read to the MSR register.
- Xoff interrupt is cleared by a read to ISR or when Xon character(s) is received.
- Special character interrupt is cleared by a read to ISR or after the next character is received.
- RTS# and CTS# flow control interrupts are cleared by a read to the MSR register.

The product (or products) mentioned in this data sheet are no longer being manufactured and may not be ordered (OBS)

TABLE 9: INTERRUPT SOURCE AND PRIORITY LEVEL

PRIORITY LEVEL	ISR REGISTER STATUS BITS						SOURCE OF INTERRUPT
	BIT-5	BIT-4	BIT-3	BIT-2	BIT-1	BIT-0	
1	0	0	0	1	1	0	LSR (Receiver Line Status Register)
2	0	0	1	1	0	0	RXRDY (Receive Data Time-out)
3	0	0	0	1	0	0	RXRDY (Received Data Ready)
4	0	0	0	0	1	0	TXRDY (Transmit Ready)
5	0	0	0	0	0	0	MSR (Modem Status Register)
6	0	1	0	0	0	0	RXRDY (Received Xoff or Special character)

TABLE 9: INTERRUPT SOURCE AND PRIORITY LEVEL

PRIORITY LEVEL	ISR REGISTER STATUS BITS						SOURCE OF INTERRUPT
	BIT-5	BIT-4	BIT-3	BIT-2	BIT-1	BIT-0	
7	1	0	0	0	0	0	CTS#, RTS# change of state
-	0	0	0	0	0	1	None (default)

ISR[0]: Interrupt Status

- Logic 0 = An interrupt is pending and the ISR contents may be used as a pointer to the appropriate interrupt service routine.
- Logic 1 = No interrupt pending (default condition).

ISR[5:1]: Interrupt Status

These bits indicate the source for a pending interrupt at interrupt priority levels (See Table 9). See "Section 4.4.1, Interrupt Generation:" on page 25 and "Section 4.4.2, Interrupt Clearing:" on page 25 for details.

ISR[7:6]: FIFO Enable Status

These bits are set to a logic 0 when the FIFOs are disabled. They are set to a logic 1 when the FIFOs are enabled.

4.5 FIFO Control Register (FCR) - Write-Only

This register is used to enable the FIFOs, clear the FIFOs, set the transmit/receive FIFO trigger levels, and select the DMA mode. The DMA, and FIFO modes are defined as follows:

FCR[0]: TX and RX FIFO Enable

- Logic 0 = Disable the transmit and receive FIFO (default).
- Logic 1 = Enable the transmit and receive FIFOs. This bit must be set to logic 1 when other FCR bits are written or they will not be programmed.

FCR[1]: RX FIFO Reset

This bit is only active when FCR bit-0 is a '1'.

- Logic 0 = No receive FIFO reset (default).
- Logic 1 = Reset the receive FIFO pointers and FIFO level counter logic (the receive shift register is not cleared or altered). This bit will return to a logic 0 after resetting the FIFO.

FCR[2]: TX FIFO Reset

This bit is only active when FCR bit-0 is a '1'.

- Logic 0 = No transmit FIFO reset (default).
- Logic 1 = Reset the transmit FIFO pointers and FIFO level counter logic (the transmit shift register is not cleared or altered). This bit will return to a logic 0 after resetting the FIFO.

The product (or products) mentioned in this data sheet are no longer being manufactured and may not be ordered (OBS)

FCR[3]: DMA Mode Select

Controls the behavior of the TXRDY# and RXRDY# pins. See DMA operation section for details.

- Logic 0 = Normal Operation (default).
- Logic 1 = DMA Mode.

FCR[5:4]: Transmit FIFO Trigger Select

(logic 0 = default, TX trigger level = 1)

These 2 bits set the trigger level for the transmit FIFO. The UART will issue a transmit interrupt when the number of characters in the FIFO falls below the selected trigger level, or when it gets empty in case that the FIFO did not get filled over the trigger level on last re-load. Table 10 below shows the selections. EFR bit-4 must be set to '1' before these bits can be accessed. Note that the receiver and the transmitter cannot use different trigger tables. Whichever selection is made last applies to both the RX and TX side.

FCR[7:6]: Receive FIFO Trigger Select

(logic 0 = default, RX trigger level =1)

The FCTR Bits 5-4 are associated with these 2 bits. These 2 bits are used to set the trigger level for the receive FIFO. The UART will issue a receive interrupt when the number of the characters in the FIFO crosses the trigger level. Table 10 shows the complete selections. Note that the receiver and the transmitter cannot use different trigger tables. Whichever selection is made last applies to both the RX and TX side.

The product (s) mentioned in this data sheet are no longer being manufactured and may not be ordered (OBS)

TABLE 10: TRANSMIT AND RECEIVE FIFO TRIGGER TABLE AND LEVEL SELECTION

TRIGGER TABLE	FCTR BIT-5	FCTR BIT-4	FCR BIT-7	FCR BIT-6	FCR BIT-5	FCR BIT-4	RECEIVE TRIGGER LEVEL	TRANSMIT TRIGGER LEVEL	COMPATIBILITY
Table-A	0	0			0	0		1 (default)	16C550, 16C2550, 16C2552, 16C554, 16C580
			0	0			1 (default)		
			0	1			4		
			1	0			8		
			1	1			14		
Table-B	0	1			0	0		16	16C650A
					0	1		8	
					1	0		24	
					1	1		30	
			0	0			8		
			0	1			16		
			1	0			24		
			1	1			28		
Table-C	1	0			0	0		8	16C654
					0	1		16	
					1	0		32	
					1	1		56	
			0	0			8		
			0	1			16		
			1	0			56		
			1	1			60		
Table-D	1	1	X	X	X	X	Programmable via TRG register. FCTR[7] = 0.	Programmable via TRG register. FCTR[7] = 1.	16L2752, 16L2750, 16C2852, 16C850, 16C854, 16C864

4.6 Line Control Register (LCR) - Read/Write

The Line Control Register is used to specify the asynchronous data communication format. The word or character length, the number of stop bits, and the parity are selected by writing the appropriate bits in this register.

LCR[1:0]: TX and RX Word Length Select

These two bits specify the word length to be transmitted or received.

BIT-1	BIT-0	WORD LENGTH
0	0	5 (default)
0	1	6
1	0	7
1	1	8

The product(s) mentioned in this data sheet are no longer being manufactured and may not be ordered (OBS)

LCR[2]: TX and RX Stop-bit Length Select

The length of stop bit is specified by this bit in conjunction with the programmed word length.

BIT-2	WORD LENGTH	STOP BIT LENGTH (BIT TIME(S))
0	5,6,7,8	1 (default)
1	5	1-1/2
1	6,7,8	2

LCR[3]: TX and RX Parity Select

Parity or no parity can be selected via this bit. The parity bit is a simple way used in communications for data integrity check. See **Table 11** for parity selection summary below.

- Logic 0 = No parity.
- Logic 1 = A parity bit is generated during the transmission while the receiver checks for parity error of the data character received.

LCR[4]: TX and RX Parity Select

If the parity bit is enabled with LCR bit-3 set to a logic 1, LCR BIT-4 selects the even or odd parity format.

- Logic 0 = ODD Parity is generated by forcing an odd number of logic 1's in the transmitted character. The receiver must be programmed to check the same format (default).
- Logic 1 = EVEN Parity is generated by forcing an even number of logic 1's in the transmitted character. The receiver must be programmed to check the same format.

LCR[5]: TX and RX Parity Select

If the parity bit is enabled, LCR BIT-5 selects the forced parity format.

- LCR BIT-5 = logic 0, parity is not forced (default).
- LCR BIT-5 = logic 1 and LCR BIT-4 = logic 0, parity bit is forced to a logical 1 for the transmit and receive data.
- LCR BIT-5 = logic 1 and LCR BIT-4 = logic 1, parity bit is forced to a logical 0 for the transmit and receive data.

TABLE 11: PARITY SELECTION

LCR BIT-5	LCR BIT-4	LCR BIT-3	PARITY SELECTION
X	X	0	No parity
0	0	1	Odd parity
0	1	1	Even parity
1	0	1	Force parity to mark, “1”
1	1	1	Forced parity to space, “0”

The product (or products) mentioned in this data sheet are no longer being manufactured and may not be ordered (OBS)

LCR[6]: Transmit Break Enable

When enabled, the Break control bit causes a break condition to be transmitted (the TX output is forced to a “space’, LOW, state). This condition remains, until disabled by setting LCR bit-6 to a logic 0.

- Logic 0 = No TX break condition (default).
- Logic 1 = Forces the transmitter output (TX) to a “space”, LOW, for alerting the remote receiver of a line break condition.

LCR[7]: Baud Rate Divisors Enable

Baud rate generator divisor (DLL/DLM) enable.

- Logic 0 = Data registers are selected (default).
- Logic 1 = Divisor latch registers are selected.

4.7 Modem Control Register (MCR) or General Purpose Outputs Control - Read/Write

The MCR register is used for controlling the serial/modem interface signals or general purpose inputs/outputs.

MCR[0]: DTR# Output

The DTR# pin is a modem control output. If the modem interface is not used, this output may be used as a general purpose output.

- Logic 0 = Force DTR# output HIGH (default).
- Logic 1 = Force DTR# output LOW.

MCR[1]: RTS# Output

The RTS# pin is a modem control output and may be used for automatic hardware flow control enabled by EFR bit-6. The RTS# output must be asserted before the auto RTS can take effect. If the modem interface is not used, this output may be used as a general purpose output.

- Logic 0 = Force RTS# output HIGH (default).
- Logic 1 = Force RTS# output LOW. If auto RTS flow control is enabled, it will take effect after this bit has been set.

MCR[2]: Reserved

OP1# is not available as an output pin on the 2850. But it is available for use during Internal Loopback Mode. In the Loopback Mode, this bit is used to write the state of the modem RI# interface signal.

MCR[3]: OP2# Output / INT Output Enable

This bit enables and disables the operation of INT, interrupt output. If INT output is not used, OP2# can be used as a general purpose output.

- Logic 0 = INT (A-B) outputs disabled (three state mode) and OP2# output is HIGH (default).
- Logic 1 = INT (A-B) outputs enabled (active mode) and OP2# output is LOW.

MCR[4]: Internal Loopback Enable

- Logic 0 = Disable loopback mode (default).
- Logic 1 = Enable local loopback mode, see loopback section and **Figure 13**.

MCR[5]: Xon-Any Enable

- Logic 0 = Disable Xon-Any function (for 16C550 compatibility, default).
- Logic 1 = Enable Xon-Any function. In this mode, any RX character received will resume transmit operation. The RX character will be loaded into the RX FIFO , unless the RX character is an Xon or Xoff character and the 2850 is programmed to use the Xon/Xoff flow control.

MCR[6]: Infrared Encoder/Decoder Enable

- Logic 0 = Enable the standard modem receive and transmit input/output interface (default).
- Logic 1 = Enable infrared IrDA receive and transmit inputs/outputs. The TX/RX output/input are routed to the infrared encoder/decoder. The data input and output levels conform to the IrDA infrared interface requirement. While in this mode, the infrared TX output will be LOW during idle data conditions.

MCR[7]: Clock Prescaler Select

- Logic 0 = Divide by one. The input clock from the crystal or external clock is fed directly to the Programmable Baud Rate Generator without further modification, i.e., divide by one (default).
- Logic 1 = Divide by four. The prescaler divides the input clock from the crystal or external clock by four and feeds it to the Programmable Baud Rate Generator, hence, data rates become one forth.

4.8 Line Status Register (LSR) - Read Only

This register provides the status of data transfers between the UART and the host. If IER bit-2 is set to a logic 1, an LSR interrupt will be generated immediately when any character in the RX FIFO has an error (parity, framing, overrun, break).

LSR[0]: Receive Data Ready Indicator

- Logic 0 = No data in receive holding register or FIFO (default).
- Logic 1 = Data has been received and is saved in the receive holding register or FIFO.

LSR[1]: Receiver Overrun Error Flag

- Logic 0 = No overrun error (default).
- Logic 1 = Overrun error. A data overrun error condition occurred in the receive shift register. This happens when additional data arrives while the FIFO is full. In this case the previous data in the receive shift register is overwritten. Note that under this condition the data byte in the receive shift register is not transferred into the FIFO, therefore the data in the FIFO is not corrupted by the error. If IER bit-2 is set, an interrupt will be generated immediately.

LSR[2]: Receive Data Parity Error Tag

- Logic 0 = No parity error (default).
- Logic 1 = Parity error. The receive character in RHR does not have correct parity information and is suspect. This error is associated with the character available for reading in RHR.

The Product (or products) mentioned in this data sheet are no longer being manufactured and may not be ordered (OBS)

LSR[3]: Receive Data Framing Error Tag

- Logic 0 = No framing error (default).
- Logic 1 = Framing error. The receive character did not have a valid stop bit(s). This error is associated with the character available for reading in RHR.

LSR[4]: Receive Break Error Tag

- Logic 0 = No break condition (default).
- Logic 1 = The receiver received a break signal (RX was a logic 0 for at least one character frame time). In the FIFO mode, only one break character is loaded into the FIFO. The break indication remains until the RX input returns to the idle condition, “mark” or HIGH.

LSR[5]: Transmit Holding Register Empty Flag

This bit is the Transmit Holding Register Empty indicator. The THR bit is set to a logic 1 when the last data byte is transferred from the transmit holding register to the transmit shift register. The bit is reset to logic 0 concurrently with the data loading to the transmit holding register by the host. In the FIFO mode this bit is set when the transmit FIFO is empty, it is cleared when the transmit FIFO contains at least 1 byte.

LSR[6]: THR and TSR Empty Flag

This bit is set to a logic 1 whenever the transmitter goes idle. It is set to logic 0 whenever either the THR or TSR contains a data character. In the FIFO mode this bit is set to a logic 1 whenever the transmit FIFO and transmit shift register are both empty.

LSR[7]: Receive FIFO Data Error Flag

- Logic 0 = No FIFO error (default).
- Logic 1 = A global indicator for the sum of all error bits in the RX FIFO. At least one parity error, framing error or break indication is in the FIFO data. This bit clears when there is no more error(s) in any of the bytes in the RX FIFO.

4.9 Modem Status Register (MSR) - Read Only

This register provides the current state of the modem interface input signals. Lower four bits of this register are used to indicate the changed information. These bits are set to a logic 1 whenever a signal from the modem changes state. These bits may be used for general purpose inputs when they are not used with modem signals.

MSR[0]: Delta CTS# Input Flag

- Logic 0 = No change on CTS# input (default).
- Logic 1 = The CTS# input has changed state since the last time it was monitored. A modem status interrupt will be generated if MSR interrupt is enabled (IER bit-3).

MSR[1]: Delta DSR# Input Flag

- Logic 0 = No change on DSR# input (default).
- Logic 1 = The DSR# input has changed state since the last time it was monitored. A modem status interrupt will be generated if MSR interrupt is enabled (IER bit-3).

MSR[2]: Delta RI# Input Flag

- Logic 0 = No change on RI# input (default).
- Logic 1 = The RI# input has changed from a logic 0 to a logic 1, ending of the ringing signal. A modem status interrupt will be generated if MSR interrupt is enabled (IER bit-3).

MSR[3]: Delta CD# Input Flag

- Logic 0 = No change on CD# input (default).
- Logic 1 = Indicates that the CD# input has changed state since the last time it was monitored. A modem status interrupt will be generated if MSR interrupt is enabled (IER bit-3).

The product (or products) mentioned in this data sheet are no longer being manufactured and may not be ordered (OBS)

MSR[4]: CTS Input Status

CTS# pin may function as automatic hardware flow control signal input if it is enabled and selected by Auto CTS (EFR bit-7). Auto CTS flow control allows starting and stopping of local data transmissions based on the modem CTS# signal. A HIGH on the CTS# pin will stop UART transmitter as soon as the current character has finished transmission, and a LOW will resume data transmission. Normally MSR bit-4 bit is the complement of the CTS# input. However in the loopback mode, this bit is equivalent to the RTS# bit in the MCR register. The CTS# input may be used as a general purpose input when the modem interface is not used.

MSR[5]: DSR Input Status

Normally this bit is the complement of the DSR# input. In the loopback mode, this bit is equivalent to the DTR# bit in the MCR register. The DSR# input may be used as a general purpose input when the modem interface is not used.

MSR[6]: RI Input Status

Normally this bit is the complement of the RI# input. In the loopback mode this bit is equivalent to bit-2 in the MCR register. The RI# input may be used as a general purpose input when the modem interface is not used.

MSR[7]: CD Input Status

Normally this bit is the complement of the CD# input. In the loopback mode this bit is equivalent to bit-3 in the MCR register. The CD# input may be used as a general purpose input when the modem interface is not used.

4.10 Scratch Pad Register (SPR) - Read/Write

This is a 8-bit general purpose register for the user to store temporary data. The content of this register is preserved during sleep mode but becomes 0xFF (default) after a reset or a power off-on cycle.

4.11 Enhanced Mode Select Register (EMSR)

This register replaces SPR (during a Write) and is accessible only when FCTR[6] = 1.

EMSR[1:0]: Receive/Transmit FIFO Count (Write-Only)

When Scratchpad Swap (FCTR[6]) is asserted, EMSR bits 1-0 controls what mode the FIFO Level Counter is operating in.

TABLE 12: SCRATCHPAD SWAP SELECTION

FCTR[6]	EMSR[1]	EMSR[0]	Scratchpad is
0	X	X	Scratchpad
1	0	0	RX FIFO Counter Mode
1	0	1	TX FIFO Counter Mode
1	1	0	RX FIFO Counter Mode
1	1	1	Alternate RX/TX FIFO Counter Mode

During Alternate RX/TX FIFO Counter Mode, the first value read after EMSR bits 1-0 have been asserted will always be the RX FIFO Counter. The second value read will correspond with the TX FIFO Counter. The next value will be the RX FIFO Counter again, then the TX FIFO Counter and so on and so forth.

EMSR[3:2]: Reserved

The product (or products) mentioned in this data sheet are no longer being manufactured and may not be ordered (OBS)

EMSR[5:4]: Extended RTS Hysteresis

TABLE 13: EXTENDED RTS HYSTERESIS

EMSR BIT-5	EMSR BIT-4	FCTR BIT-1	FCTR BIT-0	RTS# HYSTERESIS (CHARACTERS)
0	0	0	0	0
0	0	0	1	±4
0	0	1	0	±6
0	0	1	1	±8
0	1	0	0	±8
0	1	0	1	±16
0	1	1	0	±24
0	1	1	1	±32
1	0	0	0	±40
1	0	0	1	±44
1	0	1	0	±48
1	0	1	1	±52
1	1	0	0	±12
1	1	0	1	±20
1	1	1	0	±28
1	1	1	1	±36

The product (or products) mentioned in this data sheet are no longer being manufactured and may not be ordered (OBS)

EMSR[7:6]: Reserved

4.12 FIFO Level Register (FLVL) - Read-Only

The FIFO Level Register replaces the Scratchpad Register (during a Read) when FCTR[6] = 1. Note that this is not identical to the FIFO Data Count Register which can be accessed when LCR = 0xBF.

FLVL[7:0]: FIFO Level Register

This register provides the FIFO counter level for the RX FIFO or the TX FIFO or both depending on EMSR[1:0]. See Table 12 for details.

4.13 Baud Rate Generator Registers (DLL and DLM) - Read/Write

The concatenation of the contents of DLM and DLL gives the 16-bit divisor value which is used to calculate the baud rate:

- Baud Rate = (Clock Frequency / 16) / Divisor

See MCR bit-7 and the baud rate table also.

4.14 Device Identification Register (DVID) - Read Only

This register contains the device ID (0x12 for XR16C2850). Prior to reading this register, DLL and DLM should be set to 0x00.

4.15 Device Revision Register (DREV) - Read Only

This register contains the device revision information. For example, 0x01 means revision A. Prior to reading this register, DLL and DLM should be set to 0x00.

4.16 Trigger Level / FIFO Data Count Register (TRG) - Write-Only

User Programmable Transmit/Receive Trigger Level Register.

TRG[7:0]: Trigger Level Register

These bits are used to program desired trigger levels when trigger Table-D is selected. FCTR bit-7 selects between programming the RX Trigger Level (a logic 0) and the TX Trigger Level (a logic 1).

4.17 FIFO Data Count Register (FC) - Read-Only

This register is accessible when LCR = 0xBF. Note that this register is not identical to the FIFO Level Register which is located in the general register set when FCTR bit-6 = 1.

FC[7:0]: FIFO Data Count Register

Transmit/Receive FIFO Count. Number of characters in Transmit (FCTR[7] = 1) or Receive FIFO (FCTR[7] = 0) can be read via this register.

4.18 Feature Control Register (FCTR) - Read/Write

This register controls the XR16C2850 new functions that are not available in ST16C550 or ST16C650A.

FCTR[1:0]: RTS Hysteresis

User selectable RTS# hysteresis levels for hardware flow control application. After reset, these bits are set to "0" to select the next trigger level for hardware flow control. See Table 13 for more details.

FCTR[2]: IrDa RX Inversion

- Logic 0 = Select RX input as encoded IrDa data (Idle state will be LOW).
- Logic 1 = Select RX input as inverted encoded IrDa data (Idle state will be HIGH).

FCTR[3]: Auto RS-485 Direction Control

This bit controls the functionality of the RTS# output if HDCNTL# is connected to VCC. If HDCNTL# is connected to GND, then the RTS# output will function as the RS-485 half-duplex direction control signal.

- Logic 0 = Standard ST16C550 mode. Transmitter generates an interrupt when transmit holding register becomes empty and transmit shift register is shifting data out.
- Logic 1 = Enable Auto RS485 Direction Control function. The direction control signal, RTS# pin, changes its output logic state from low to high one bit time after the last stop bit of the last character is shifted out. Also, the Transmit interrupt generation is delayed until the transmitter shift register becomes empty. The RTS# output pin will automatically return to a logic low when a data byte is loaded into the TX FIFO.

FCTR[5:4]: Transmit/Receive Trigger Table Select

See Table 10 for more details.

TABLE 14: TRIGGER TABLE SELECT

FCTR BIT-5	FCTR BIT-4	TABLE
0	0	Table-A (TX/RX)
0	1	Table-B (TX/RX)
1	0	Table-C (TX/RX)
1	1	Table-D (TX/RX)

FCTR[6]: Scratchpad Swap

- Logic 0 = Scratch Pad register is selected as general read and write register. ST16C550 compatible mode.
- Logic 1 = FIFO Count register (Read-Only), Enhanced Mode Select Register (Write-Only). Number of characters in transmit or receive FIFO can be read via scratch pad register when this bit is set. Enhanced Mode Select Register is selected when it is written into.

The product (or products) mentioned in this data sheet are no longer being manufactured and may not be ordered (OBS)

FCTR[7]: Programmable Trigger Register Select

- Logic 0 = Registers TRG and FC selected for RX.
- Logic 1 = Registers TRG and FC selected for TX.

4.19 Enhanced Feature Register (EFR)

Enhanced features are enabled or disabled using this register. Bit 0-3 provide single or dual consecutive character software flow control selection (see Table 15). When the Xon1 and Xon2 and Xoff1 and Xoff2 modes are selected, the double 8-bit words are concatenated into two sequential characters. Caution: note that whenever changing the TX or RX flow control bits, always reset all bits back to logic 0 (disable) before programming a new setting.

EFR[3:0]: Software Flow Control Select

Single character and dual sequential characters software flow control is supported. Combinations of software flow control can be selected by programming these bits.

The product (or products) mentioned in this datasheet are no longer being manufactured and may not be ordered (OBS)

TABLE 15: SOFTWARE FLOW CONTROL FUNCTIONS

EFR BIT-3 CONT-3	EFR BIT-2 CONT-2	EFR BIT-1 CONT-1	EFR BIT-0 CONT-0	TRANSMIT AND RECEIVE SOFTWARE FLOW CONTROL
0	0	0	0	No TX and RX flow control (default and reset)
0	0	X	X	No transmit flow control
1	0	X	X	Transmit Xon1, Xoff1
0	1	X	X	Transmit Xon2, Xoff2
1	1	X	X	Transmit Xon1 and Xon2, Xoff1 and Xoff2
X	X	0	0	No receive flow control
X	X	1	0	Receiver compares Xon1, Xoff1
X	X	0	1	Receiver compares Xon2, Xoff2
1	0	1	1	Transmit Xon1, Xoff1 Receiver compares Xon1 or Xon2, Xoff1 or Xoff2
0	1	1	1	Transmit Xon2, Xoff2 Receiver compares Xon1 or Xon2, Xoff1 or Xoff2
1	1	1	1	Transmit Xon1 and Xon2, Xoff1 and Xoff2, Receiver compares Xon1 and Xon2, Xoff1 and Xoff2
0	0	1	1	No transmit flow control, Receiver compares Xon1 and Xon2, Xoff1 and Xoff2

EFR[4]: Enhanced Function Bits Enable

Enhanced function control bit. This bit enables IER bits 4-7, ISR bits 4-5, FCR bits 4-5, and MCR bits 5-7 to be modified. After modifying any enhanced bits, EFR bit-4 can be set to a logic 0 to latch the new values. This feature prevents legacy software from altering or overwriting the enhanced functions once set. Normally, it is recommended to leave it enabled, logic 1.

- Logic 0 = modification disable/latch enhanced features. IER bits 4-7, ISR bits 4-5, FCR bits 4-5, and MCR bits 5-7 are saved to retain the user settings. After a reset, the IER bits 4-7, ISR bits 4-5, FCR bits 4-5, and MCR bits 5-7are set to a logic 0 to be compatible with ST16C550 mode (default).
- Logic 1 = Enables the above-mentioned register bits to be modified by the user.

EFR[5]: Special Character Detect Enable

- Logic 0 = Special Character Detect Disabled (default).
- Logic 1 = Special Character Detect Enabled. The UART compares each incoming receive character with data in Xoff-2 register. If a match exists, the receive data will be transferred to FIFO and ISR bit-4 will be set to indicate detection of the special character. Bit-0 corresponds with the LSB bit of the receive character. If flow control is set for comparing Xon1, Xoff1 (EFR [1:0]= '10') then flow control and special character work normally. However, if flow control is set for comparing Xon2, Xoff2 (EFR[1:0]= '01') then flow control works normally, but Xoff2 will not go to the FIFO, and will generate an Xoff interrupt and a special character interrupt, if enabled via IER bit-5.

EFR[6]: Auto RTS Flow Control Enable

RTS# output may be used for hardware flow control by setting EFR bit-6 to logic 1. When Auto RTS is selected, an interrupt will be generated when the receive FIFO is filled to the programmed trigger level and RTS de-asserts to a logic 1 at the next upper trigger level or hysteresis level. RTS# will return to a logic 0 when FIFO data falls below the next lower trigger level. The RTS# output must be asserted (logic 0) before the auto RTS can take effect. RTS# pin will function as a general purpose output when hardware flow control is disabled.

- Logic 0 = Automatic RTS flow control is disabled (default).
- Logic 1 = Enable Automatic RTS flow control.

EFR[7]: Auto CTS Flow Control Enable

Automatic CTS Flow Control.

- Logic 0 = Automatic CTS flow control is disabled (default).
- Logic 1 = Enable Automatic CTS flow control. Data transmission stops when CTS# input de-asserts to logic 1. Data transmission resumes when CTS# returns to a logic 0.

4.20 Software Flow Control Registers (XOFF1, XOFF2, XON1, XON2) - Read/Write

These registers are used as the programmable software flow control characters xoff1, xoff2, xon1, and xon2. For more details, see Table 6.

The product (or products) mentioned in this data sheet are no longer being manufactured and may not be ordered (OBS)

TABLE 16: UART RESET CONDITIONS FOR CHANNEL A AND B

REGISTERS	RESET STATE
DLL	Bits 7-0 = 0xXX
DLM	Bits 7-0 = 0xXX
RHR	Bits 7-0 = 0xXX
THR	Bits 7-0 = 0xXX
IER	Bits 7-0 = 0x00
FCR	Bits 7-0 = 0x00
ISR	Bits 7-0 = 0x01
LCR	Bits 7-0 = 0x00
MCR	Bits 7-0 = 0x00
LSR	Bits 7-0 = 0x60
MSR	Bits 3-0 = Logic 0 Bits 7-4 = Logic levels of the inputs inverted
SPR	Bits 7-0 = 0xFF
EMSR	Bits 7-0 = 0x00
FLVL	Bits 7-0 = 0x00
EFR	Bits 7-0 = 0x00
XON1	Bits 7-0 = 0x00
XON2	Bits 7-0 = 0x00
XOFF1	Bits 7-0 = 0x00
XOFF2	Bits 7-0 = 0x00
FC	Bits 7-0 = 0x00
I/O SIGNALS	**RESET STATE**
TX	HIGH
OP2#	HIGH
RTS#	HIGH
DTR#	HIGH
RXRDY#	HIGH
TXRDY#	LOW
INT	Three-State Condition

The product(s) mentioned in this data sheet are no longer being manufactured and may not be ordered (OBS)

ABSOLUTE MAXIMUM RATINGS

Power Supply Range	7 Volts
Voltage at Any Pin	GND-0.3 V to 7 V
Operating Temperature	-40° to +85°C
Storage Temperature	-65° to +150°C
Package Dissipation	500 mW

TYPICAL PACKAGE THERMAL RESISTANCE DATA (MARGIN OF ERROR: ± 15%)

Thermal Resistance (48-TQFP)	theta-ja =59°C/W, theta-jc = 16°C/W
Thermal Resistance (44-PLCC)	theta-ja = 50°C/W, theta-jc = 21°C/W

The product (or products) mentioned in this data sheet are no longer being manufactured and may not be ordered (OBS)

ELECTRICAL CHARACTERISTICS

DC ELECTRICAL CHARACTERISTICS

UNLESS OTHERWISE NOTED: TA=0° TO 70°C (-40° TO +85°C FOR INDUSTRIAL GRADE PACKAGE), VCC IS 2.97V TO 5.5V

SYMBOL	PARAMETER	LIMITS 3.3V MIN	LIMITS 3.3V MAX	LIMITS 5.0V MIN	LIMITS 5.0V MAX	UNITS	CONDITIONS
V_{ILCK}	Clock Input Low Level	-0.3	0.6	-0.5	0.6	V	
V_{IHCK}	Clock Input High Level (top mark date code of "DC YYWW" and older)	2.4	VCC	3.0	VCC	V	
V_{IHCK}	Clock Input High Level (top mark date code of "F2 YYWW" and newer)	2.4	5.5	3.0	5.5	V	
V_{IL}	Input Low Voltage	-0.3	0.8	-0.5	0.8	V	
V_{IH}	Input High Voltage (top mark date code of "DC YYWW" and older)	2.0	VCC	2.2	VCC	V	
V_{IH}	Input High Voltage (top mark date code of "F2 YYWW" and newer)	2.0	5.5	2.0	5.5	V	
V_{OLCK}	Clock Output (XTAL2) Low Voltage		0.4		0.4	V	I_{OL} = 6 mA I_{OL} = 4 mA
V_{OHCK}	Clock Output (XTAL2) High Voltage	2.0		2.4		V	I_{OH} = -6 mA I_{OH} = -1 mA
V_{OL}	Output Low Voltage	See Figure 14.					
V_{OH}	Output High Voltage	See Figure 15.					
I_{IL}	Input Low Leakage Current		±10		±10	uA	
I_{IH}	Input High Leakage Current		±10		±10	uA	
C_{IN}	Input Pin Capacitance		5		5	pF	
I_{CC}	Power Supply Current		1.2		3	mA	
I_{SLEEP}	Sleep Current		30		100	uA	See Test 1

Test 1: The following inputs should remain steady at VCC or GND state to minimize Sleep current: A0-A2, D0-D7, IOR#, IOW#, CSA# and CSB#. Also, RXA and RXB inputs must idle at logic 1 state while asleep.

FIGURE 14. XR16C2850 VOL SINK CURRENT CHART

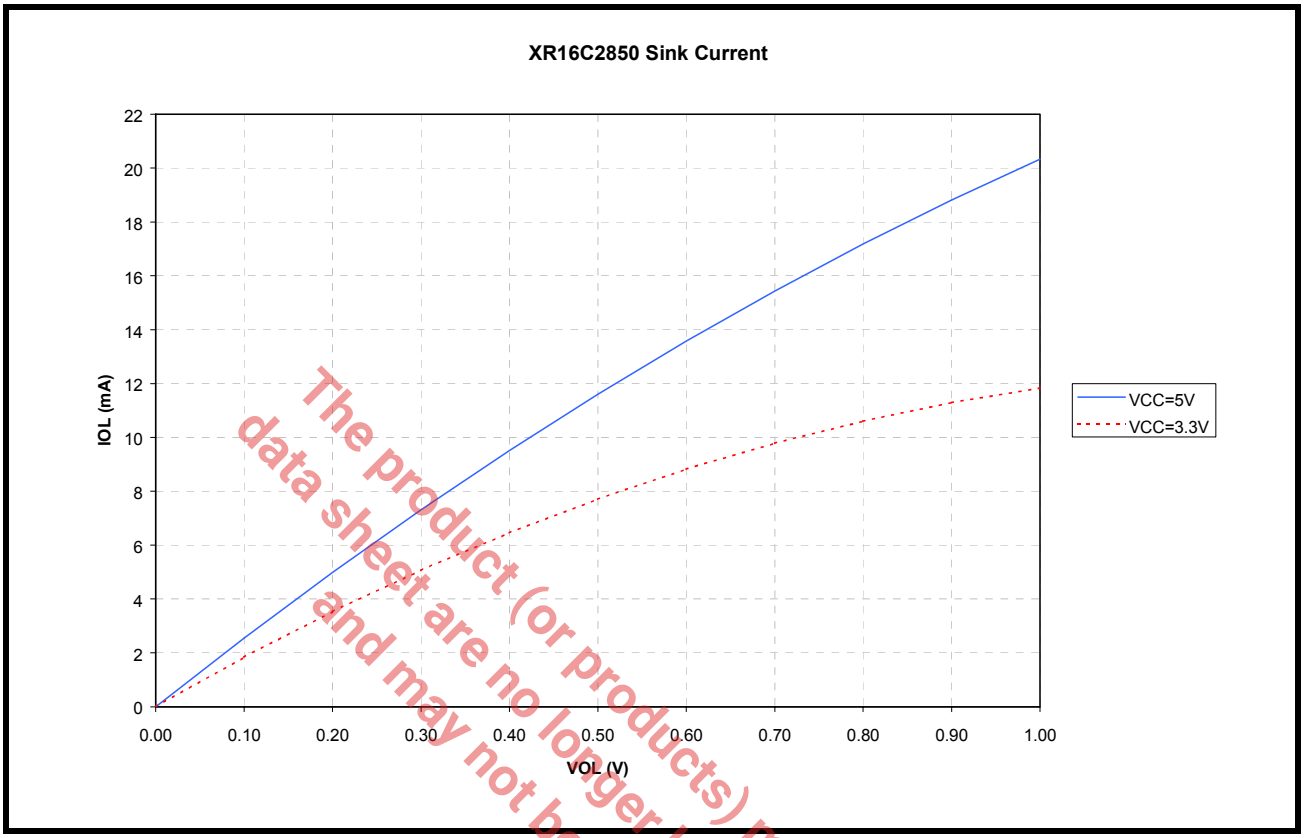

The product (or products) mentioned in this data sheet are no longer being manufactured and may not be ordered (OBS)

FIGURE 15. XR16C2850 VOH SOURCE CURRENT CHART

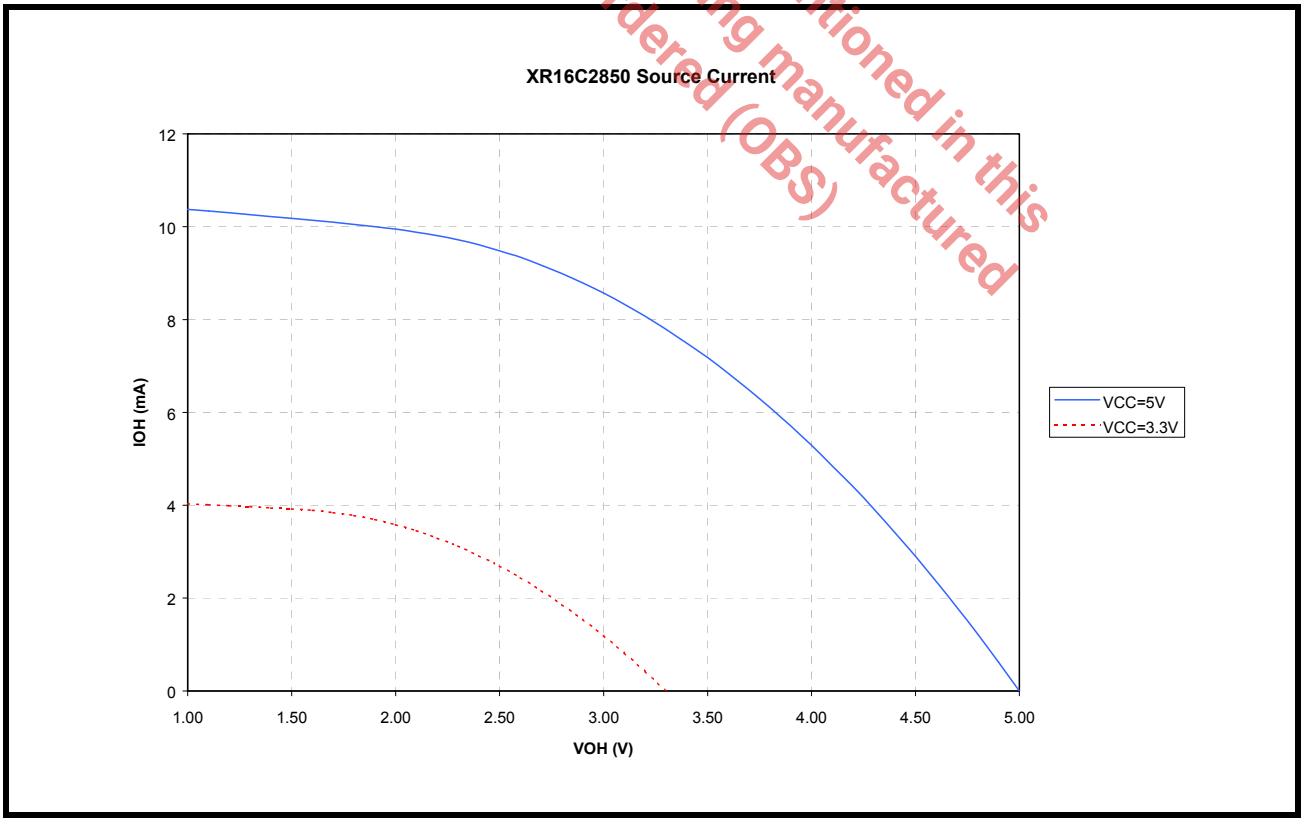

AC ELECTRICAL CHARACTERISTICS

TA=0° TO 70°C (-40° TO +85°C FOR INDUSTRIAL GRADE PACKAGE), VCC IS 2.90V TO 5.5V, 70 PF LOAD WHERE APPLICABLE

SYMBOL	PARAMETER	LIMITS 3.3		LIMITS 5.0		UNIT	CONDITIONS
		MIN	MAX	MIN	MAX		
CLK	Clock Pulse Duration	30		20		ns	
OSC	Oscillator Frequency		8		24	MHz	
OSC	External Clock Frequency		33		50	MHz	
TAS	Address Setup Time	5		0		ns	
TAH	Address Hold Time (top mark date code of "DC YYWW" and older)	10		5		ns	
TAH	Address Hold Time (top mark date code of "F2 YYWW" and newer)	0		0		ns	
TCS	Chip Select Width	66		50		ns	
TRD	IOR# Strobe Width	35		25		ns	
TDY	Read Cycle Delay	40		30		ns	
TRDV	Data Access Time		35		25	ns	
TDD	Data Disable Time	0	25	0	15	ns	
TWR	IOW# Strobe Width	40		25		ns	
TDY	Write Cycle Delay	40		30		ns	
TDS	Data Setup Time	20		15		ns	
TDH	Data Hold Time	5		5		ns	
TWDO	Delay From IOW# To Output		50		40	ns	100 pF load
TMOD	Delay To Set Interrupt From MODEM Input		40		35	ns	100 pF load
TRSI	Delay To Reset Interrupt From IOR#		40		35	ns	100 pF load
TSSI	Delay From Stop To Set Interrupt		1		1	Bclk	
TRRI	Delay From IOR# To Reset Interrupt		45		40	ns	100 pF load
TSI	Delay From Stop To Interrupt		45		40	ns	
TINT	Delay From Initial INT Reset To Transmit Start	8	24	8	24	Bclk	
TWRI	Delay From IOW# To Reset Interrupt		45		40	ns	
TSSR	Delay From Stop To Set RXRDY#		1		1	Bclk	
TRR	Delay From IOR# To Reset RXRDY#		45		40	ns	
TWT	Delay From IOW# To Set TXRDY#		45		40	ns	
TSRT	Delay From Center of Start To Reset TXRDY#		8		8	Bclk	

The product (or products) mentioned in this datasheet are no longer being manufactured and may not be ordered (OBS)

AC ELECTRICAL CHARACTERISTICS

TA=0° TO 70°C (-40° TO +85°C FOR INDUSTRIAL GRADE PACKAGE), VCC IS 2.90V TO 5.5V, 70 PF LOAD WHERE APPLICABLE

SYMBOL	PARAMETER	LIMITS 3.3 MIN	LIMITS 3.3 MAX	LIMITS 5.0 MIN	LIMITS 5.0 MAX	UNIT	CONDITIONS
TRST	Reset Pulse Width	40		40		ns	
N	Baud Rate Divisor	1	2^{16}-1	1	2^{16}-1	-	
Bclk	Baud Clock	16X or 8X of data rate				Hz	

The product(s) mentioned in this data sheet are no longer being manufactured and may not be ordered (OBS)

FIGURE 16. CLOCK TIMING

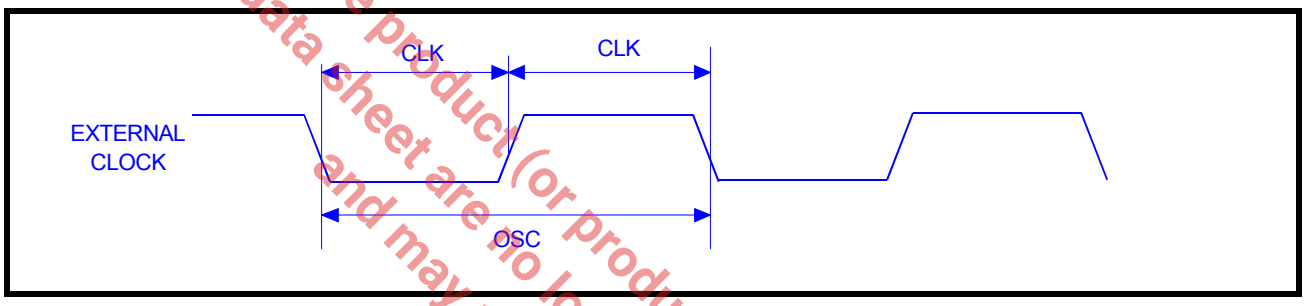

FIGURE 17. MODEM INPUT/OUTPUT TIMING FOR CHANNELS A & B

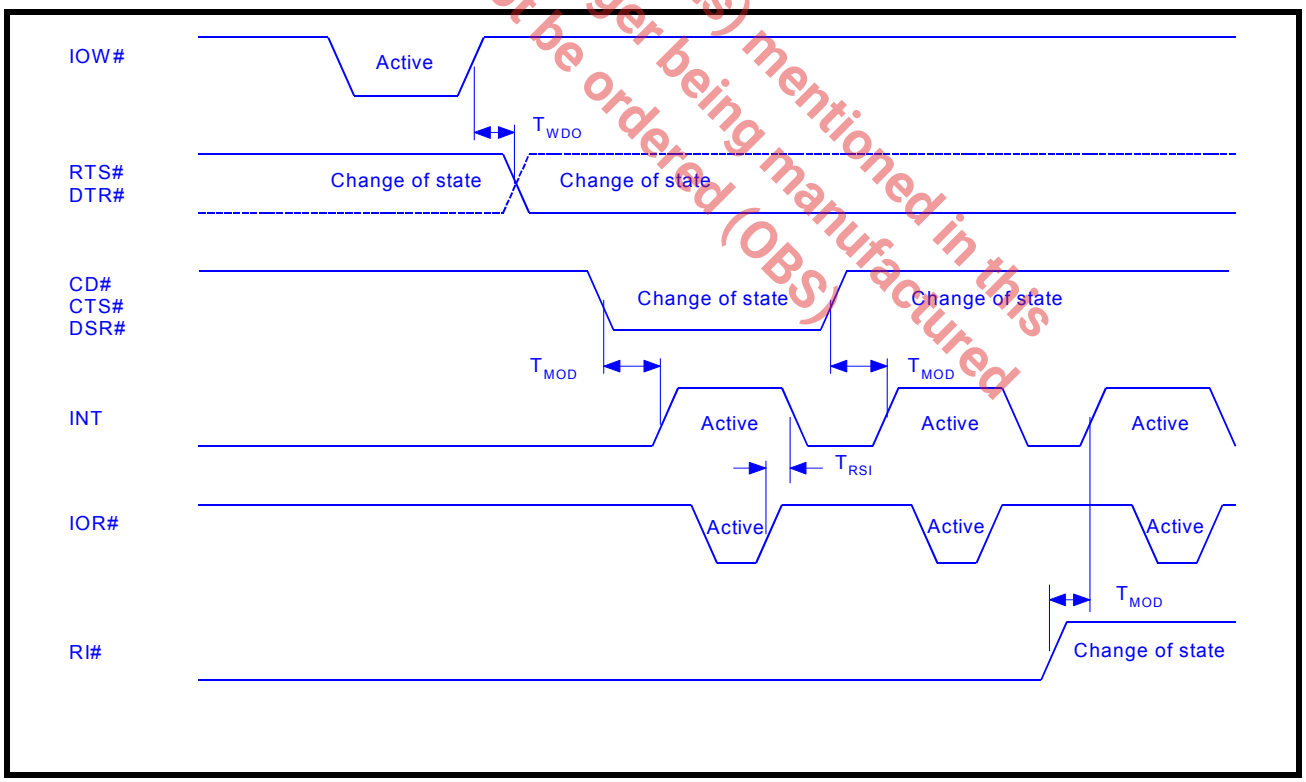

FIGURE 18. DATA BUS READ TIMING

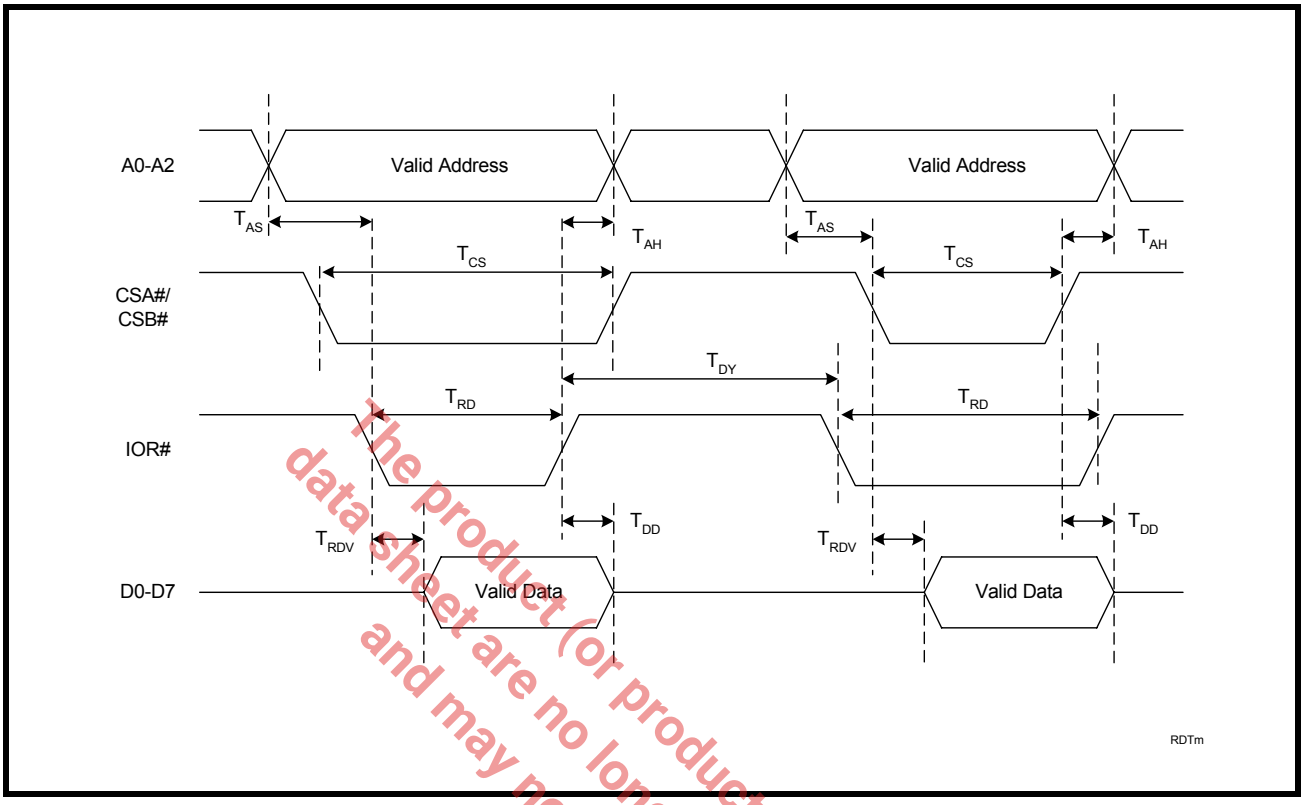

The product (or products) mentioned in this data sheet are no longer being manufactured and may not be ordered (OBS)

FIGURE 19. DATA BUS WRITE TIMING

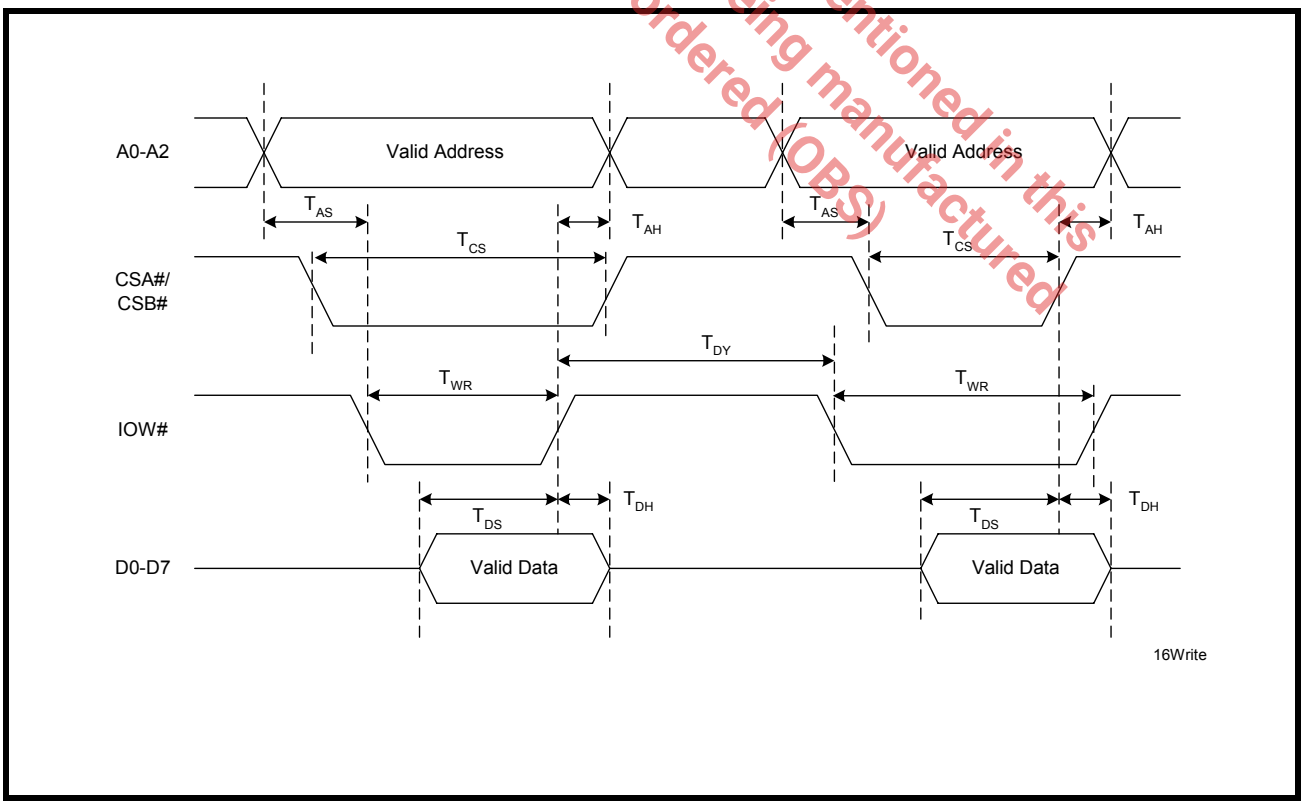

FIGURE 20. RECEIVE READY & INTERRUPT TIMING [NON-FIFO MODE] FOR CHANNELS A & B

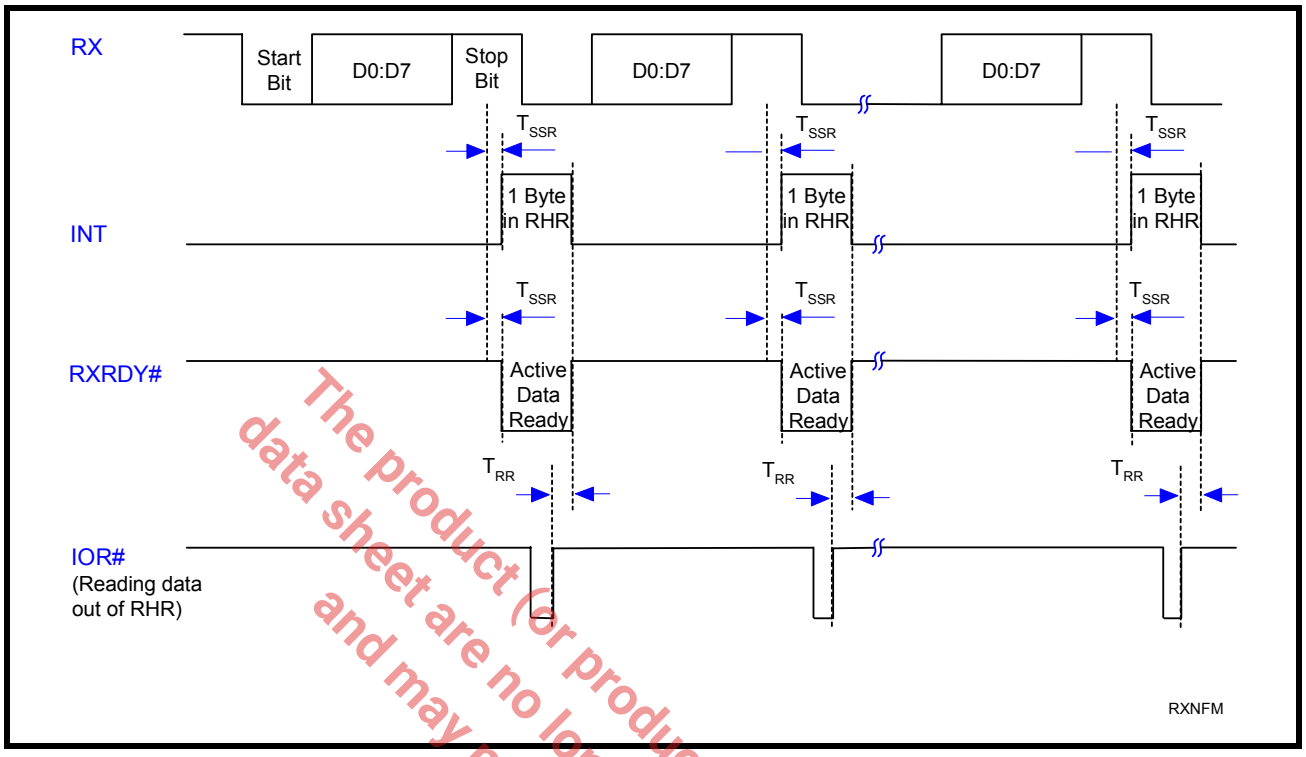

The product (or products) mentioned in this data sheet are no longer being manufactured and may not be ordered (OBS)

FIGURE 21. TRANSMIT READY & INTERRUPT TIMING [NON-FIFO MODE] FOR CHANNELS A & B

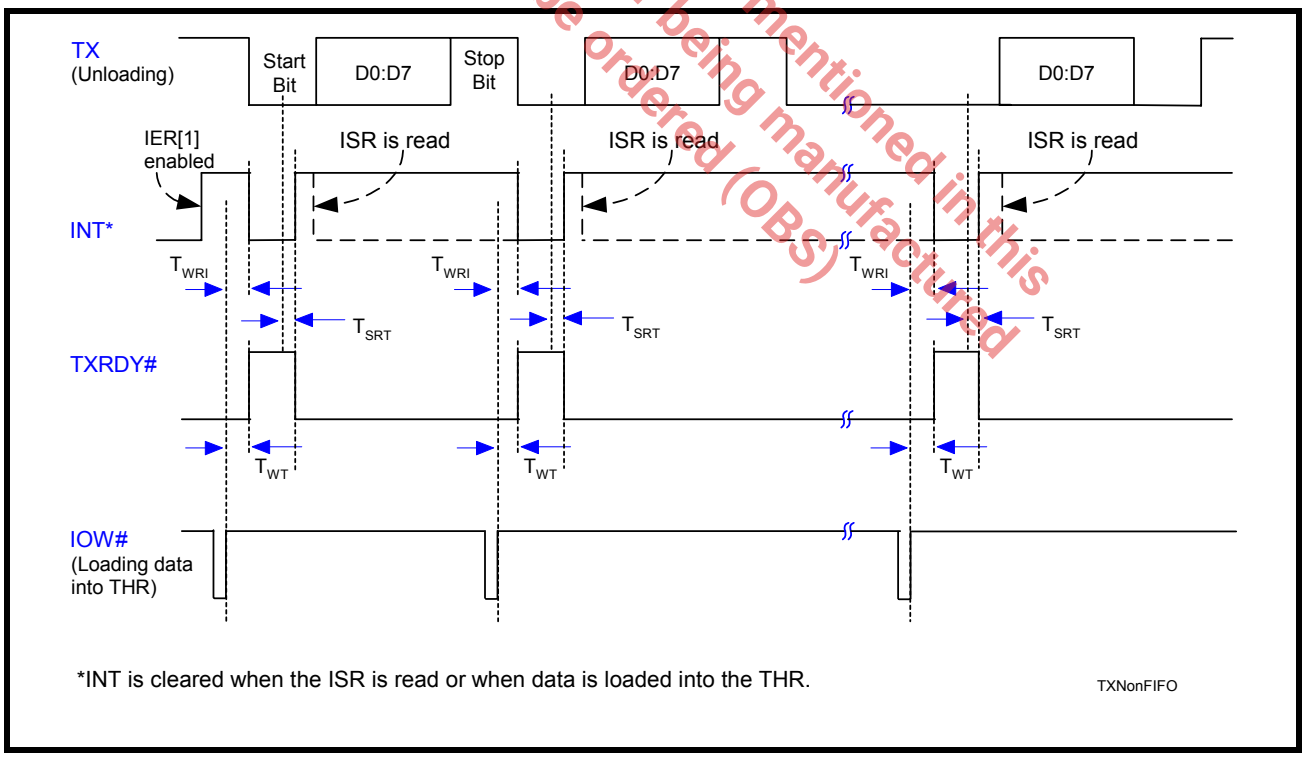

FIGURE 22. RECEIVE READY & INTERRUPT TIMING [FIFO MODE, DMA DISABLED] FOR CHANNELS A & B

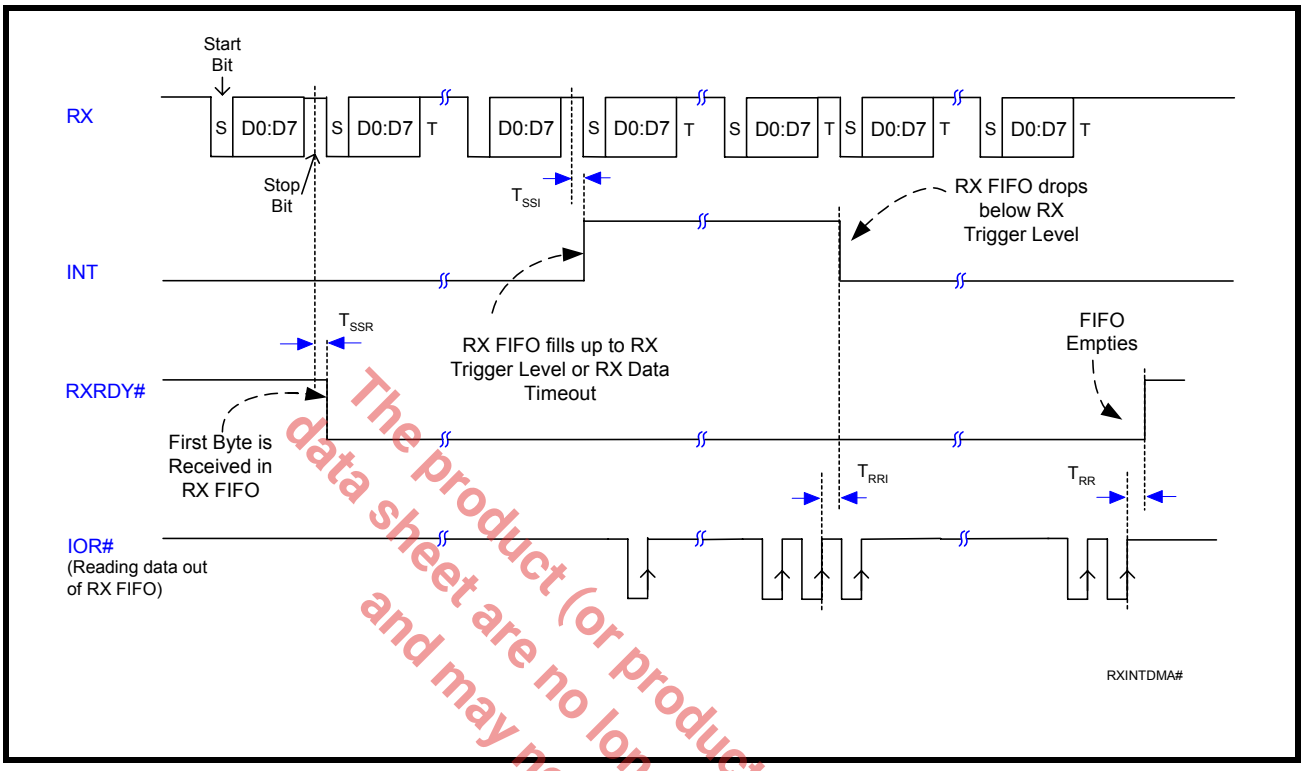

The product (or products) mentioned in this data sheet are no longer being manufactured and may not be ordered (OBS)

FIGURE 23. RECEIVE READY & INTERRUPT TIMING [FIFO MODE, DMA ENABLED] FOR CHANNELS A & B

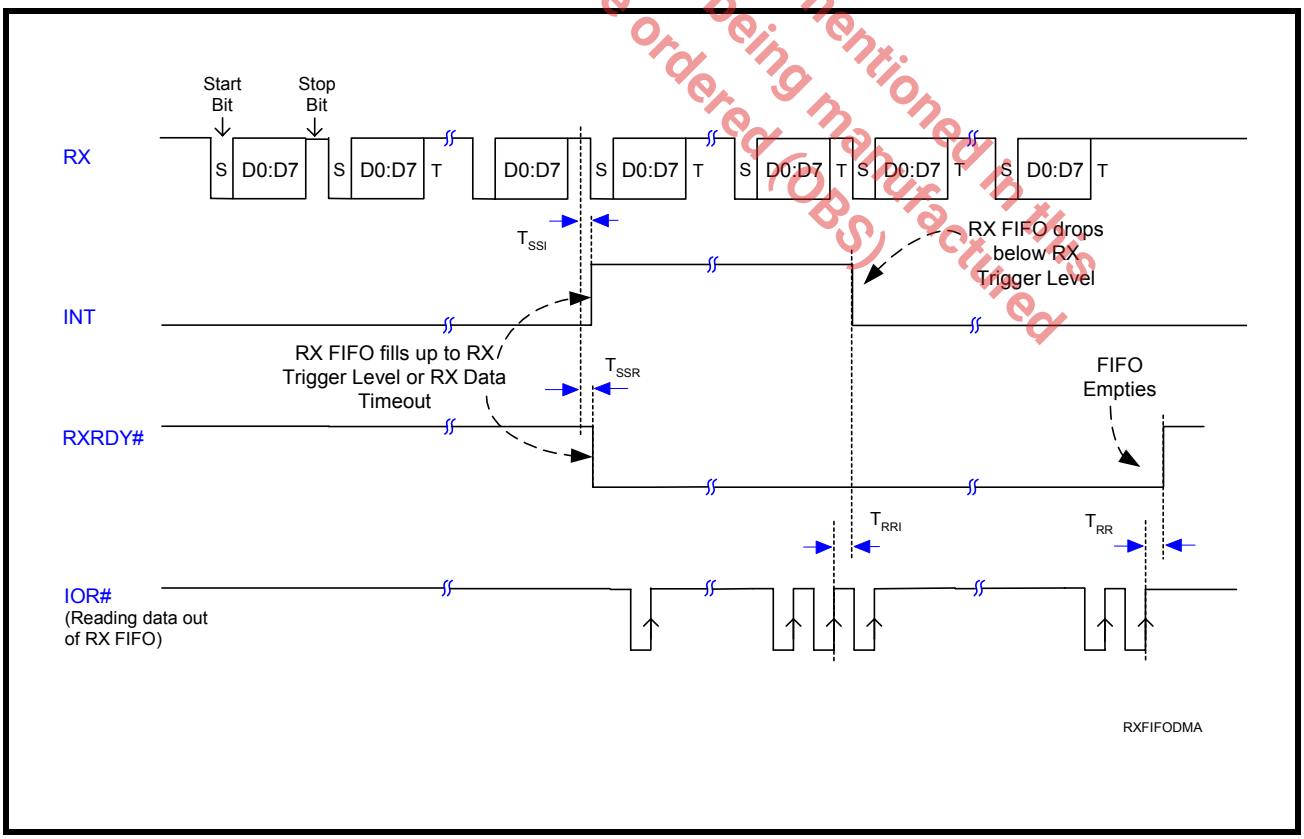

FIGURE 24. TRANSMIT READY & INTERRUPT TIMING [FIFO MODE, DMA MODE DISABLED] FOR CHANNELS A & B

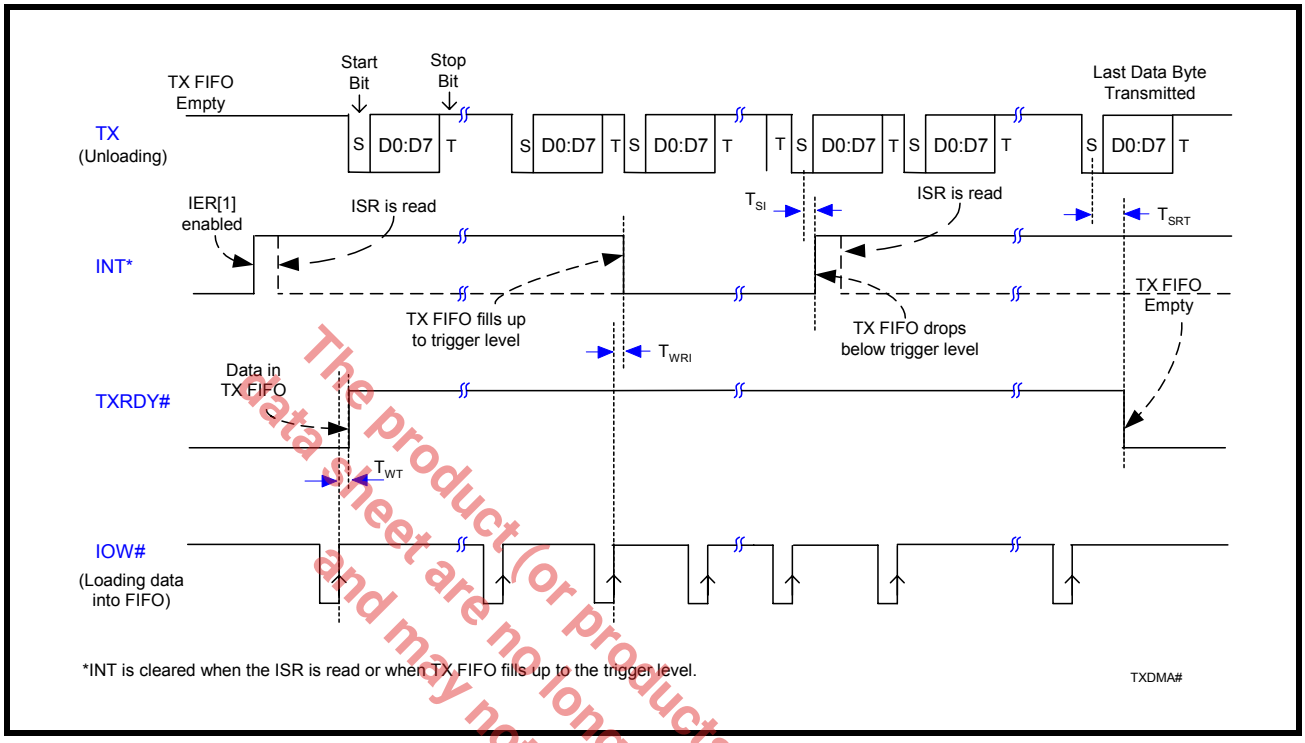

FIGURE 25. TRANSMIT READY & INTERRUPT TIMING [FIFO MODE, DMA MODE ENABLED] FOR CHANNELS A & B

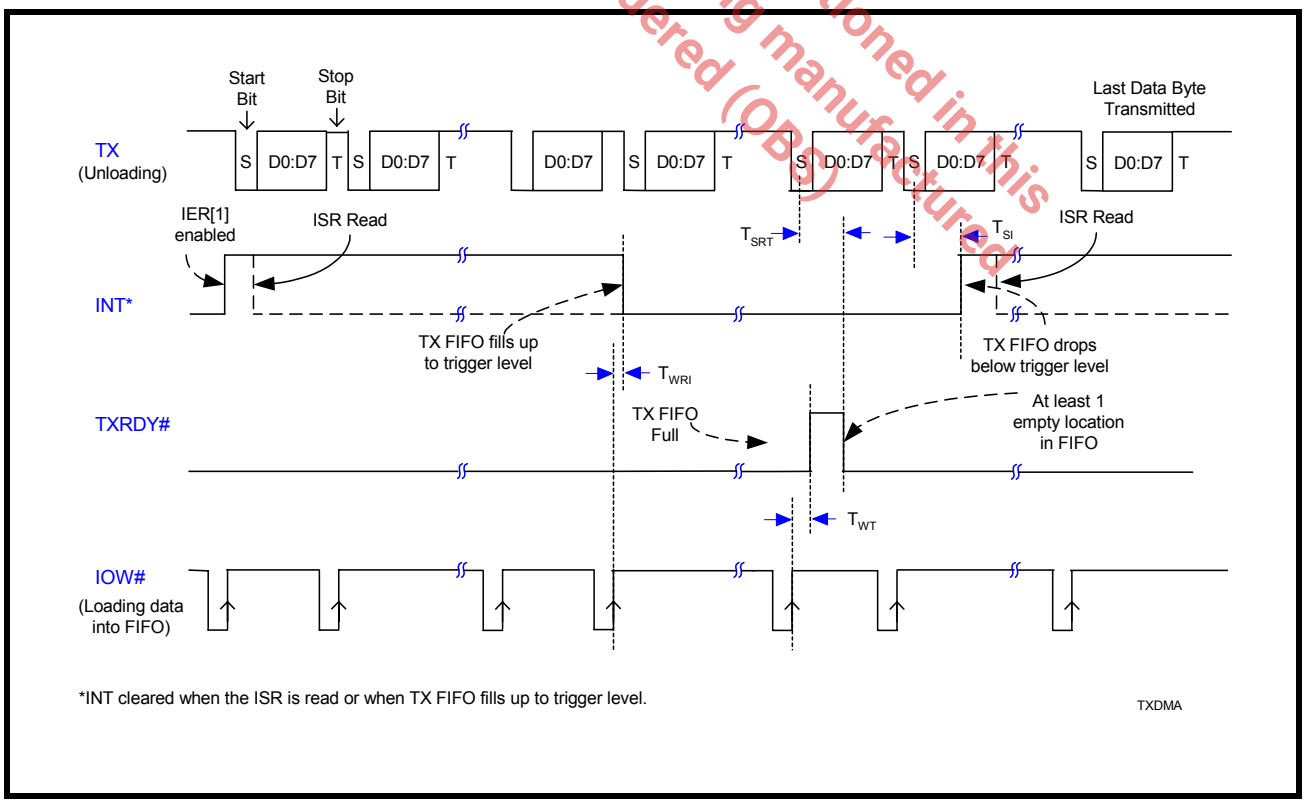

The product (or products) mentioned in this data sheet are no longer being manufactured and may not be ordered (OBS)

PACKAGE DIMENSIONS (48 PIN TQFP - 7 X 7 X 1 mm)

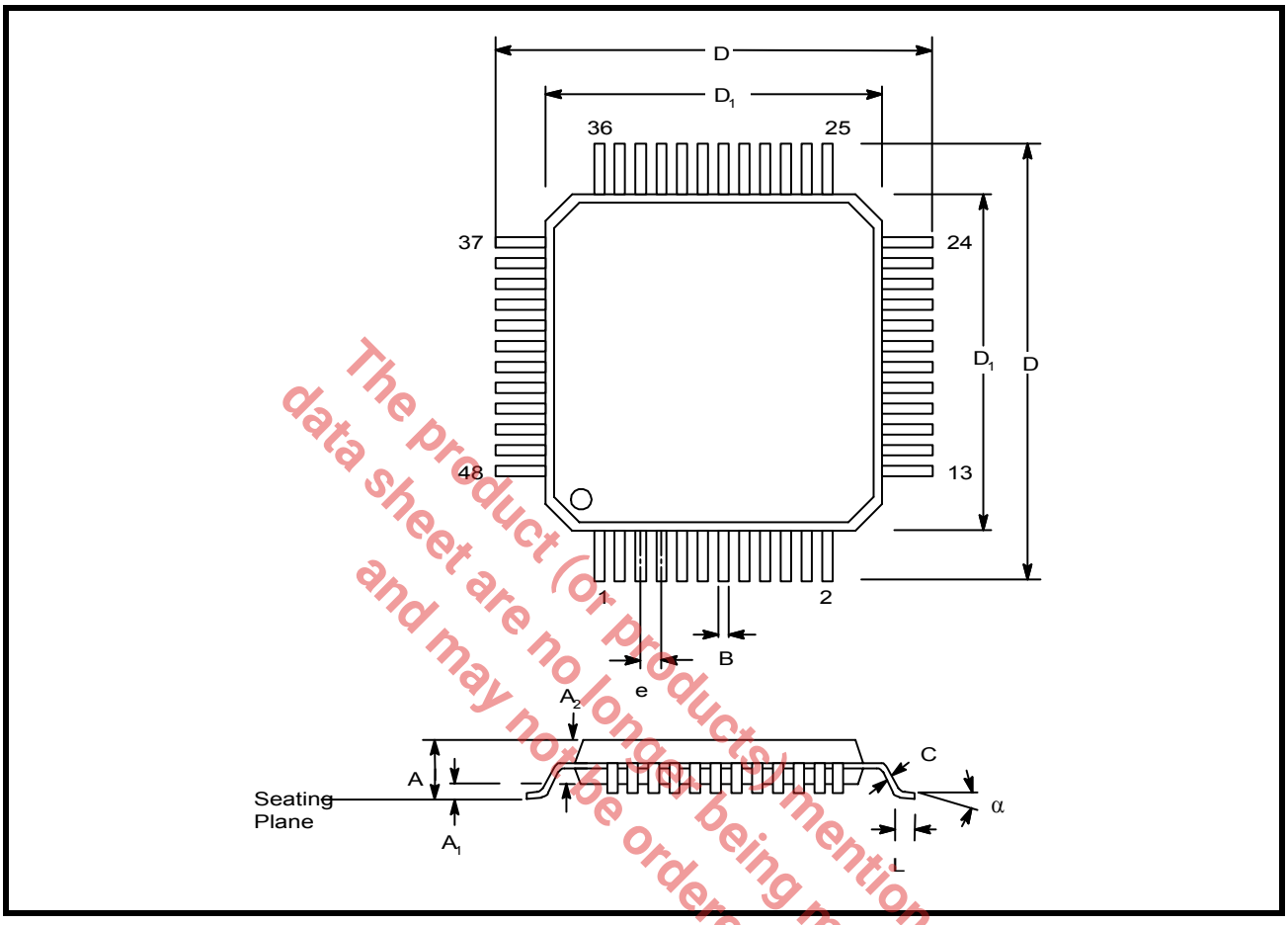

The product (or product(s) mentioned in this data sheet are no longer being manufactured and may not be ordered (OBS)

Note: The control dimension is the millimeter column

SYMBOL	INCHES		MILLIMETERS	
	MIN	MAX	MIN	MAX
A	0.039	0.047	1.00	1.20
A1	0.002	0.006	0.05	0.15
A2	0.037	0.041	0.95	1.05
B	0.007	0.011	0.17	0.27
C	0.004	0.008	0.09	0.20
D	0.346	0.362	8.80	9.20
D1	0.272	0.280	6.90	7.10
e	0.020 BSC		0.50 BSC	
L	0.018	0.030	0.45	0.75
a	0×	7×	0×	7×

PACKAGE DIMENSIONS (44 PIN PLCC)

44 LEAD PLASTIC LEADED CHIP CARRIER (PLCC)

Rev. 1.00

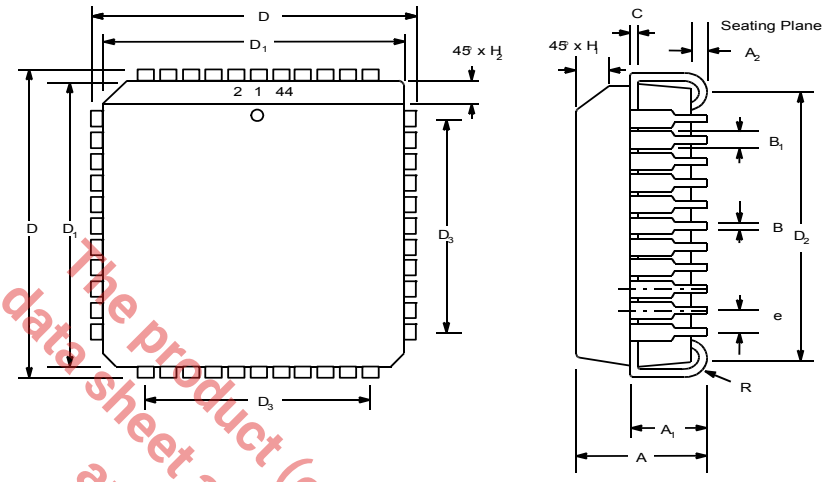

The product (or products) mentioned in this data sheet are no longer being manufactured and may not be ordered (OBS)

Note: The control dimension is the millimeter column

SYMBOL	INCHES		MILLIMETERS	
	MIN	MAX	MIN	MAX
A	0.165	0.180	4.19	4.57
A1	0.090	0.120	2.29	3.05
A2	0.020	---	0.51	---
B	0.013	0.021	0.33	0.53
B_1	0.026	0.032	0.66	0.81
C	0.008	0.013	0.19	0.32
D	0.685	0.695	17.40	17.65
D1	0.650	0.656	16.51	16.66
D_2	0.590	0.630	14.99	16.00
D_3	0.500 typ.		12.70 typ.	
e	0.050 BSC		1.27 BSC	
H_1	0.042	0.056	1.07	1.42
H_2	0.042	0.048	1.07	1.22
R	0.025	0.045	0.64	1.14

PACKAGE DIMENSIONS (40 PIN PDIP)

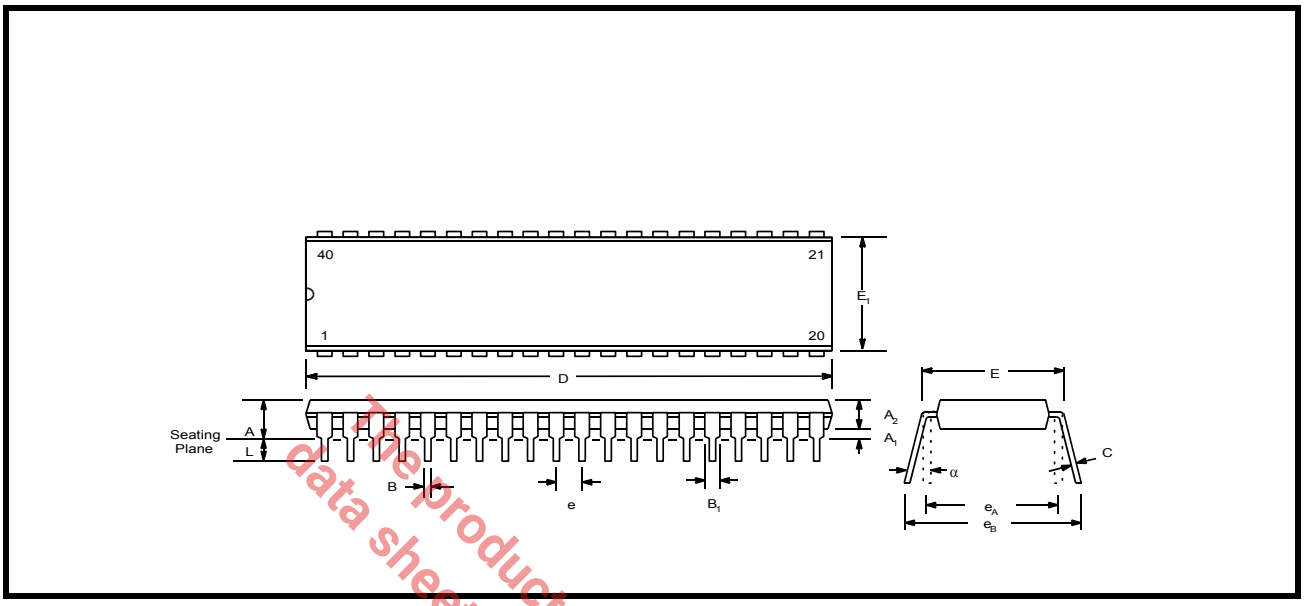

The product (or product(s) mentioned in this data sheet are no longer being manufactured and may not be ordered (OBS)

Note: The control dimension is the millimeter column

SYMBOL	INCHES		MILLIMETERS	
	MIN	MAX	MIN	MAX
A	0.160	0.250	4.06	6.35
A1	0.015	0.070	0.38	1.78
A2	0.125	0.195	3.18	4.95
B	0.014	0.024	0.36	0.56
B1	0.030	0.070	0.76	1.78
C	0.008	0.014	0.20	0.38
D	1.98	2.095	50.29	53.21
E	0.600	0.625	15.24	15.88
E1	0.485	0.580	12.32	14.73
e	0.100 BSC		2.54 BSC	
eA	0.600 BSC		15.24 BSC	
eB	0.600	0.700	15.24	17.78
L	0.115	0.200	2.92	5.08
a	0×	15×	0×	15×

REVISION HISTORY

Date	Revision	Description
February 2000	Rev 1.0.0	Initial datasheet.
April 2002	Rev 2.0.0	Changed to standard style format. Internal Registers are described in the order they are listed in the Internal Register Table. Clarified timing diagrams. Corrected Auto RTS Hysteresis table. Renamed Rclk (Receive Clock) to Bclk (Baud Clock) and timing symbols. Added T_{AH}, T_{CS} and OSC.
May 2004	Rev 2.1.0	Changed to single column format. Added device status to ordering information. Clarified sleep mode conditions. Clarified pin descriptions- changed from using logic 1 and logic 0 to HIGH (VCC) and LOW (GND) for input and output pin descriptions. Added VOL sink current and VOH source current charts (Figure 14 and Figure 15). Devices with top mark date code of "F2 YYWW" and newer have 5V tolerant inputs (except for XTAL1) and have 0 ns address hold time (T_{AH}). DREV register was updated to 0x06.
February 2005	Rev 2.1.1	Corrected datasheet to show that all inputs are 5V tolerant (including XTAL1) in devices with top mark date code of "F2 YYWW" and newer.
August 2005	Rev 2.1.2	Removed discontinued 40-pin PDIP from Ordering Information.
November 2005	Rev 2.1.3	Corrected part numbers in Ordering Information.

The product(or products) mentioned in this data sheet are no longer being manufactured and may not be ordered (OBS)

NOTICE

EXAR Corporation reserves the right to make changes to the products contained in this publication in order to improve design, performance or reliability. EXAR Corporation assumes no responsibility for the use of any circuits described herein, conveys no license under any patent or other right, and makes no representation that the circuits are free of patent infringement. Charts and schedules contained here in are only for illustration purposes and may vary depending upon a user's specific application. While the information in this publication has been carefully checked; no responsibility, however, is assumed for inaccuracies.

EXAR Corporation does not recommend the use of any of its products in life support applications where the failure or malfunction of the product can reasonably be expected to cause failure of the life support system or to significantly affect its safety or effectiveness. Products are not authorized for use in such applications unless EXAR Corporation receives, in writing, assurances to its satisfaction that: (a) the risk of injury or damage has been minimized; (b) the user assumes all such risks; (c) potential liability of EXAR Corporation is adequately protected under the circumstances.

Copyright 2005 EXAR Corporation

Datasheet November 2005.

Send your UART technical inquiry with technical details to hotline: uarttechsupport@exar.com.

Reproduction, in part or whole, without the prior written consent of EXAR Corporation is prohibited.

TABLE OF CONTENTS

GENERAL DESCRIPTION 1
APPLICATIONS 1
FEATURES 1
FIGURE 1. XR16C2850 BLOCK DIAGRAM 1
FIGURE 2. PIN OUT ASSIGNMENT 2
ORDERING INFORMATION 2
PIN DESCRIPTIONS 3
1.0 PRODUCT DESCRIPTION 7
2.0 FUNCTIONAL DESCRIPTIONS 8
2.1 CPU INTERFACE 8
FIGURE 3. XR16C2850 DATA BUS INTERCONNECTIONS 8
2.2 DEVICE RESET 8
2.3 DEVICE IDENTIFICATION AND REVISION 8
2.4 CHANNEL A AND B SELECTION 8
TABLE 1: CHANNEL A AND B SELECT 9
2.5 CHANNEL A AND B INTERNAL REGISTERS 9
2.6 DMA MODE 9
TABLE 2: TABLE 2TXRDY# AND RXRDY# OUTPUTS IN FIFO AND DMA MODE 9
2.7 INTA AND INTB OUPUTS 10
TABLE 3: INTA AND INTB PINS OPERATION FOR TRANSMITTER 10
TABLE 4: INTA AND INTB PIN OPERATION FOR RECEIVER 10
2.8 CRYSTAL OSCILLATOR OR EXTERNAL CLOCK INPUT 10
FIGURE 4. TYPICAL OSCILLATOR CONNECTIONS 10
2.9 PROGRAMMABLE BAUD RATE GENERATOR 11
FIGURE 5. EXTERNAL CLOCK CONNECTION FOR EXTENDED DATA RATE 11
FIGURE 6. BAUD RATE GENERATOR AND PRESCALER 11
TABLE 5: TYPICAL DATA RATES WITH A 14.7456 MHZ CRYSTAL OR EXTERNAL CLOCK 12
2.10 TRANSMITTER 12
2.10.1 TRANSMIT HOLDING REGISTER (THR) - WRITE ONLY 12
2.10.2 TRANSMITTER OPERATION IN NON-FIFO MODE 12
FIGURE 7. TRANSMITTER OPERATION IN NON-FIFO MODE 13
2.10.3 TRANSMITTER OPERATION IN FIFO MODE 13
FIGURE 8. TRANSMITTER OPERATION IN FIFO AND FLOW CONTROL MODE 13
2.11 RECEIVER 14
2.11.1 RECEIVE HOLDING REGISTER (RHR) - READ-ONLY 14
FIGURE 9. RECEIVER OPERATION IN NON-FIFO MODE 14
FIGURE 10. RECEIVER OPERATION IN FIFO AND AUTO RTS FLOW CONTROL MODE 15
2.12 AUTO RTS (HARDWARE) FLOW CONTROL 15
2.13 AUTO RTS HYSTERESIS 15
2.14 AUTO CTS FLOW CONTROL 16
FIGURE 11. AUTO RTS AND CTS FLOW CONTROL OPERATION 16
2.15 AUTO XON/XOFF (SOFTWARE) FLOW CONTROL 17
TABLE 6: AUTO XON/XOFF (SOFTWARE) FLOW CONTROL 17
2.16 SPECIAL CHARACTER DETECT 17
2.17 AUTO RS485 HALF-DUPLEX CONTROL 17
2.18 INFRARED MODE 18
FIGURE 12. INFRARED TRANSMIT DATA ENCODING AND RECEIVE DATA DECODING 18
2.19 SLEEP MODE WITH AUTO WAKE-UP 19
2.20 INTERNAL LOOPBACK 20
FIGURE 13. INTERNAL LOOP BACK IN CHANNELS A AND B 20
3.0 UART INTERNAL REGISTERS 21
TABLE 7: UART CHANNEL A AND B UART INTERNAL REGISTERS 21
TABLE 8: INTERNAL REGISTERS DESCRIPTION. SHADED BITS ARE ENABLED WHEN EFR BIT-4=1 22
4.0 INTERNAL REGISTER DESCRIPTIONS 23
4.1 RECEIVE HOLDING REGISTER (RHR) - READ- ONLY 23
4.2 TRANSMIT HOLDING REGISTER (THR) - WRITE-ONLY 23
4.3 INTERRUPT ENABLE REGISTER (IER) - READ/WRITE 23
4.3.1 IER VERSUS RECEIVE FIFO INTERRUPT MODE OPERATION 23
4.3.2 IER VERSUS RECEIVE/TRANSMIT FIFO POLLED MODE OPERATION 24

Obsolete product(s) mentioned in this data sheet are no longer being manufactured and may not be ordered (OBS)

4.4 INTERRUPT STATUS REGISTER (ISR) - READ-ONLY 25
4.4.1 INTERRUPT GENERATION: 25
4.4.2 INTERRUPT CLEARING: 25
TABLE 9: INTERRUPT SOURCE AND PRIORITY LEVEL 25
4.5 FIFO CONTROL REGISTER (FCR) - WRITE-ONLY 26
TABLE 10: TRANSMIT AND RECEIVE FIFO TRIGGER TABLE AND LEVEL SELECTION 27
4.6 LINE CONTROL REGISTER (LCR) - READ/WRITE 28
TABLE 11: PARITY SELECTION 29
4.7 MODEM CONTROL REGISTER (MCR) OR GENERAL PURPOSE OUTPUTS CONTROL - READ/WRITE 29
4.8 LINE STATUS REGISTER (LSR) - READ ONLY 30
4.9 MODEM STATUS REGISTER (MSR) - READ ONLY 31
4.10 SCRATCH PAD REGISTER (SPR) - READ/WRITE 32
4.11 ENHANCED MODE SELECT REGISTER (EMSR) 32
TABLE 12: SCRATCHPAD SWAP SELECTION 32
TABLE 13: EXTENDED RTS HYSTERESIS 33
4.12 FIFO LEVEL REGISTER (FLVL) - READ-ONLY 33
4.13 BAUD RATE GENERATOR REGISTERS (DLL AND DLM) - READ/WRITE 33
4.14 DEVICE IDENTIFICATION REGISTER (DVID) - READ ONLY 33
4.15 DEVICE REVISION REGISTER (DREV) - READ ONLY 33
4.16 TRIGGER LEVEL / FIFO DATA COUNT REGISTER (TRG) - WRITE-ONLY 34
4.17 FIFO DATA COUNT REGISTER (FC) - READ-ONLY 34
4.18 FEATURE CONTROL REGISTER (FCTR) - READ/WRITE 34
TABLE 14: TRIGGER TABLE SELECT 34
4.19 ENHANCED FEATURE REGISTER (EFR) 35
TABLE 15: SOFTWARE FLOW CONTROL FUNCTIONS 35
4.20 SOFTWARE FLOW CONTROL REGISTERS (XOFF1, XOFF2, XON1, XON2) - READ/WRITE 36
TABLE 16: UART RESET CONDITIONS FOR CHANNEL A AND B 37
ABSOLUTE MAXIMUM RATINGS 38
TYPICAL PACKAGE THERMAL RESISTANCE DATA (MARGIN OF ERROR: ± 15%) 38
ELECTRICAL CHARACTERISTICS 38
DC ELECTRICAL CHARACTERISTICS 38
FIGURE 14. XR16C2850 VOL SINK CURRENT CHART 39
FIGURE 15. XR16C2850 VOH SOURCE CURRENT CHART 39
AC ELECTRICAL CHARACTERISTICS 40
TA=0O TO 70OC (-40O TO +85OC FOR INDUSTRIAL GRADE PACKAGE), VCC IS 2.90V TO 5.5V, 70 PF LOAD WHERE APPLICABLE 40
FIGURE 16. CLOCK TIMING 41
FIGURE 17. MODEM INPUT/OUTPUT TIMING FOR CHANNELS A & B 41
FIGURE 19. DATA BUS WRITE TIMING 42
FIGURE 18. DATA BUS READ TIMING 42
FIGURE 20. RECEIVE READY & INTERRUPT TIMING [NON-FIFO MODE] FOR CHANNELS A & B 43
FIGURE 21. TRANSMIT READY & INTERRUPT TIMING [NON-FIFO MODE] FOR CHANNELS A & B 43
FIGURE 22. RECEIVE READY & INTERRUPT TIMING [FIFO MODE, DMA DISABLED] FOR CHANNELS A & B 44
FIGURE 23. RECEIVE READY & INTERRUPT TIMING [FIFO MODE, DMA ENABLED] FOR CHANNELS A & B 44
FIGURE 24. TRANSMIT READY & INTERRUPT TIMING [FIFO MODE, DMA MODE DISABLED] FOR CHANNELS A & B 45
FIGURE 25. TRANSMIT READY & INTERRUPT TIMING [FIFO MODE, DMA MODE ENABLED] FOR CHANNELS A & B 45
PACKAGE DIMENSIONS (48 PIN TQFP - 7 X 7 X 1 mm) 46
PACKAGE DIMENSIONS (44 PIN PLCC) 47
PACKAGE DIMENSIONS (40 PIN PDIP) 48
REVISION HISTORY 49
TABLE OF CONTENTS I

The product (or products) mentioned in this data sheet are no longer being manufactured and may not be ordered (OBS).