GENERAL DESCRIPTION

The XRT91L34 is a fully integrated quad channel multirate Clock and Data Recovery (CDR) device for SONET/SDH 622.08 Mbps STS-12/STM-4 or 155.52 Mbps STS-3/STM-1 or 51.84 Mbps STS-1/STM-0 applications. The device provides Clock and Data Recovery (CDR) function by synchronizing its on-chip Voltage Controlled Oscillator (VCO) to the incoming serial data stream. The device internally monitors Loss of Lock (LOL) conditions and automatically mutes recovered data upon Loss of Signal (LOS) conditions.

CLOCK AND DATA RECOVERY OVERVIEW

The clock and data recovery (CDR) unit accepts the high speed NRZ serial data from the LVDS or Differential LVPECL receiver and generates a clock that is the same frequency as the incoming data. The CDR block uses a reference clock to train and monitor its clock recovery PLL. All four channels share a single 77.76MHz or 19.44MHz reference clock. Upon startup, the PLL locks to the local reference clock. Once this is achieved, the PLL attempts to lock onto the incoming receive serial data stream. Whenever the recovered clock frequency deviates from the local reference clock frequency by more than approximately ±500 ppm, the clock recovery PLL will switch and lock back onto the local reference clock and declare a Loss of Lock. Whenever a Loss of Lock or a Loss of Signal event occurs, the CDR will continue to supply a recovered clock (based on the local reference) to the framer/ mapper device. When the SDEXT is de-asserted by the optical module or when internal DLOS is asserted, the receive serial data output will be forced to a logic zero state for the entire duration that a LOS condition is declared. This acts as a receive data mute upon LOS function to prevent random noise from being misinterpreted as valid incoming data. When the SDEXT becomes active and the recovered clock is determined to be within ±500 ppm accuracy with respect to the local reference source and LOS is no longer declared, the clock recovery PLL will switch and lock back onto the incoming receive serial data stream. **Figure 1** shows the block diagram of the XRT91L34.

The Product (or Products) mentioned in this datasheet are no longer being manufactured and may not be Ordered (OBS)

FIGURE 1. BLOCK DIAGRAM OF XRT91L34

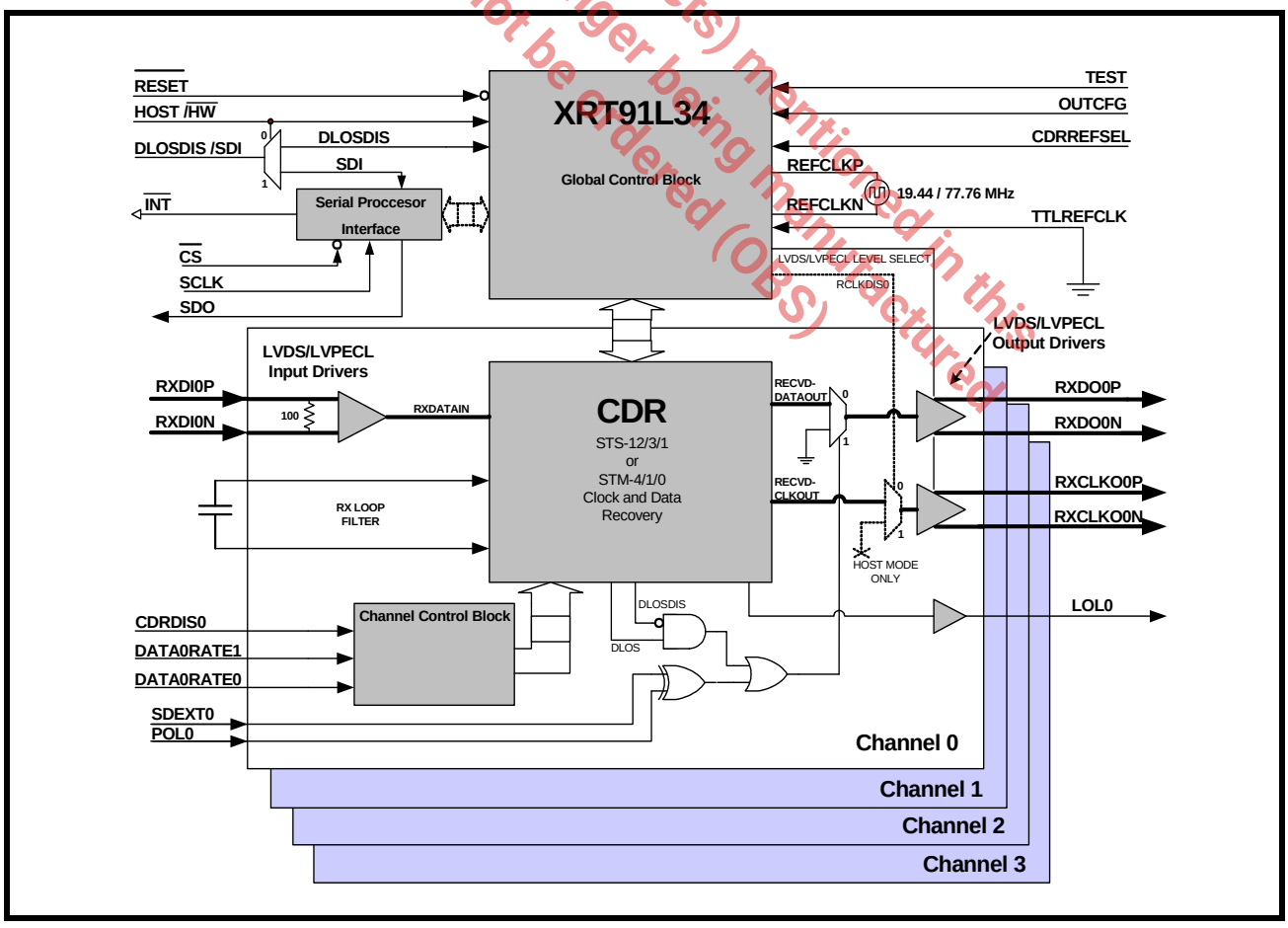

APPLICATIONS

- SONET/SDH-based Transmission Systems
- Add/Drop Multiplexers
- Cross Connect Equipment
- ATM and Multi-Service Switches, Routers and Switch/Routers
- DSLAMS
- SONET/SDH Test Equipment
- DWDM Termination Equipment

FEATURES

- Quad Channel CDR targeted for SONET STS-12/STS-3/STS-1 and SDH STM-4/STM-1/STM-0 Applications
- Selectable data rate operation between 622.08 Mbps, 155.52 Mbps, or 51.84 Mbps.
- Single-chip fully integrated solution containing quad-channel clock and data recovery (CDR) functions
- Optional flexibility to configure for LVDS or Differential LVPECL High Speed I/O Interface
- Internal 100Ω termination for the high speed LVDS/Differential LVPECL inputs included
- Utilizes reference clock frequency of either 19.44 MHz or 77.76 MHz
- Host mode serial microprocessor interface simplifies monitor and control, including LOS monitoring
- Diagnostics features include LOS monitoring in Host Mode and automatic recovered data mute upon LOS
- Loss of Lock Detect output for each channel
- Permits mixed data rate configuration of the four channels
- Independent power down control of unused channels for lower power operation
- Meets Telcordia, ANSI and ITU-T G.783 and G.825 SDH jitter requirements including T1.105.03 - 2002 SONET Jitter Tolerance specification, and GR-253 CORE, GR-253 ILR SONET Jitter specifications.
- Complies with ANSI/TIA/EIA-644 and IEEE P1596.3 3.3V LVDS standard, 3.3V Differential LVPECL, and JESD 8-B LVTTL and LVCMOS standard.
- Operates with dual power supply of 1.8V core and 3.3V IO supply
- 90mW LVDS/ 350mW Differential LVPECL per channel Typical Power Dissipation
- Package: 14 x 14 x 1.4 mm 128-pin LQFP
- RoHS Compliant Lead-Free package availability
- ESD greater than 2kV on all pins

The product (or products) mentioned in this data sheet are no longer being manufactured and may not be ordered (OBS)

FIGURE 2. 128 LQFP PIN OUT OF THE XRT91L34 (TOP VIEW)

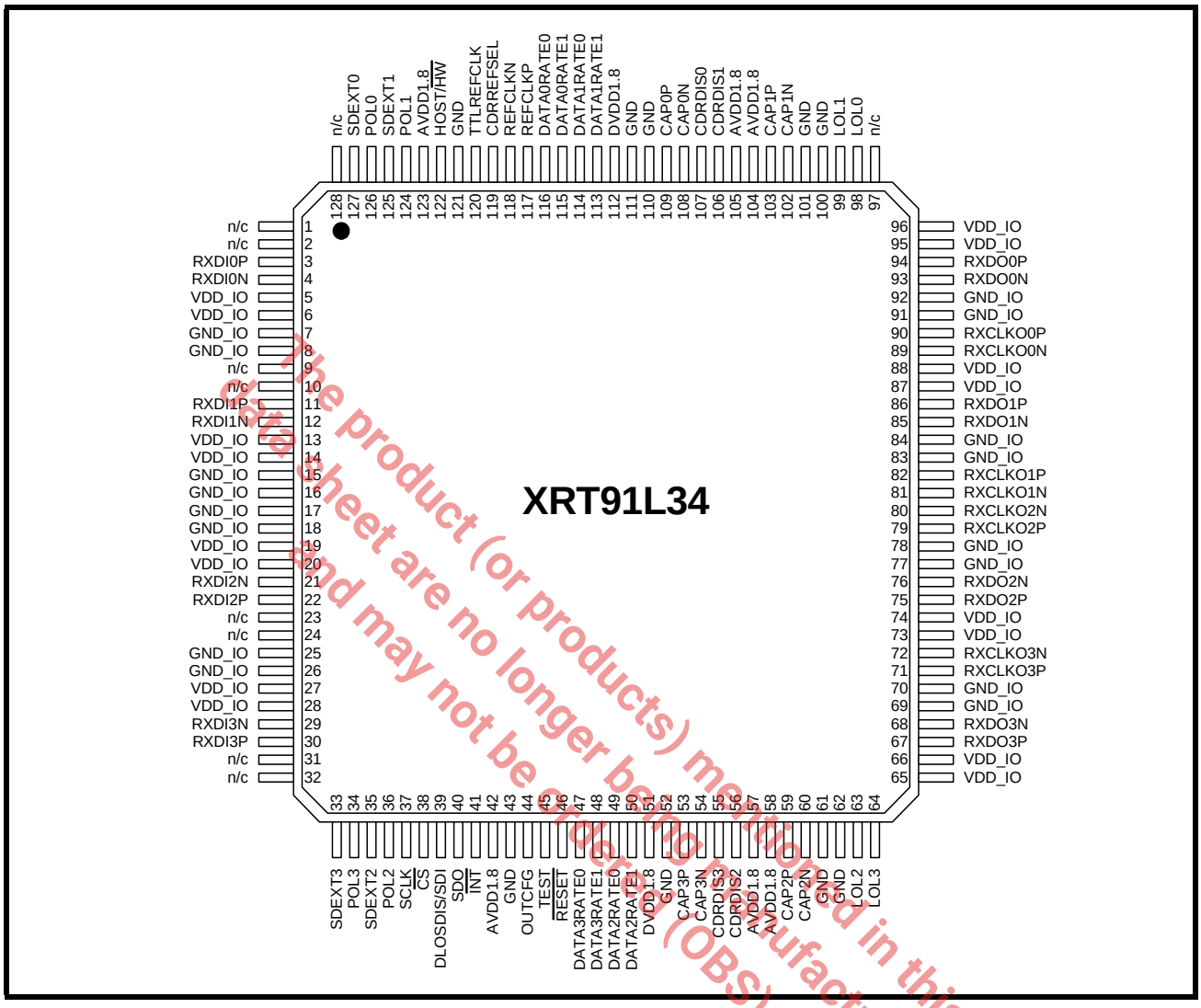

The product (or products) mentioned in this data sheet are no longer being manufactured and may not be ordered (OBS)

ORDERING INFORMATION

PART NUMBER	PACKAGE	OPERATING TEMPERATURE RANGE
XRT91L34IV	128 Pin Lead LQFP	-40°C to +85°C
XRT91L34IV-F	128 Pin Lead-Free LQFP	-40°C to +85°C

TABLE OF CONTENTS

GENERAL DESCRIPTION 1
FIGURE 1. BLOCK DIAGRAM OF XRT91L34 1
APPLICATIONS 2
FEATURES 2
FIGURE 2. 128 LQFP PIN OUT OF THE XRT91L34 (TOP VIEW) 3
ORDERING INFORMATION 3
TABLE OF CONTENTS IV
PIN DESCRIPTIONS 6
HARDWARE CONTROL 6
RECEIVER SECTION 9
POWER AND GROUND 10
SERIAL MICROPROCESSOR INTERFACE 11
1.0 FUNCTIONAL DESCRIPTION 12
1.1 HARDWARE MODE VS. HOST MODE 12
1.2 STS-12/STM-4 AND STS-3/STM-1 AND STS-1/STM-0 MODE OF OPERATION 12
TABLE 1: CHANNEL DATA RATE SELECTION 12
1.3 REFERENCE CLOCK INPUT 13
TABLE 2: CDR REFERENCE FREQUENCY OPTIONS (LVDS/ DIFF LVPECL OR SINGLE-ENDED LVTTL/LVCMOS) 13
FIGURE 3. REFERENCE CLOCK DESIGN OPTIONS 13
2.0 RECEIVE SECTION 14
2.1 RECEIVE SERIAL INPUT 14
FIGURE 4. RECEIVE SERIAL INPUT INTERFACE USING LVDS/DIFF LVPECL DC COUPLING INTERNAL TERM 14
FIGURE 5. RECEIVE SERIAL INPUT INTERFACE USING DIFF LVPECL AC COUPLING INTERNAL TERMINATION 15
2.2 RECEIVE CLOCK AND DATA RECOVERY 15
TABLE 3: CLOCK AND DATA RECOVERY UNIT PERFORMANCE 16
2.2.1 INTERNAL CLOCK AND DATA RECOVERY DISABLE 16
2.3 EXTERNAL RECEIVE LOOP FILTER CAPACITORS 16
FIGURE 6. EXTERNAL LOOP FILTERS 16
2.4 INTERNAL DIGITAL LOSS OF SIGNAL AND EXTERNAL SIGNAL DETECTION 17
FIGURE 7. LOSS OF SIGNAL DECLARATION CIRCUIT 17
TABLE 4: EXTERNAL LOS DECLARATION POLARITY SETTING 17
2.5 MULTICHANNEL RECOVERED OUTPUT INTERFACE 18
FIGURE 8. MULTICHANNEL RECOVERED OUTPUT INTERFACE BLOCK 18
2.6 DIFFERENTIAL RECOVERED DATA OUTPUT TIMING 19
FIGURE 9. DIFFERENTIAL RECOVERED OUTPUT TIMING 19
TABLE 5: RECOVERED DATA OUTPUT TIMING (STS-12/STM-4 OPERATION) 19
TABLE 6: RECOVERED DATA OUTPUT TIMING (STS-3/STM-1 OPERATION) 19
TABLE 7: RECOVERED DATA OUTPUT TIMING (STS-1/STM-0 OPERATION) 19
3.0 JITTER PERFORMANCE 20
3.1 SONET JITTER REQUIREMENTS 20
3.1.1 RX JITTER TOLERANCE: 20
FIGURE 10. GR-253/G.783 JITTER TOLERANCE MASK 20
FIGURE 11. XRT91L34 MEASURED JITTER TOLERANCE AT 51.84 MBPS STS-1/STM-0 20
FIGURE 12. XRT91L34 MEASURED JITTER TOLERANCE AT 155.52 MBPS STS-3/STM-1 21
FIGURE 13. XRT91L34 MEASURED JITTER TOLERANCE AT 622.08 MBPS STS-12/STM-4 21
3.1.2 RX JITTER TRANSFER 22
FIGURE 14. XRT91L34 MEASURED JITTER TRANSFER AT 51.84 MBPS STS-1/STM-0 22
FIGURE 15. XRT91L34 MEASURED JITTER TRANSFER AT 155.52 MBPS STS-3/STM-1 22
FIGURE 16. XRT91L34 MEASURED JITTER TRANSFER AT 622.08 MBPS STS-12/STM-4 23
4.0 SERIAL MICROPROCESSOR INTERFACE BLOCK 24
FIGURE 17. SIMPLIFIED BLOCK DIAGRAM OF THE SERIAL MICROPROCESSOR INTERFACE 24
4.1 SERIAL TIMING INFORMATION 24
FIGURE 18. TIMING DIAGRAM FOR THE SERIAL MICROPROCESSOR INTERFACE 24
4.2 16-BIT SERIAL DATA INPUT DESCRITPTION 25
4.2.1 R/W (SCLK1) 25
4.2.2 A[5:0] (SCLK2 - SCLK7) 25
4.2.3 X (DUMMY BIT SCLK8) 25
4.2.4 D[7:0] (SCLK9 - SCLK16) 25
4.3 8-BIT SERIAL DATA OUTPUT DESCRIPTION 25

The product (or products) mentioned in this data sheet are no longer being manufactured and may not be ordered (OBS)

5.0 REGISTER MAP AND BIT DESCRIPTIONS 26
TABLE 8: MICROPROCESSOR INTERFACE REGISTER MAP 26
TABLE 9: MICROPROCESSOR INTERFACE REGISTER 0X00 BIT DESCRIPTION 27
TABLE 10: MICROPROCESSOR INTERFACE REGISTER 0X01 BIT DESCRIPTION 28
TABLE 11: MICROPROCESSOR INTERFACE REGISTER 0X02 BIT DESCRIPTION 28
TABLE 12: MICROPROCESSOR INTERFACE REGISTER 0X03 BIT DESCRIPTION 29
TABLE 13: MICROPROCESSOR INTERFACE REGISTER 0X04 BIT DESCRIPTION 29
TABLE 14: MICROPROCESSOR INTERFACE REGISTER 0X05 BIT DESCRIPTION 29
TABLE 15: MICROPROCESSOR INTERFACE REGISTER 0X08, 0X10, 0X18, 0X20 BIT DESCRIPTION 30
TABLE 16: MICROPROCESSOR INTERFACE REGISTER 0X09, 0X11, 0X19, 0X21 BIT DESCRIPTION 31
TABLE 17: MICROPROCESSOR INTERFACE REGISTER 0X0A, 0X12, 0X1A, 0X22 BIT DESCRIPTION 32
6.0 ELECTRICAL CHARACTERISTICS 33
ABSOLUTE MAXIMUM RATINGS 33
TABLE 18: ABSOLUTE MAXIMUM POWER AND INPUT/OUTPUT RATINGS 33
TABLE 19: POWER AND CURRENT DC ELECTRICAL CHARACTERISTICS 33
TABLE 20: LVDS/DIFFERENTIAL LVPECL INPUT LOGIC SIGNAL DC ELECTRICAL CHARACTERISTICS 34
FIGURE 19. LVDS/DIFFERENTIAL LVPECL VOLTAGE PARAMETER CONVENTION 35
TABLE 21: LVDS OUTPUT LOGIC SIGNAL DC ELECTRICAL CHARACTERISTICS 36
TABLE 22: DIFFERENTIAL LVPECL OUTPUT LOGIC SIGNAL DC ELECTRICAL CHARACTERISTICS 36
TABLE 23: LVTTL/LVCMOS SIGNAL DC ELECTRICAL CHARACTERISTICS 36
TABLE 24: ORDERING INFORMATION 37
PACKAGE DIMENSIONS 37
TABLE 25: REVISION HISTORY 38

The product (or products) mentioned in this data sheet are no longer being manufactured and may not be ordered (OBS)

PIN DESCRIPTIONS

HARDWARE CONTROL

NAME	LEVEL	TYPE	PIN	DESCRIPTION
$\overline{\text{RESET}}$	LVTTL, LVCMOS	I	46	**Master Reset Input** Active "Low." When this pin is pulled "Low", the internal state machines and registers are set to their default state. "Low" = Master Hardware Reset "High" = Normal Operation This pin is provided with an internal pull-up.
TEST	LVTTL, LVCMOS	I	45	**Test Input** Active "High." When this pin is pulled "High", the 91L34 internal state machines will enter into a factory test mode. "Low" = Normal Operation "High" = Factory Test Diagnostic Mode ***NOTE:*** *This pin should be pulled Low for normal operation.* This pin is provided with an internal pull-down.
DATA0RATE[1:0]	LVTTL, LVCMOS	I	115, 116	**Data Rate Selection** Selects SONET/SDH reception speed rate for each of the four channels independently according to the logic below. DATAnRATE[1:0] / DATA RATE 0 0 — STS-1/STM-0 51.84 Mbps 0 1 — STS-3/STM-1 155.52 Mbps 1 0 — STS-12/STM-4 622.08 Mbps 1 1 — STS-12/STM-4 622.08 Mbps ***NOTE:*** *These pins have no function in Host Mode.* These pins are provided with internal pull-down.
DATA1RATE[1:0]	LVTTL, LVCMOS	I	113, 114	
DATA2RATE[1:0]	LVTTL, LVCMOS	I	50, 49	
DATA3RATE[1:0]	LVTTL, LVCMOS	I	48, 47	

The product (or products) mentioned in this data sheet are no longer being manufactured and may not be ordered (OBS).

<table>
<tr><th>NAME</th><th>LEVEL</th><th>TYPE</th><th>PIN</th><th>DESCRIPTION</th></tr>
<tr><td>CDRREFSEL</td><td>LVTTL, LVCMOS</td><td>I</td><td>119</td><td>Clock and Data Recovery Unit Reference Frequency Select
Selects the Clock and Data Recovery Unit reference frequency on REFCLKP/N pins or TTLREFCLK pin based on the table below.
"Low" = 77.76 MHz reference clock
"High" = 19.44 MHz reference clock
<table><tr><th>CDRREFSEL</th><th>REFCLKP/N OR TTLREFCLK FREQUENCY</th><th>CHANNEL 0 - 3 AVAILABLE DATA RATES</th></tr><tr><td>0</td><td>77.76 MHz</td><td rowspan="2">STS-12/STM-4 622.08 Mbps
STS-3/STM-1 155.52 Mbps
STS-1/STM-0 51.84 Mbps</td></tr><tr><td>1</td><td>19.44 MHz</td></tr></table>
NOTE: REFCLKP/N or TTLREFCLK input should be generated from a crystal oscillator which has a frequency accuracy better than 100ppm in order for the received data rate frequency to have the necessary accuracy required for SONET systems.
NOTE: This pin has no function in Host Mode.
This pin is provided with an internal pull-down.</td></tr>
<tr><td>OUTCFG</td><td>LVTTL, LVCMOS</td><td>I</td><td>44</td><td>Output Configuration
Globally selects recovered clock and data outputs to be LVDS or Differential LVPECL on all four channels based on table below.
"Low" = LVDS Standard Output
"High" = Differential LVPECL Standard Output
<table><tr><th>OUTCFG</th><th>Input Configuration</th><th>Output Configuration</th></tr><tr><td>0</td><td>LVDS/ Differential LVPECL</td><td>LVDS</td></tr><tr><td>1</td><td>LVDS/ Differential LVPECL</td><td>Differential LVPECL</td></tr></table>
This pin is provided with an internal pull-down.</td></tr>
<tr><td>CDRDIS0
CDRDIS1
CDRDIS2
CDRDIS3</td><td>LVTTL, LVCMOS</td><td>I</td><td>107
106
56
55</td><td>Clock and Data Recovery Unit Disable
Active "High." Disables internal Clock and Data Recovery unit for respective channel. This enables lower power operation when channel is unused.
"Low" = Internal CDR unit is Enabled
"High" = Internal CDR unit is Disabled
NOTE: These pins have no function in Host Mode.
These pins are provided with internal pull-down.</td></tr>
</table>

The product (or products) mentioned in this data sheet are no longer being manufactured and may not be ordered (OBS).

NAME	LEVEL	TYPE	PIN	DESCRIPTION
DLOSDIS /SDI	LVTTL, LVCMOS	I	39	**DLOS (Digital Loss of Signal) Disable** **Hardware Mode** Disables internal DLOS monitoring and automatic muting of RXDO[3:0]P/N recovered data output pins upon DLOS detection. DLOS is declared when the incoming data stream has no transition for more than 2.5µs. DLOS is cleared when transitions are detected within a 128µs interval sliding window. "Low" = Monitor & Mute recovered data upon DLOS declaration "High" = Disable internal DLOS monitoring This pin is provided with an internal pull-down. **Host Mode** This pin is functions as the microprocessor Serial Data Input.
POL0 POL1 POL2 POL3	LVTTL, LVCMOS	I	126 124 36 34	**Polarity for SDEXT Input** Controls the Signal Detect polarity convention of SDEXT. "Low" = SDEXT is active "Low." "High" = SDEXT is active "High." ***NOTE:*** *These pins have no function in Host Mode.* These pins are provided with internal pull-down.
SDEXT0 SDEXT1 SDEXT2 SDEXT3	LVTTL, LVCMOS,	I	127 125 35 33	**Signal Detect Input from Optical Module** When inactive, it will immediately declare a Loss of Signal (LOS) condition and assert LOS register bit and mute the activity of the RXDO[3:0]P/N serial data output on the respective channel. "Active" = Normal Operation "Inactive" = LOS Condition (SDEXT detects signal absence) These pins are provided with internal pull-down.
REFCLKP REFCLKN	LVDS, Diff LVPECL	I	117 118	**Reference Clock Input (77.76 MHz or 19.44 MHz)** This differential reference clock input will accept either a 77.76 MHz or a 19.44 MHz LVDS/Differential LVPECL clock source. Pin CDRREFSEL determines the value used as the reference. See Pin CDRREFSEL for more details. REFCLKP/N inputs are internally biased to 1.2V via 15kΩ resistance. These pins are equipped with a 100Ω line-to-line internal termination. ***NOTE:*** *In the event that TTLREFCLK LVTTL/LVCMOS input is used instead of these differential inputs for clock reference, the REFCLKP should be left unconnected and REFCLKN should be tied to GND.*
TTLREFCLK	LVTTL, LVCMOS	I	120	**TTL Reference Clock Input (77.76 MHz or 19.44 MHz)** This optional single-ended clock input reference can be used instead of the differential REFCLKP/N input. It will accept either a 77.76 MHz or a 19.44 MHz LVTTL clock source. Pin CDRREFSEL determines the value used as the reference. See Pin CDRREFSEL for more details. ***NOTE:*** *In the event that REFCLKP/N differential inputs are used instead of this LVTTL/LVCMOS input for clock reference, the TTLREFCLK should be tied to ground.* This pin is provided with an internal pull-down.

The product (or products) mentioned in this data sheet are no longer being manufactured and may not be ordered (OBS)

RECEIVER SECTION

NAME	LEVEL	TYPE	PIN	DESCRIPTION
RXDI0P RXDI0N RXDI1P RXDI1N RXDI2P RXDI2N RXDI3P RXDI3N	LVDS, Diff LVPECL	I	3 4 11 12 22 21 30 29	**Receive Serial Data Input** The differential receive serial data stream of 622.08 Mbps STS-12/STM-1 or 155.52 Mbps STS-3/STM-1 or 51.84 Mbps STS-1/STM-0 is applied to these differential input pins. These pins accept LVDS or Differential LVPECL input standard. These pins are internally biased to 1.2V via 15kΩ resistance and are equipped with a 100Ω line-to-line internal termination.
RXDO0P RXDO0N RXDO1P RXDO1N RXDO2P RXDO2N RXDO3P RXDO3N	LVDS, Diff LVPECL	O	94 93 86 85 75 76 67 68	**Recovered Serial Data Output** 622.08 Mbps STS-12/STM-4 / 155.52 Mbps STS-3/STM-1 / 51.84 Mbps STS-1/STM-0 differential recovered serial data output that is updated simultaneously on the **falling edge** of the corresponding channel RXCLKO output. User selectable LVDS standard or Differential LVPECL standard output based on OUTCFG pin state.
RXCLKO0P RXCLKO0N RXCLKO1P RXCLKO1N RXCLKO2P RXCLKO2N RXCLKO3P RXCLKO3N	LVDS, Diff LVPECL	O	90 89 82 81 79 80 71 72	**Recovered Clock Output** **(622.08 MHz/ 155.52 MHz/ 51.84 MHz)** 622.08 MHz STS-12/STM-4 / 155.52 MHz STS-3/STM-1 / 51.84 MHz STS-1/STM-0 differential clock output for the corresponding recovered data output RXDO[0:3]P/N. The recovered serial data output port will be updated on the **falling edge** of this clock. User selectable LVDS standard or Differential LVPECL standard output based on OUTCFG pin state.
LOL0 LOL1 LOL2 LOL3	LVCMOS	O	98 99 63 64	**CDR LOL Detect Output** This pin is used to monitor the lock condition of the PLL in the clock and data recovery unit of each channel. "Low" = CDR Locked "High" = CDR Out of Lock
CAP0P CAP0N	Analog	-	109 108	**CDR Non-polarized External Loop Filter Capacitors** **Mode of Operation:** 1. STS12/STM4: CAP[0:3]P/N = 0.47µF ± 10% tolerance 2. STS3/STM1: CAP[0:3]P/N = 0.47µF ± 10% tolerance 3. STS1/STM0: CAP[0:3]P/N = 1.0µF ± 10% tolerance Use type X7R or X5R for improved stability over temperature. (Isolate from noise and place close to pin)
CAP1P CAP1N	Analog	-	103 102	
CAP2P CAP2N	Analog	-	59 60	
CAP3P CAP3N	Analog	-	53 54	

The product (or product(s) mentioned in this data sheet are no longer being manufactured and may not be ordered (OBS)

POWER AND GROUND

NAME	TYPE	PIN	DESCRIPTION
AVDD1.8	PWR	42, 57, 58, 104, 105, 123	**1.8V Analog Core Power Supply** AVDD1.8 should be isolated from DVDD1.8 and 3.3V VDD_IO power supplies. For best results, use a ferrite bead along with an internal power plane separation. The AVDD1.8 power supply pins should have bypass capacitors to the nearest ground.
DVDD1.8	PWR	51, 112	**1.8V Digital Core Power Supply** DVDD1.8 should be isolated from AVDD1.8 and 3.3V VDD_IO power supplies. For best results, use an internal power plane separation. The DVDD1.8 power supply pins should have bypass capacitors to the nearest ground.
VDD_IO	PWR	5, 6, 13, 14, 19, 20, 27, 28, 65, 66, 73, 74, 87, 88, 95, 96	**3.3V Input/Output Bus Power Supply** These pins require a 3.3V potential voltage for properly biasing the Differential LVDS/Differential LVPECL and LVCMOS/LVTTL input and output pins. VDD_IO should be isolated from the AVDD1.8 and DVDD1.8 Core power supplies. For best results, use a ferrite bead along with an internal power plane separation. The VDD_IO power supply pins should have bypass capacitors to the nearest ground.
GND_IO	GND	7, 8, 15, 16, 17, 18, 25, 26, 69, 70, 77, 78, 83, 84, 91, 92	**Ground for 3.3V VDD Input/Output Power Supplies** It is recommended that all ground pins of this device be tied together.
GND	GND	43, 52, 61, 62, 100, 101, 110, 111, 121	**Power Supply and Thermal Ground** It is recommended that all ground pins of this device be tied together.
NC		1, 2, 9, 10, 23, 24, 31, 32, 97, 128	**No Connect**

The product (or products) mentioned in this data sheet are no longer being manufactured and may not be ordered (OBS)

SERIAL MICROPROCESSOR INTERFACE

NAME	LEVEL	TYPE	PIN	DESCRIPTION
HOST/$\overline{HW}$	LVTTL, LVCMOS	I	122	**Host or Hardware Mode Select Input** The XRT91L34 offers two modes of operation for interfacing to the device. The Host mode uses a serial microprocessor interface for programming individual registers. The Hardware mode is controlled by the state of the hardware pins set by the user. When left unconnected, by default, the device is configured in the Hardware mode. "Low" = Hardware Mode "High" = Host Mode This pin is provided with an internal pull-down.
$\overline{CS}$	LVTTL, LVCMOS	I	38	**Chip Select Input (Host Mode)** Active "Low" signal. This signal enables the serial microprocessor interface by pulling chip select "Low". The serial microprocessor is disabled when the chip select signal returns "High". ***NOTES:*** 1. *The serial microprocessor interface does **not** support burst mode. Chip Select must be de-asserted after each operation cycle.* 2. *Chip Select is only active in Host Mode.* This pin is provided with an internal pull-up.
SCLK	LVTTL, LVCMOS	I	37	**Serial Clock Input (Host Mode Only)** Once $\overline{CS}$ is pulled "Low", the serial microprocessor interface requires 16 clock cycles for a complete Read or Write operation. Serial Clock Input is only active in Host Mode. This pin is provided with an internal pull-down.
DLOSDIS /SDI	LVTTL, LVCMOS	I	39	**Serial Data Input (Host Mode Only)** When $\overline{CS}$ is pulled "Low", the serial data input is sampled on the rising edge of SCLK. Serial Data Input is only active in Host Mode. This pin is provided with an internal pull-down. **Hardware Mode** This pin is functions as the DLOSDIS control pin.
SDO	LVCMOS	O	40	**Serial Data Output (Host Mode Only)** If a Read function is initiated, the serial data output is updated on the falling edge of SCLK8 through SCLK15, with the LSB (D0) updated first. This enables the data to be sampled on the rising edge of SCLK9 through SCLK16. Serial Data Output is only active in Host Mode.
$\overline{INT}$	LVCMOS	O	41	**Interrupt Output (Host Mode Only)** Active "Low" signal. This signal is asserted "Low" when a change in alarm status occurs. Once the status registers have been read, the interrupt pin will return "High". Interrupt Output is only active in Host Mode. ***NOTE:*** *This open-drain output pin requires an external pull-up resistor.*

The product (or products) mentioned in this data sheet are no longer being manufactured and may not be ordered. (OBS)

1.0 FUNCTIONAL DESCRIPTION

The XRT91L34 Quad Channel CDR is designed to operate with a multichannel SONET Framer/ASIC device and provide a high-speed serial clock and data recovery interface to optical networks. The CDR receives differential NRZ serial bit stream running at STS-12/STM-4 or STS-3/STM-1 or STS-1/STM-0, and outputs recovered serial clock and data via differential LVDS/LVPECL drivers. It implements four independently configurable receive clock and data recovery (CDR) units and a LOL and LOS detection circuit (Host Mode Only) for each channel. The CDR is used to provide the front end component of SONET equipment.

1.1 Hardware Mode vs. Host Mode

Functional control of the receiver can be configured by using either Host mode or Hardware mode. Hardware mode is selected by pulling HOST/HW "Low" or leaving this pin unconnected. The receiver functionality is then controlled by the hardware pins described in the Hardware Pin Descriptions. Host mode is selected by pulling HOST/HW "High". In Host mode the functionality is controlled by programming internal R/W registers using the Serial Microprocessor interface. Host mode offers functions not available in Hardware mode, such as Loss of Signal Monitoring, Interrupt Generation and Disabling of the recovered clock output.

1.2 STS-12/STM-4 and STS-3/STM-1 and STS-1/STM-0 Mode of Operation

The data rate of each receiver channel can be configured by using the appropriate signal level on the DATAnRATE1:0] pins (where n = channel 0, 1, 2, or 3) as shown in **Table 1**.

TABLE 1: CHANNEL DATA RATE SELECTION

DATAnRATE[1:0]		DATA RATE SELECTED FOR CHANNEL N
0	**0**	STS-1/STM-0 51.84 Mbps
0	**1**	STS-3/STM-1 155.52 Mbps
1	**0**	STS-12/STM-4 622.08 Mbps
1	**1**	STS-12/STM-4 622.08 Mbps

NOTE: *n denotes channel number.*

The product (or products) mentioned in this data sheet are no longer being manufactured and may not be ordered (OBS)

1.3 Reference Clock Input

The XRT91L34 can accept either a 19.44 MHz or 77.76 MHz Differential clock input at REFCLKP/N or a Single-Ended LVTTL clock input at TTLREFCLK. The REFCLKP/N or TTLREFCLK should be generated from a source which has a frequency accuracy better than ±100ppm in order for the CDR Loss of Lock detector to have the necessary accuracy required for SONET systems. The reference clock can be provided with one of two frequencies chosen by CDRREFSEL. The reference frequency options for the XRT91L34 are listed in Table 2. Figure 3 illustrate the reference clock design options.

TABLE 2: CDR REFERENCE FREQUENCY OPTIONS (LVDS/ DIFF LVPECL OR SINGLE-ENDED LVTTL/LVCMOS)

CDRREFSEL	REFCLKP/N OR TTLREFCLK FREQUENCY	CHANNEL 0 - 3 AVAILABLE DATA RATES
0	77.76 MHz	STS-1/STM-0 51.84 Mbps STS-3/STM-1 155.52 Mbps STS-12/STM-4 622.08 Mbps
1	19.44 MHz	

The product (or products) mentioned in this data sheet are no longer being manufactured and may not be ordered (OBS)

FIGURE 3. REFERENCE CLOCK DESIGN OPTIONS

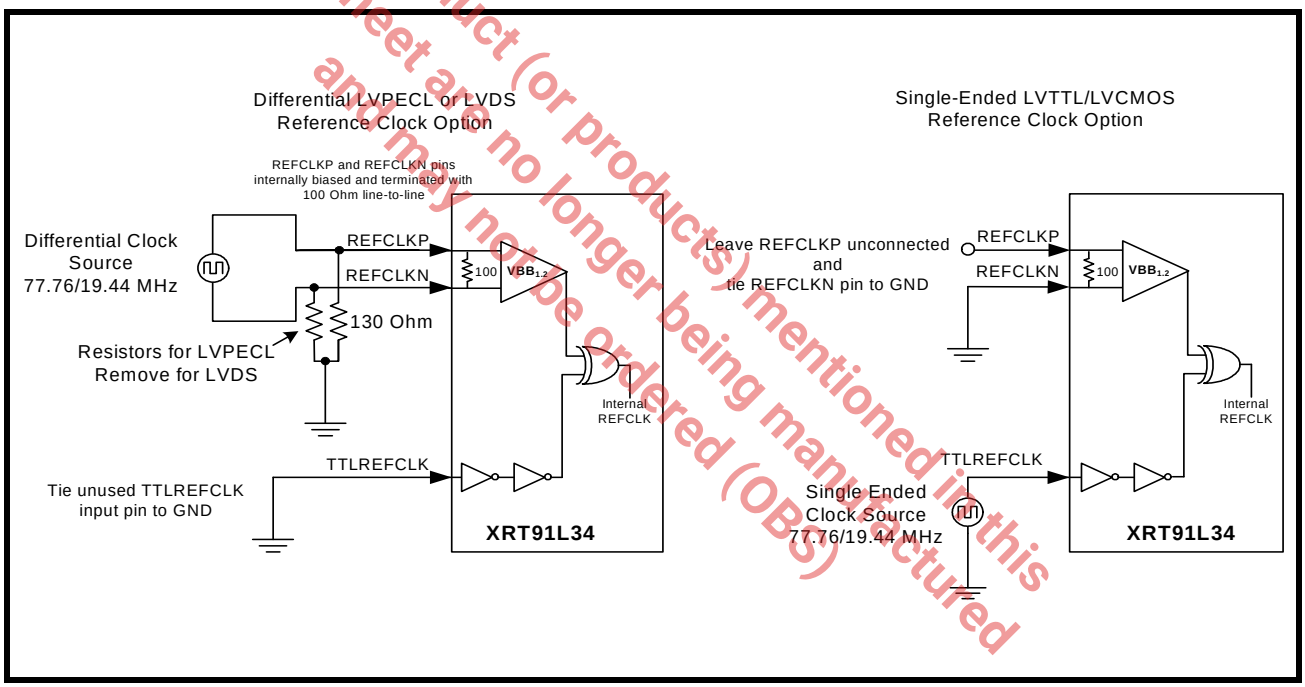

2.0 RECEIVE SECTION

The receive section of XRT91L34 includes four differential input buffers RXDI[3:0]P/N, followed by clock and data recovery units (CDR) and recovered serial data and clock differential output drivers. The receiver accepts the high speed Non-Return to Zero (NRZ) serial data at 622.08/155.52/51.84 Mbps through the input interfaces RXDI[3:0]P/N. The clock and data recovery unit recovers the high-speed receive clock from the incoming data stream. The recovered serial data is presented to the RXDO[3:0]P/N differential output driver interface. The high-speed recovered clock RXCLKO[3:0]P/N, is used to synchronize the transfer of the RXDO[3:0]P/N data with the receive portion of a framer/mapper device. The recovered data RXDO[3:0]P/N and clock RXCLKO[3:0]P/N differential output driver interfaces are designed for ultimate flexibility by supporting either LVDS or Differential LVPECL protocol level. Upon initialization or loss of signal or loss of lock, the external reference clock signal of 19.44 MHz or 77.76 MHz is used to start-up the clock recovery phase-locked loop for proper operation. The included CDR blocks in the XRT91L34 can be individually disabled by asserting the CDRDIS[3:0] pins to permit the flexibility of powering down unused channels.

2.1 Receive Serial Input

The receive serial inputs are applied to RXDI[3:0]P/N. The XRT91L34 includes internal termination, this has the advantage of reducing the number of external board components. The XRT91L34 terminates the receive inputs using 100Ω line-to-line method of termination. Differential LVPECL operation of receive inputs can be supported, provided each optical module Differential LVPECL output pin must have a 130Ω DC current path resistor to GND whether internally or externally. A simplified LVDS/Differential LVPECL DC coupling block diagram is shown in Figure 4.

The product (or product) mentioned in this data sheet are no longer being manufactured and may not be ordered (OBS)

FIGURE 4. RECEIVE SERIAL INPUT INTERFACE USING LVDS/DIFF LVPECL DC COUPLING INTERNAL TERM

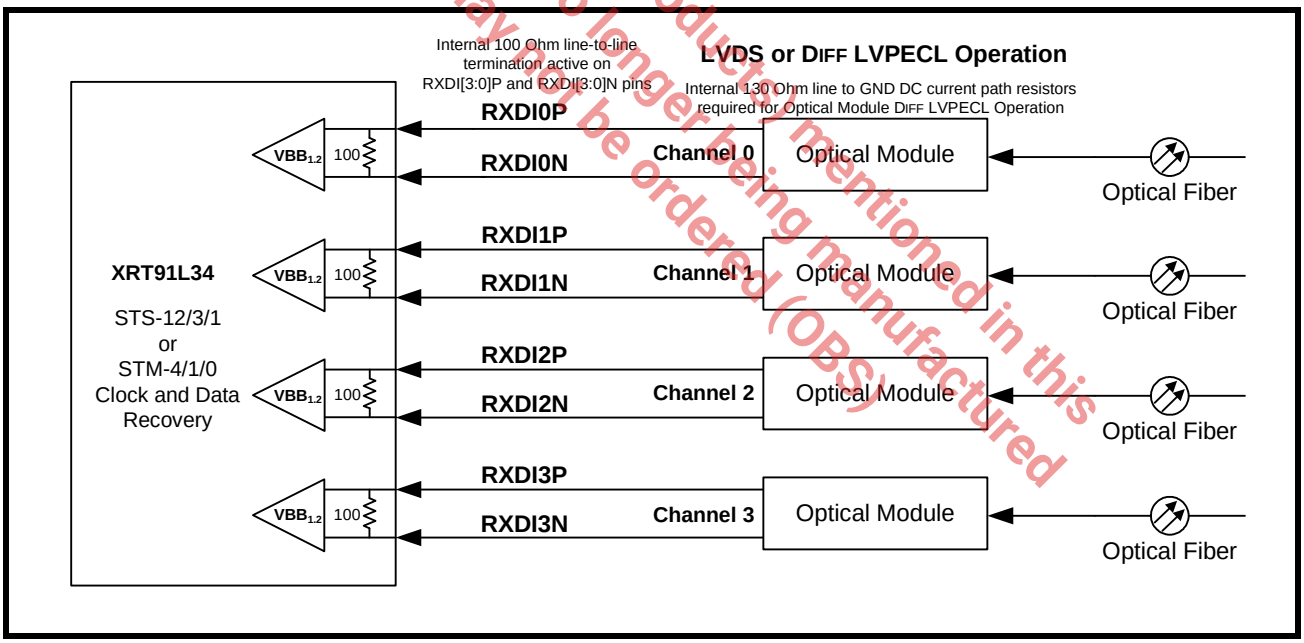

NOTE: *Some optical modules integrate AC coupling capacitors and DC current path resistors internally within the module. AC or DC coupling is largely specific to system design and optical module of choice.*

The receive serial inputs can also be AC coupled to an optical module or an electrical interface. A simplified Differential LVPECL AC coupling using external passive components block diagram is shown in **Figure 5**.

FIGURE 5. RECEIVE SERIAL INPUT INTERFACE USING DIFF LVPECL AC COUPLING INTERNAL TERMINATION

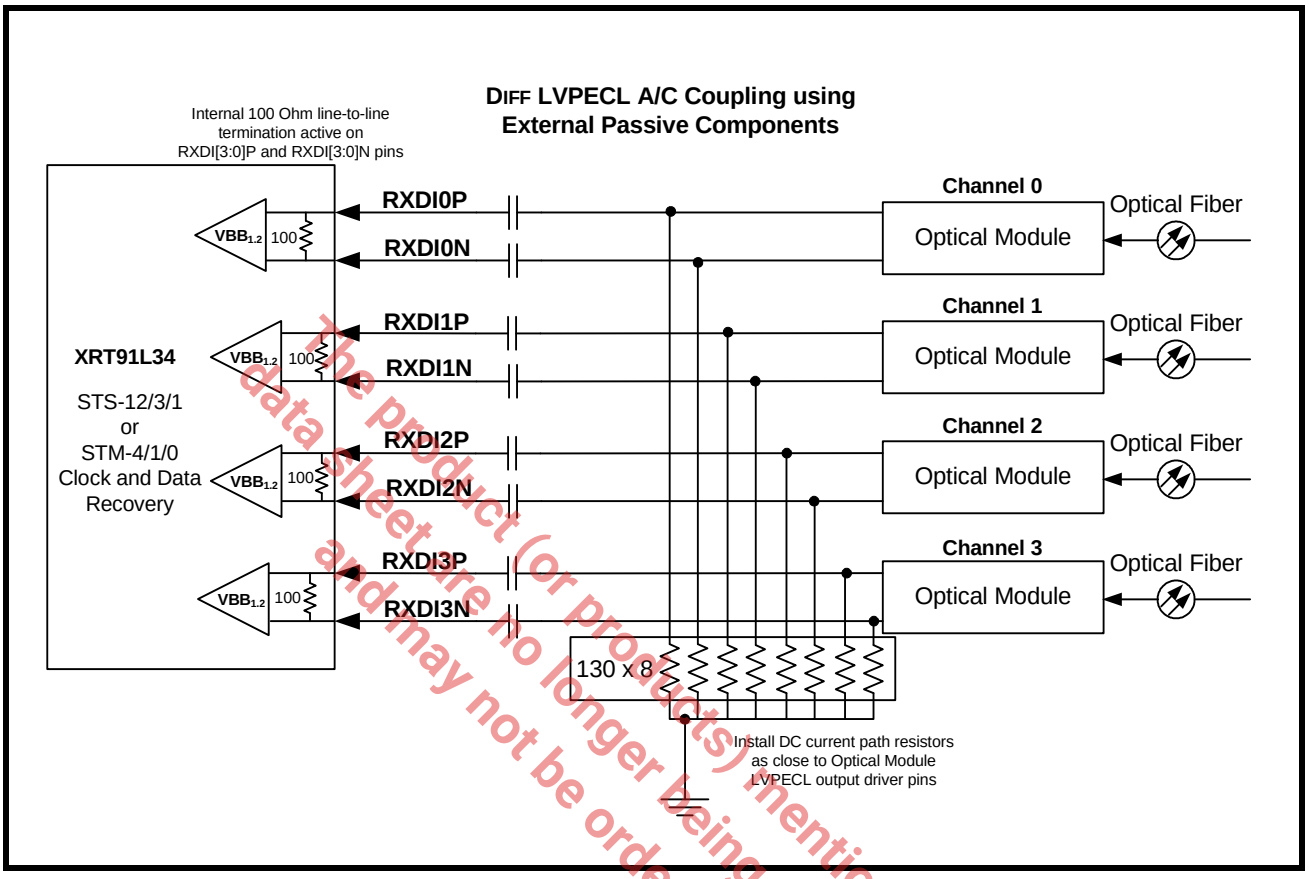

NOTE: *Some optical modules integrate AC coupling capacitors and DC current path resistors internally within the module.*

The product (or products) mentioned in this data sheet are no longer being manufactured and may not be ordered (OBS)

2.2 Receive Clock and Data Recovery

The clock and data recovery (CDR) unit accepts the high speed NRZ serial data from the Differential receiver and generates a clock that is the same frequency as the incoming data. The clock recovery block utilizes the reference clock from REFCLKP/N or TTLREFCLK to train and monitor its clock recovery PLL. Upon startup, the PLL locks to the local reference clock. Once this is achieved, the PLL then attempts to lock onto the incoming receive serial data stream. Whenever the recovered clock frequency deviates from the local reference clock frequency by more than approximately ±500 ppm, the clock recovery PLL will switch to the local reference clock, declare a Loss of Lock and output a high level signal on the LOL output pin. Whenever a Loss of Lock (LOL) or a Loss of Signal (LOS) event occurs, the CDR will continue to supply a receive clock (based on the local reference). When the SDEXT becomes active and internal DLOS is cleared and the recovered clock is determined to be within ±500 ppm accuracy with respect to the local reference source, the clock recovery PLL will switch back to the incoming receive serial data stream. **Table 3** specifies the Clock and Data Recovery Unit performance characteristics.

TABLE 3: CLOCK AND DATA RECOVERY UNIT PERFORMANCE

NAME	PARAMETER	MIN	TYP	MAX	UNITS
REF_{DUTY}	Reference clock duty cycle	40		60	%
REF_{TOL}	Reference clock frequency tolerance[2]	-100		+100	ppm
TOL_{JIT}	Input jitter tolerance with 1 MHz < f < 20 MHz PRBS pattern	0.3	0.4		UI
$OCLK_{DUTY}$	Clock output duty cycle	45		55	%

Jitter specification is defined using a 12kHz to 0.4/1.3/5MHz LP-HP single-pole filter.

[1]These reference clock jitter limits are required for the outputs to meet SONET system level jitter requirements (<10 mUI_{rms}).

[2]Required to meet SONET output frequency stability requirements.

The product (or products) mentioned in this data sheet are no longer being manufactured and may not be ordered (OBS).

2.2.1 Internal Clock and Data Recovery Disable

Optionally, each of the four internal CDR unit can be disabled and powered down when the channel is not in use. Asserting the CDRDISn pin (where n = channel 0, 1, 2, or 3) "High" in Hardware Mode or setting CDRDISn bit (where n = channel 0, 1, 2, or 3) in Host Mode, disables the internal Clock and Data Recovery unit for that particular channel.

2.3 External Receive Loop Filter Capacitors

For STS12/STM4 and STS3/STM1 operation, use 0.47µF (or greater) non-polarized external loop filter capacitors to achieve the required receiver jitter performance for each of the channels. For STS1/STM0 operation, use a minimum of 1.0µF non-polarized capacitors. If all 3 data rates STS12/STS3/STS1 are required in an application, then use 1uF loop filter capacitors. They must be well isolated to prohibit noise entering the CDR block and should be placed as close to the pins as possible. **Figure 6** shows the pin connections and external loop filter components. These four non-polarized capacitors should be of +/- 10% tolerance. Use type X7R or X5R capacitors for improved stability over temperature.

FIGURE 6. EXTERNAL LOOP FILTERS

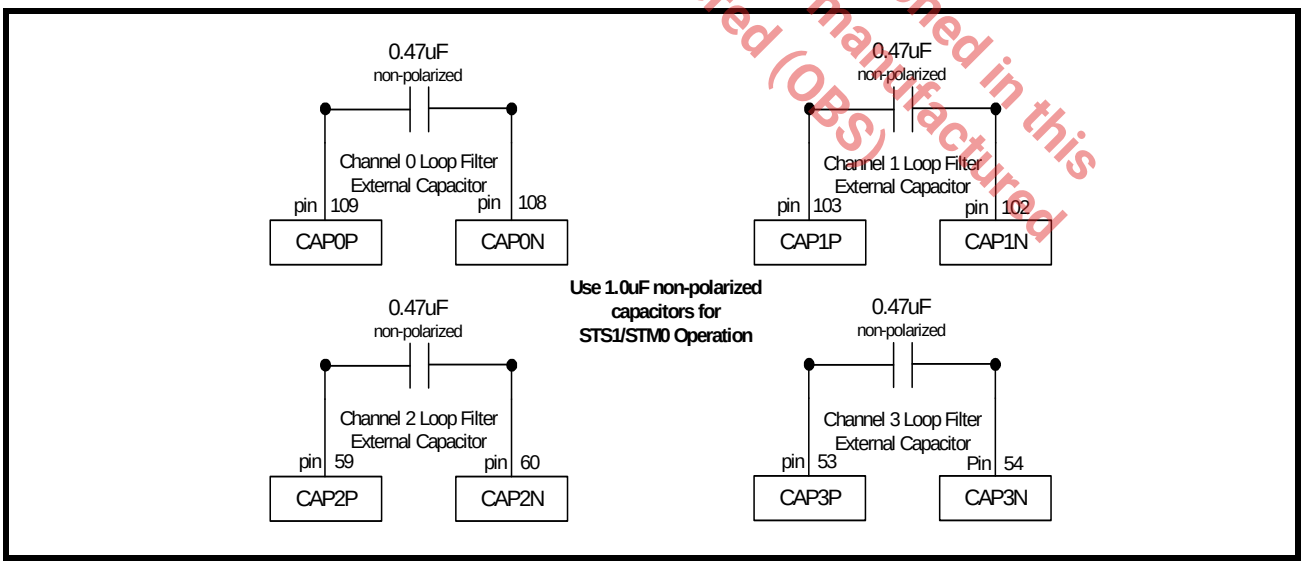

2.4 Internal Digital Loss of Signal and External Signal Detection

XRT91L34 has an integrated Digital Loss of Signal (DLOS) circuit and supports external Signal Detection (SDEXT) for detecting and determining received signal integrity. The internal DLOS circuit monitors the incoming data stream. If the incoming data stream has no transition for more than 2.5µs, Loss of Signal is declared. This LOS condition will be cleared when the circuit detects transitions in a 128µs interval sliding window. Pulling the DLOSDIS pin signal to a high level in hardware mode or setting DLOSDIS bit in host mode will disable the internal DLOS detection circuit to permit the framer/mapper interface to determine the Loss of Signal declaration and clearance criteria for specific applications. The external Signal Detect function is supported by the SDEXT input. An LVCMOS/LVTTL signal comes from the optical module through an output usually called “SD” or “FLAG” which indicates the lack or presence of optical power. Depending on the manufacturer of these devices, the polarity of this signal can be either active "Low" or active "High." The SDEXT and POL inputs are Exclusive OR’ed to determine external Loss of Signal (LOS) condition. In the event that internal DLOS is detected or an external SDEXT input indicates signal absence, the recovered serial data output will be forced to a logic state "0," and the LOS status register is set whenever the host mode serial microprocessor interface is active. This acts as a receive data mute upon LOS function to prevent data chattering and to prevent random noise from being misinterpreted as valid incoming data. **Figure 7** shows the Loss of Signal Detection logic circuit. **Table 4** specifies LOS declaration polarity settings.

The product (or products) mentioned in this data sheet are no longer being manufactured and may not be ordered (OBS)

FIGURE 7. LOSS OF SIGNAL DECLARATION CIRCUIT

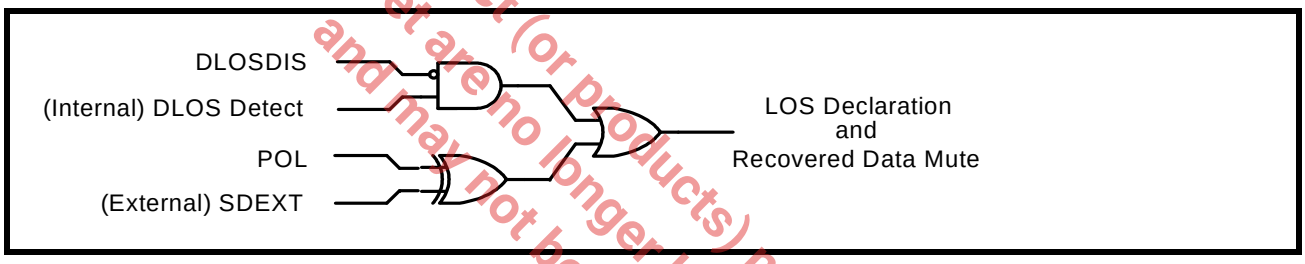

TABLE 4: EXTERNAL LOS DECLARATION POLARITY SETTING

SDEXT	POL	INTERNAL SIGNAL DETECT	LOS BIT STATE (HOST MODE ONLY)	RXDO[3:0]P/N
0	**0**	Active Low. Optical signal presence indicated by SDEXT logic 0 input from optical module.	Low	Normal Operation
0	**1**	Active High. Optical signal presence indicated by SDEXT logic 1 input from optical module.	High **LOS declared**	Muted
1	**0**	Active Low. Optical signal presence indicated by SDEXT logic 0 input from optical module.	High **LOS declared**	Muted
1	**1**	Active High. Optical signal presence indicated by SDEXT logic 1 input from optical module.	Low	Normal Operation

2.5 Multichannel Recovered Output Interface

The recovered data RXDO[3:0]P/N differential output drivers along with the recovered clock RXCLKO[3:0]P/N differential output drivers can be configured for LVDS or Differential LVPECL standard operation. In addition, Host Mode operation permits each of the channelized recovered clock output to be independently disabled such as in repeater applications to save power.

FIGURE 8. MULTICHANNEL RECOVERED OUTPUT INTERFACE BLOCK

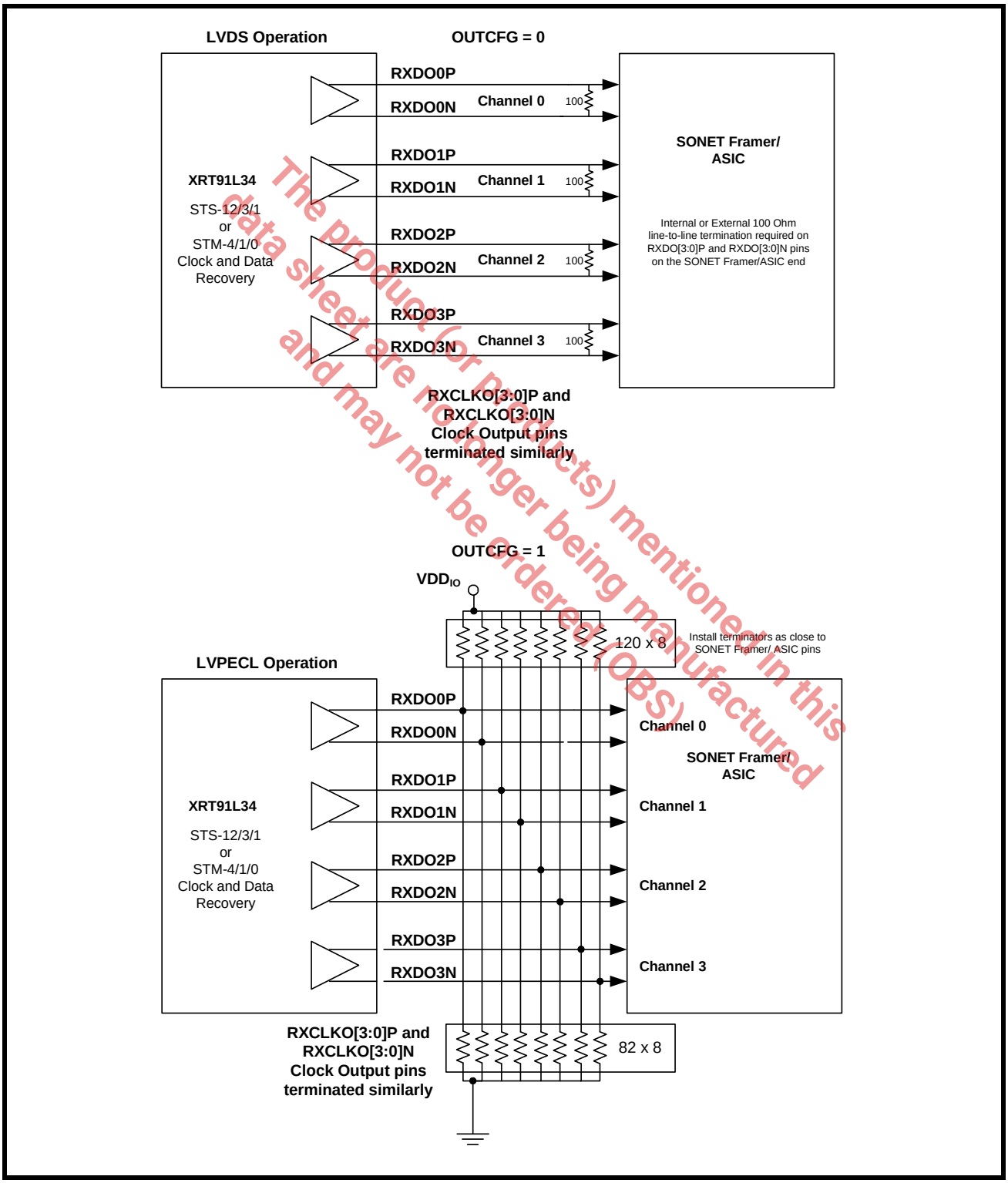

The product (or Products) mentioned in this data sheet are no longer being manufactured and may not be ordered (OBS)

2.6 Differential Recovered Data Output Timing

The differential recovered data and clock outputs operating at the STS-12/STM-4 or STS-3/STM-1 or STS-1/STM-0 datarates will adhere to the data valid output timing shown in Figure 9 ,Table 5, Table 6, and Table 7.

FIGURE 9. DIFFERENTIAL RECOVERED OUTPUT TIMING

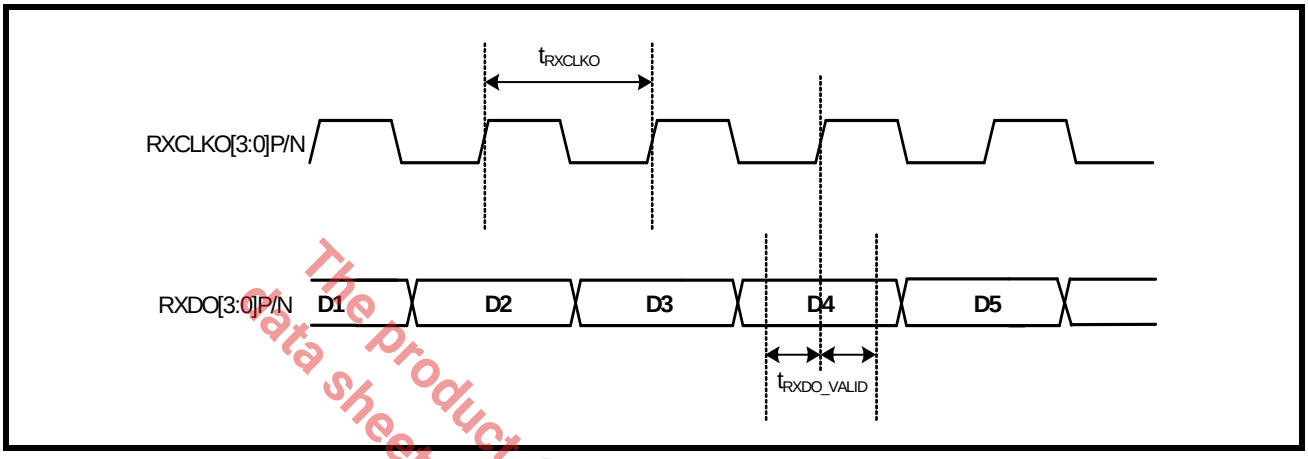

The product (or products) mentioned in this data sheet are no longer being manufactured and may not be ordered (OBS)

TABLE 5: RECOVERED DATA OUTPUT TIMING (STS-12/STM-4 OPERATION)

SYMBOL	PARAMETER	MIN	TYP	MAX	UNITS
t_{RXCLKO}	Recovered high-speed output clock period		1.608		ns
t_{RXDO_VALID}	Time the data is valid on RXDO[3:0]P/N before and after the rising edge of RXCLKO[3:0]P/N	0.5			ns

TABLE 6: RECOVERED DATA OUTPUT TIMING (STS-3/STM-1 OPERATION)

SYMBOL	PARAMETER	MIN	TYP	MAX	UNITS
t_{RXCLKO}	Recovered high-speed output clock period		6.43		ns
t_{RXDO_VALID}	Time the data is valid on RXDO[3:0]P/N before and after the rising edge of RXCLKO[3:0]P/N	2.8			ns

TABLE 7: RECOVERED DATA OUTPUT TIMING (STS-1/STM-0 OPERATION)

SYMBOL	PARAMETER	MIN	TYP	MAX	UNITS
t_{RXCLKO}	Recovered high-speed output clock period		19.29		ns
t_{RXDO_VALID}	Time the data is valid on RXDO[3:0]P/N before and after the rising edge of RXCLKO[3:0]P/N	8.3			ns

3.0 JITTER PERFORMANCE

3.1 SONET Jitter Requirements

SONET receive equipment jitter requirements are specified jitter tolerance and jitter transfer. The definitions of each of these types of jitter are given below.

3.1.1 Rx Jitter Tolerance:

OC-1/STM-0, OC-3/STM-1, and OC-12/STM-4 category II SONET interfaces should tolerate, the input jitter applied according to the mask of **Figure 10**, with the corresponding parameters specified in the figure.

FIGURE 10. GR-253/G.783 JITTER TOLERANCE MASK

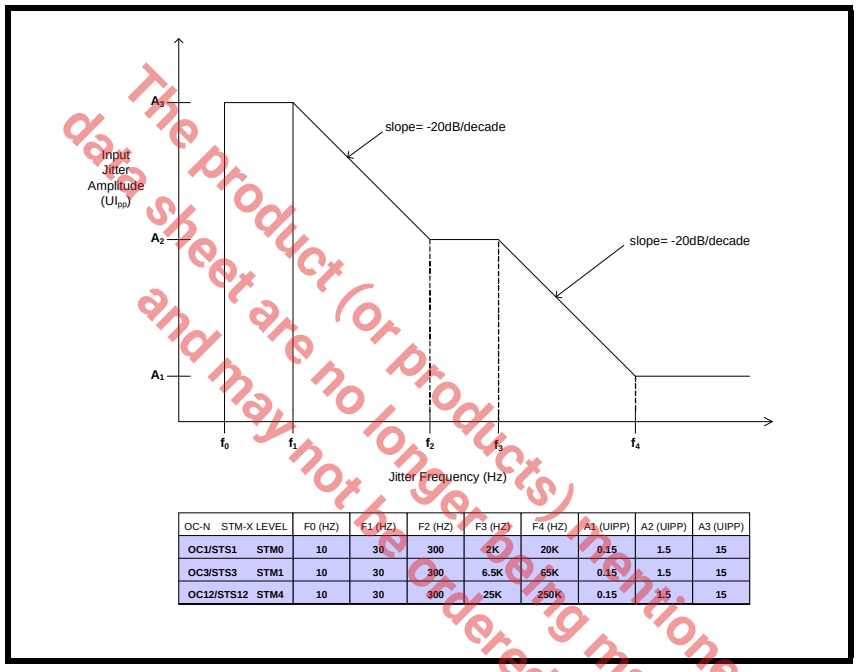

OC-N STM-X LEVEL	F0 (HZ)	F1 (HZ)	F2 (HZ)	F3 (HZ)	F4 (HZ)	A1 (UIPP)	A2 (UIPP)	A3 (UIPP)
OC1/STS1 STM0	10	30	300	2K	20K	0.15	1.5	15
OC3/STS3 STM1	10	30	300	6.5K	65K	0.15	1.5	15
OC12/STS12 STM4	10	30	300	25K	250K	0.15	1.5	15

The product (or products) mentioned in this data sheet are no longer being manufactured and may not be ordered (OBS)

FIGURE 11. XRT91L34 MEASURED JITTER TOLERANCE AT 51.84 MBPS STS-1/STM-0

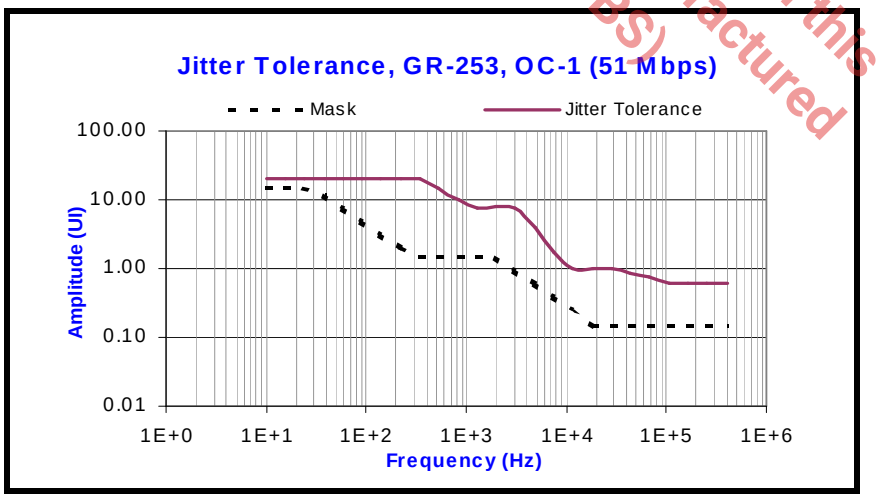

FIGURE 12. XRT91L34 MEASURED JITTER TOLERANCE AT 155.52 MBPS STS-3/STM-1

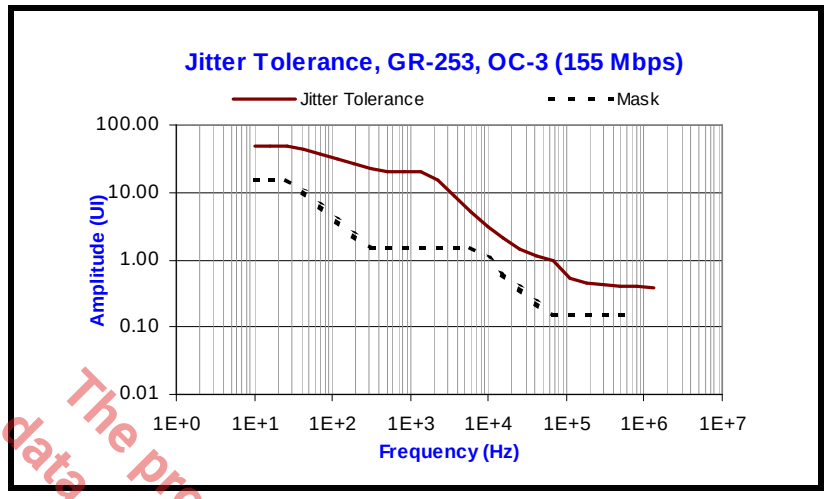

FIGURE 13. XRT91L34 MEASURED JITTER TOLERANCE AT 622.08 MBPS STS-12/STM-4

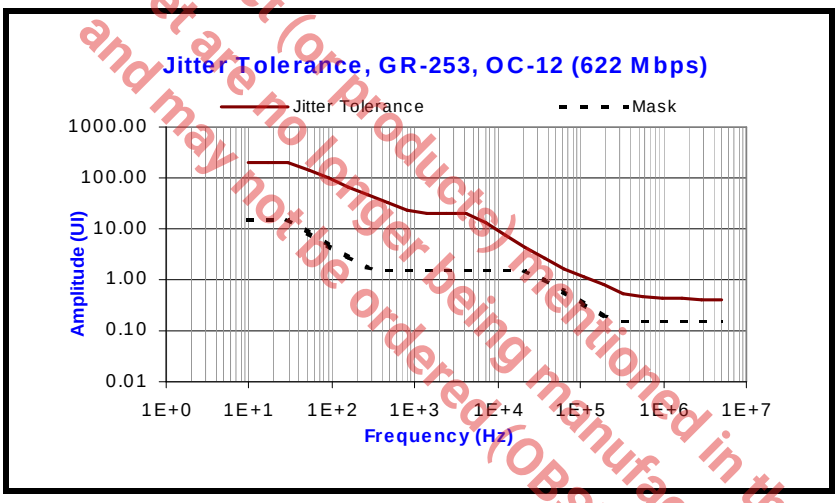

The product (or product) mentioned in this data sheet are no longer being manufactured and may not be ordered (OBS)

3.1.2 Rx Jitter Transfer

Jitter Transfer function is defined as the ratio of jitter on the output relative to the jitter applied on the input versus frequency. It displays the ability of the component unit to attenuate jitter at the specified injected jitter frequencies. There are two distinct characteristics in jitter transfer, jitter gain (jitter peaking) defined as the highest ratio above 0dB and jitter transfer bandwidth. The overall jitter transfer bandwidth is controlled by a low bandwidth loop.

The XRT91L34 meets the latest jitter transfer characteristics as shown in the Figure 14, Figure 15, and Figure 16. The XRT91L34 complies with STS-12/3/1 and STM-4/1/0 jitter transfer masks set forth by Bellcore GR-253 Core section 5.6.2.1 and ITUT G.783 section 15.1.3 as defined in G.825.

FIGURE 14. XRT91L34 MEASURED JITTER TRANSFER AT 51.84 MBPS STS-1/STM-0

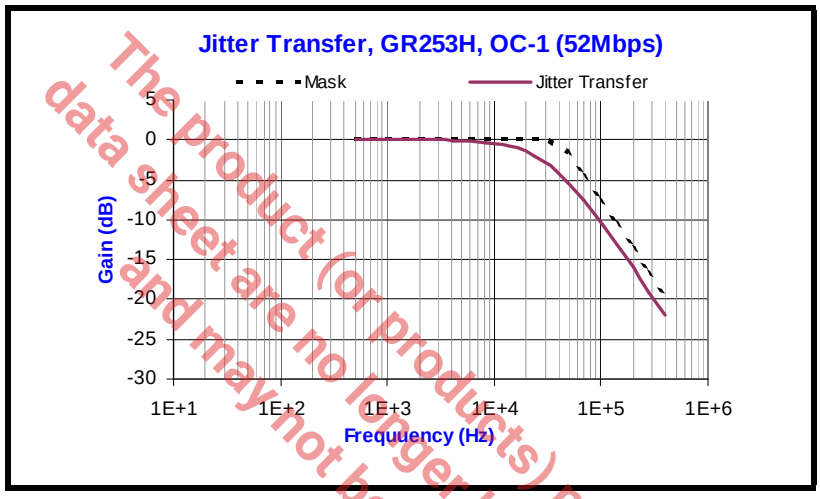

FIGURE 15. XRT91L34 MEASURED JITTER TRANSFER AT 155.52 MBPS STS-3/STM-1

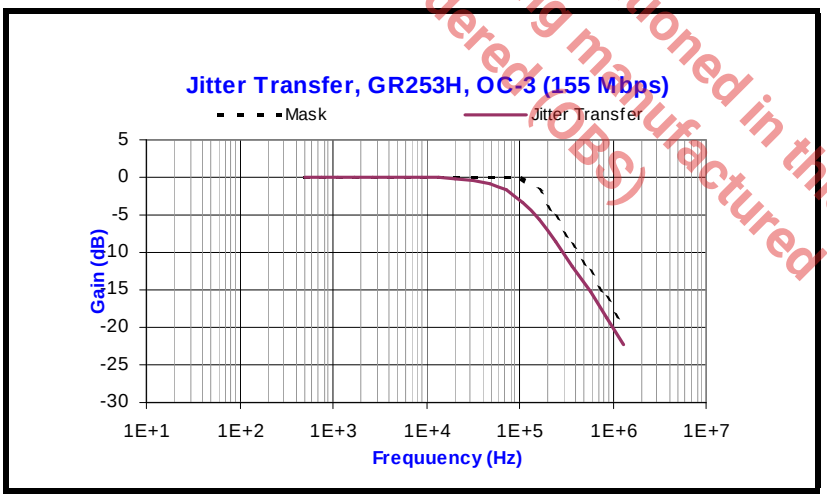

The product (or products) mentioned in this data sheet are no longer being manufactured and may not be ordered (OBS)

FIGURE 16. XRT91L34 MEASURED JITTER TRANSFER AT 622.08 MBPS STS-12/STM-4

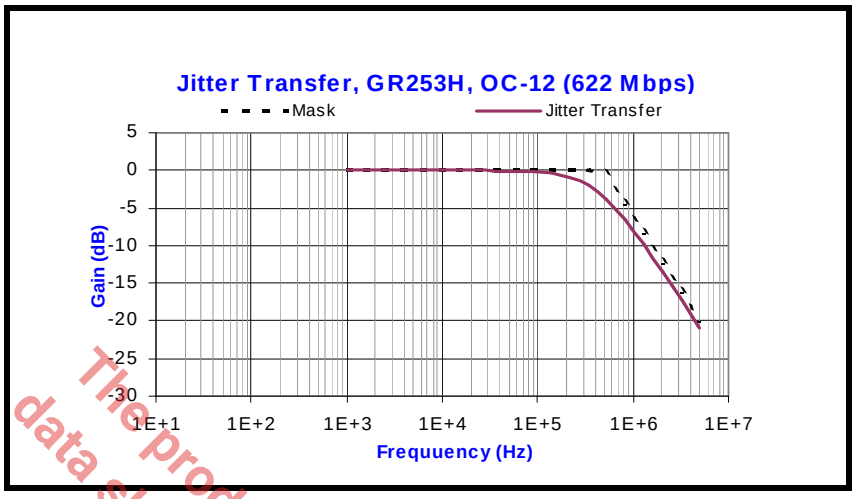

The product (or products) mentioned in this data sheet are no longer being manufactured and may not be ordered (OBS)

4.0 SERIAL MICROPROCESSOR INTERFACE BLOCK

The Serial Microprocessor Interface uses a standard 3-pin serial port with $\overline{CS}$, SCLK, and SDI for programming the device. Optional pins such as SDO, $\overline{INT}$, and $\overline{RESET}$ allow the ability to read back contents of the registers, monitor the device via an interrupt pin, and reset the device to its default configuration by pulling reset "Low" for more than 10ns. A simplified block diagram of the Serial Microprocessor Interface is shown in Figure 17.

FIGURE 17. SIMPLIFIED BLOCK DIAGRAM OF THE SERIAL MICROPROCESSOR INTERFACE

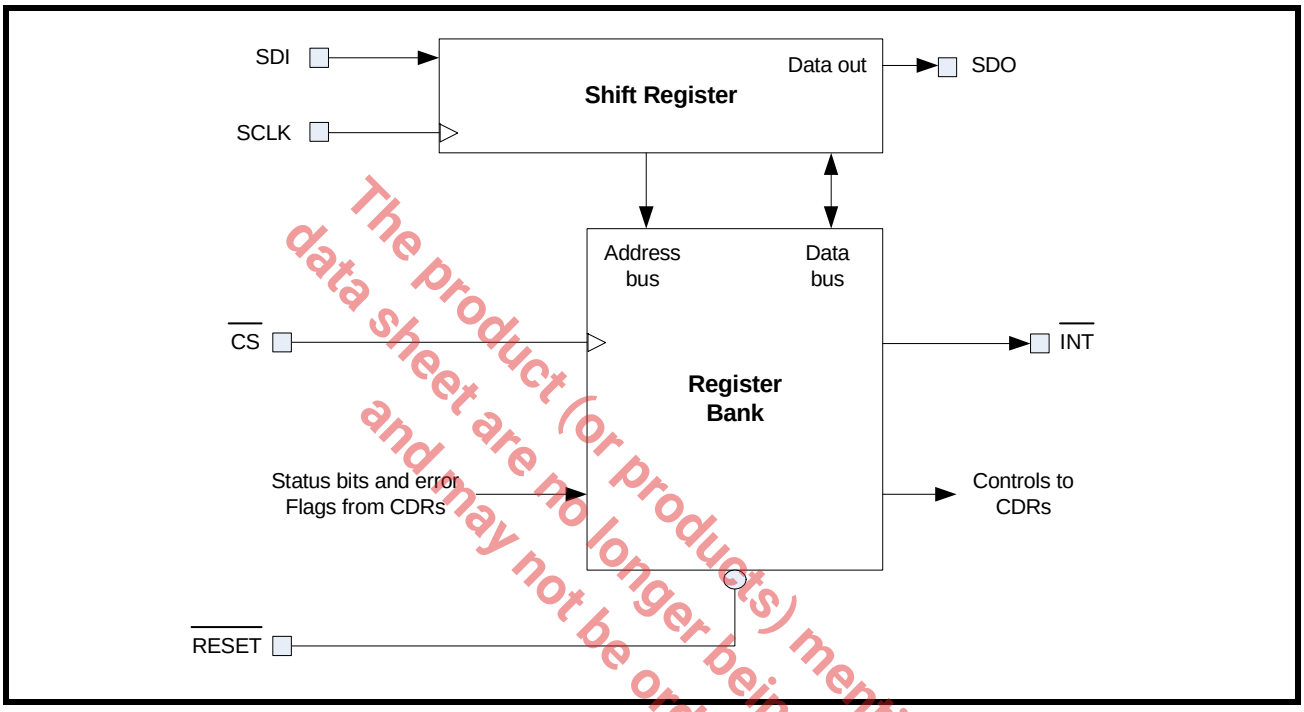

The product (or products) mentioned in this data sheet are no longer being manufactured and may not be ordered (OBS)

4.1 SERIAL TIMING INFORMATION

The serial port requires 16 bits of data applied to the SDI (Serial Data Input) pin. The Serial Microprocessor Interface samples SDI on the rising edge of SCLK (Serial Clock Input). The data is not latched into the device until all 16 bits of serial data have been sampled. A timing diagram of the Serial Microprocessor Interface is shown in Figure 18.

FIGURE 18. TIMING DIAGRAM FOR THE SERIAL MICROPROCESSOR INTERFACE

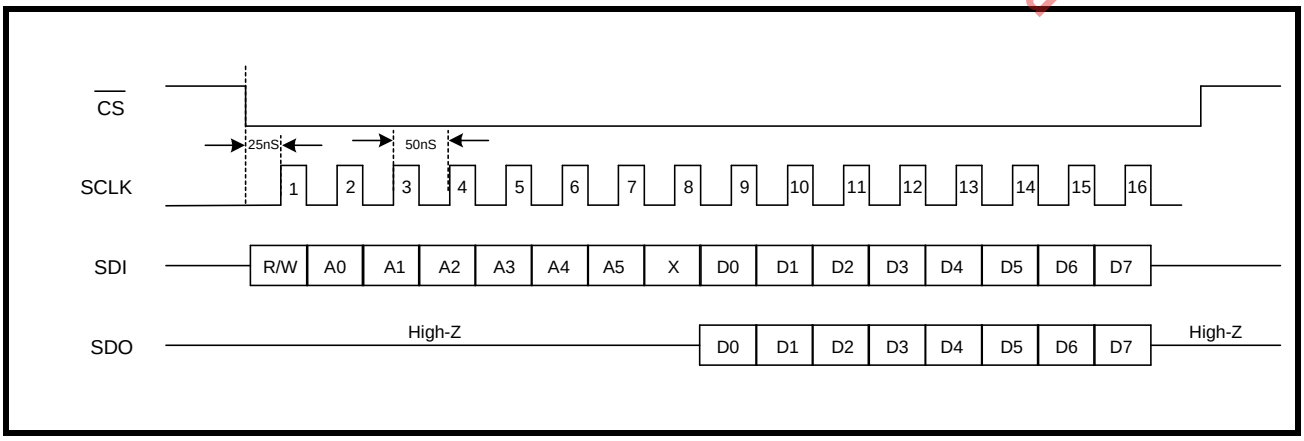

NOTE: *The serial microprocessor interface does **NOT** support "burst write" or "burst read" operations. Chip Select (active "Low") **must be de-asserted** at the end of each write or read operation.*

4.2 16-BIT SERIAL DATA INPUT DESCRITPTION

The serial data input is sampled on the rising edge of SCLK. For read operations, the SDO signal is updated on the falling edge of SCLK. The serial data must be applied to the serial port LSB first. The 16 bits of serial data are described below.

4.2.1 R/W (SCLK1)

The first serial bit applied to the device SDI pin determines whether a Read or Write operation is desired. If the R/W bit is set to "0", the serial port is configured for a Write operation. If the R/W bit is set to "1", the serial port is configured for a Read operation.

4.2.2 A[5:0] (SCLK2 - SCLK7)

The next 6 SCLK cycles are used to provide the address to which a Read or Write operation will occur. A0 (LSB) must be sent to the SDI pin first followed by A1 and so forth until all 6 address bits have been sampled by SCLK.

4.2.3 X (Dummy Bit SCLK8)

The dummy bit sampled by SCLK8 is used to allow sufficient time for the serial data output pin to update data if the readback mode is selected by setting R/W = "1". Therefore, the state of this bit is ignored and can hold either "0" or "1" during both Read and Write operations.

4.2.4 D[7:0] (SCLK9 - SCLK16)

The next 8 SCLK cycles are used to provide the data to be written into the internal register chosen by the address bits. D0 (LSB) must be sent to the SDI pin first followed by D1 and so forth until all 8 data bits have been sampled by SCLK. Once 16 SCLK cycles have been complete, the data is held until $\overline{CS}$ is pulled "High" whereby, the serial port latches the data into the selected internal register.

4.3 8-BIT SERIAL DATA OUTPUT DESCRIPTION

When R/W is set to "1" (Read operation) the serial data output is updated on the falling edge of SCLK8 - SCLK16, D0 (LSB) is provided at the SDO pin on the falling edge of SCLK8, followed by D1 and so forth until all 8 data bits have been updated after which the SDO output pin returns to a high impedance state until the next read operation.

The product (or products) mentioned in this data sheet are no longer being manufactured and may not be ordered (OBS)

5.0 REGISTER MAP AND BIT DESCRIPTIONS

The XRT91L34 consists of 6 Common Registers including the Device ID and Revision ID registers and 12 channelized registers. Table 8 below presents the overall Register Map.

TABLE 8: MICROPROCESSOR INTERFACE REGISTER MAP

REG	ADDR	TYPE	D7	D6	D5	D4	D3	D2	D1	D0
Control Registers (0x00 - 0x22)										
0	0x00	R/W	Reserved	Reserved	Reserved	DLOSDIS	Reserved	MINT_EN	CDRREFSEL	SWRST
1	0x01	RO	Reserved	Reserved	Reserved	Reserved	INTS3	INTS2	INTS1	INTS0
2	0x02	RO	**Device ID MSB (See Bit Description)**							
3	0x03	RO	**Device ID LSB (See Bit Description)**							
4	0x04	RO	**Revision ID MSB (Register value is 0x00)**							
5	0x05	RO	**Revision ID LSB (See Bit Description)**							
6	0x06	R/W	Reserved	Reserved	Reserved	Reserved	Reserved	Reserved	Reserved	Reserved
7	0x07	R/W	Reserved	Reserved	Reserved	Reserved	Reserved	Reserved	Reserved	Reserved
CHANNEL 0										
8	0x08	R/W	Reserved	Reserved	Reserved	Reserved	Reserved	RCLKDIS0	CDRDIS0	POL0
9	0x09	R/W	Reserved	Reserved	DATA0RATE1	DATA0RATE0	Reserved	Reserved	LOL0_IE	LOS0_IE
10	0x0A	RO RUR	Reserved	Reserved	LOL0	LOS0	Reserved	Reserved	LOL0_IS	LOS0_IS
0x0B - 0x0F		RO	**Reserved**							
CHANNEL 1										
16	0x10	R/W	Reserved	Reserved	Reserved	Reserved	Reserved	RCLKDIS1	CDRDIS1	POL1
17	0x11	R/W	Reserved	Reserved	DATA1RATE1	DATA1RATE0	Reserved	Reserved	LOL1_IE	LOS1_IE
18	0x12	RO RUR	Reserved	Reserved	LOL1	LOS1	Reserved	Reserved	LOL1_IS	LOS1_IS
0x13 - 0x17		RO	**Reserved**							
CHANNEL 2										
24	0x18	R/W	Reserved	Reserved	Reserved	Reserved	Reserved	RCLKDIS2	CDRDIS2	POL2
25	0x19	R/W	Reserved	Reserved	DATA2RATE1	DATA2RATE0	Reserved	Reserved	LOL2_IE	LOS2_IE
26	0x1A	RO RUR	Reserved	Reserved	LOL2	LOS2	Reserved	Reserved	LOL2_IS	LOS2_IS
0x1B - 0x1F		RO	**Reserved**							
CHANNEL 3										
32	0x20	R/W	Reserved	Reserved	Reserved	Reserved	Reserved	RCLKDIS3	CDRDIS3	POL3
33	0x21	R/W	Reserved	Reserved	DATA3RATE1	DATA3RATE0	Reserved	Reserved	LOL3_IE	LOS3_IE
34	0x22	RO RUR	Reserved	Reserved	LOL3	LOS3	Reserved	Reserved	LOL3_IS	LOS3_IS

The product (or products) mentioned in this data sheet are no longer being manufactured and may not be ordered (OBS)

COMMON CONTROL REGISTERS

TABLE 9: MICROPROCESSOR INTERFACE REGISTER 0X00 BIT DESCRIPTION

GLOBAL CONTROL REGISTER (0X00)				
BIT	**NAME**	**FUNCTION**	Register Type	Default Value (HW Reset)
D7	Reserved	This Register Bit is Not Used	RO	0
D6	Reserved	This Register Bit is Not Used	RO	0
D5	Reserved	This Register Bit is Not Used	RO	0
D4	DLOSDIS	**DLOS (Digital Loss of Signal) Disable** This global bit is used to disable the channelized internal DLOS monitoring and automatic muting of RXDO[3:0]P/N recovered data output pins upon DLOS detection. "0" = Monitor & Mute recovered data upon LOS declaration "1" = Disable internal DLOS monitoring	R/W	0
D3	Reserved	This Register Bit is Not Used	RO	0
D2	MINT_EN	**Master Interrupt Enable** "0" = Disables Interrupt generation "1" = Enables Interrupt generation	R/W	0
D1	CDRREFSEL	**Clock and Data Recovery Unit Reference Frequency Select** This bit is used to select the clock input reference. "0" = 77.76 MHz reference frequency support "1" = 19.44 MHz reference frequency support	R/W	0
D0	SWRST	**Software Reset** A "0" to "1" transition will asynchronously reset the device and all register bit settings to their default state. This bit will automatically reset itself to "0". User does not have to write "0" to this bit to resume normal operation. "0" = Normal Operation "1" = Resets all registers to default values	R/W	0

The product (or products) mentioned in this data sheet are no longer being manufactured and may not be ordered (OBS)

TABLE 10: MICROPROCESSOR INTERFACE REGISTER 0X01 BIT DESCRIPTION

CHANNEL INTERRUPT STATUS REGISTER (0X01)				
BIT	NAME	FUNCTION	Regis-ter Type	Default Value (HW Reset)
D7	Reserved	This Register Bit is Not Used	RO	0
D6	Reserved	This Register Bit is Not Used	RO	0
D5	Reserved	This Register Bit is Not Used	RO	0
D4	Reserved	This Register Bit is Not Used	RO	0
D3	INTS3	**Channel 3 Interrupt Status** This bit indicates an interrupt occuring in Channel 3. "0" = No Interrupt Generated "1" = Channel Interrupt Occurring	RO	0
D2	INTS2	**Channel 2 Interrupt Status** This bit indicates an interrupt occuring in Channel 2. "0" = No Interrupt Generated "1" = Channel Interrupt Occurring	RO	0
D1	INTS1	**Channel 1 Interrupt Status** This bit indicates an interrupt occuring in Channel 1. "0" = No Interrupt Generated "1" = Channel Interrupt Occurring	RO	0
D0	INTS0	**Channel 0 Interrupt Status** This bit indicates an interrupt occuring in Channel 0. "0" = No Interrupt Generated "1" = Channel Interrupt Occurring	RO	0

The product (of products) mentioned in this data sheet are no longer being manufactured and may not be ordered (OBS)

TABLE 11: MICROPROCESSOR INTERFACE REGISTER 0X02 BIT DESCRIPTION

DEVICE "ID" REGISTER (0X02)				
BIT	NAME	FUNCTION	Register Type	Default Value (HW reset)
D7 D6 D5 D4 D3 D2 D1 D0	Device "ID" MSB	The device "ID" of the XRT91L34 CDR is 0x8405h. Along with the revision "ID", the device "ID" is used to enable software to identify the silicon adding flexibility for system control and debug.	RO	1 0 0 0 0 1 0 0

TABLE 12: MICROPROCESSOR INTERFACE REGISTER 0X03 BIT DESCRIPTION

DEVICE "ID" REGISTER (0X03)				
BIT	**NAME**	**FUNCTION**	Register Type	Default Value (HW reset)
D7	Device "ID" LSB	The device "ID" of the XRT91L34 CDR is 0x8405h. Along with the revision "ID", the device "ID" is used to enable software to identify the silicon adding flexibility for system control and debug.	RO	0
D6				0
D5				0
D4				0
D3				0
D2				1
D1				0
D0				1

The product(s) mentioned in this data sheet are no longer being manufactured and may not be ordered (OBS)

TABLE 13: MICROPROCESSOR INTERFACE REGISTER 0X04 BIT DESCRIPTION

REVISION "ID" REGISTER (0X04)				
BIT	**NAME**	**FUNCTION**	Register Type	Default Value (HW reset)
D7	Revision "ID" MSB	The revision "ID" of the XRT91L34 CDR is used to enable software to identify which revision of silicon is currently being tested. This MSB revision "ID" register will always contain the value 0x00h.	RO	0
D6				0
D5				0
D4				0
D3				0
D2				0
D1				0
D0				0

TABLE 14: MICROPROCESSOR INTERFACE REGISTER 0X05 BIT DESCRIPTION

REVISION "ID" REGISTER (0X05)				
BIT	**NAME**	**FUNCTION**	Register Type	Default Value (HW reset)
D7	Revision "ID" LSB	The revision "ID" of the XRT91L34 CDR is used to enable software to identify which revision of silicon is currently being tested. The revision "ID" for the first revision of silicon (Revision A) will be 0x01h.	RO	This byte shows the revision of the device.
D6				
D5				
D4				
D3				
D2				
D1				
D0				

TABLE 15: MICROPROCESSOR INTERFACE REGISTER 0X08, 0X10, 0X18, 0X20 BIT DESCRIPTION

CHANNEL CONTROL REGISTER (CH0 = 0X08, CH1 = 0X10, CH2 = 0X18, CH3 = 0X20)				
BIT	**NAME**	**FUNCTION**	Register Type	Default Value (HW reset)
D7	Reserved	This Register Bit is Not Used	RO	0
D6	Reserved	This Register Bit is Not Used	RO	0
D5	Reserved	This Register Bit is Not Used	RO	0
D4	Reserved	This Register Bit is Not Used	RO	0
D3	Reserved	This Register Bit is Not Used	RO	0
D2	RCLKDISn	**Recovered Serial Clock Output Disable** This bit is used to control the activity of the 622.08/155.52/51.84 MHz differential serial clock output. Tristating RXCLKOnP/N output reduces power consumption. "0" = RXCLKOnP/N output Enabled "1" = RXCLKOnP/N output Tristated	R/W	0
D1	CDRDISn	**Clock and Data Recovery Unit Disable** Disables Internal Clock and Data Recovery Unit. "0" = Internal CDR Unit is Enabled "1" = Internal CDR Unit is Disabled	R/W	0
D0	POLn	**Polarity for SDEXT Input** Controls the Signal Detect polarity convention of SDEXT. "0" = SDEXT is active "Low" "1" = SDEXT is active "High"	R/W	0

NOTE: n denotes channel number.

The product (or products) mentioned in this data sheet are no longer being manufactured and may not be ordered (OBS)

TABLE 16: MICROPROCESSOR INTERFACE REGISTER 0X09, 0X11, 0X19, 0X21 BIT DESCRIPTION

<table>
<tr><th colspan="5">CONFIGURATION AND INTERRUPT ENABLE CHANNEL REGISTER (CH0 = 0X09, CH1 = 0X11, CH2 = 0X19, CH3 = 0X21)</th></tr>
<tr><th>BIT</th><th>NAME</th><th>FUNCTION</th><th>Register Type</th><th>Default Value (HW reset)</th></tr>
<tr><td>D7</td><td>Reserved</td><td>This Register Bit is Not Used</td><td>RO</td><td>0</td></tr>
<tr><td>D6</td><td>Reserved</td><td>This Register Bit is Not Used</td><td>RO</td><td>0</td></tr>
<tr><td>D5</td><td>DATAnRATE1</td><td rowspan="2">Data Rate Selection Bit-1 and Bit-0
These bits selects SONET/SDH reception speed rate for each of the four channels independently according to the logic below.
<table><tr><th colspan="2">DATANRATE[1:0]</th><th>DATA RATE</th></tr><tr><td>0</td><td>0</td><td>STS-1/STM-0
51.84 Mbps</td></tr><tr><td>0</td><td>1</td><td>STS-3/STM-1
155.52 Mbps</td></tr><tr><td>1</td><td>0</td><td>STS-12/STM-4
622.08 Mbps</td></tr><tr><td>1</td><td>1</td><td>STS-12/STM-4
622.08 Mbps</td></tr></table></td><td>R/W</td><td>0</td></tr>
<tr><td>D4</td><td>DATAnRATE0</td><td>R/W</td><td>0</td></tr>
<tr><td>D3</td><td>Reserved</td><td>This Register Bit is Not Used</td><td>RO</td><td>0</td></tr>
<tr><td>D2</td><td>Reserved</td><td>This Register Bit is Not Used</td><td>RO</td><td>0</td></tr>
<tr><td>D1</td><td>LOLn_IE</td><td>Loss of Lock Interrupt Enable
"0" = Masks the LOL interrupt generation
"1" = Enables Interrupt generation</td><td>R/W</td><td>0</td></tr>
<tr><td>D0</td><td>LOSn_IE</td><td>Loss of Signal Interrupt Enable
"0" = Masks the LOS interrupt generation
"1" = Enables Interrupt generation</td><td>R/W</td><td>0</td></tr>
</table>

NOTE: n denotes channel number.

The product(or products) mentioned in this data sheet are no longer being manufactured and may not be ordered (OBS)

TABLE 17: MICROPROCESSOR INTERFACE REGISTER 0X0A, 0X12, 0X1A, 0X22 BIT DESCRIPTION

INTERRUPT STATUS CONTROL REGISTER (CH0 = 0X0A, CH1 = 0X12, CH2 = 0X1A, CH3 = 0X22)				
BIT	**NAME**	**FUNCTION**	Register Type	Default Value (HW reset)
D7	Reserved	This Register Bit is Not Used	RO	0
D6	Reserved	This Register Bit is Not Used	RO	0
D5	LOLn	**Loss of Lock Detection** The Loss of Lock Detect is used to indicate whether the CDR PLL is locked. "0" = CDR Locked "1" = CDR Out of Lock	RO	0
D4	LOSn	**Loss of Signal** The LOS indicates the Loss of Signal activity. "0" = No Alarm "1" = A LOS condition is present	RO	0
D3	Reserved	This Register Bit is Not Used	RO	0
D2	Reserved	This Register Bit is Not Used	RO	0
D1	LOLn_IS	**Loss of Lock Interrupt Status** An external interrupt will not occur unless the LOLn_IE interrupt enable bit is set in the appropriate registers 0x09, 0x11, 0x19, and 0x21 for channels 0, 1, 2, and 3 respectively. "0" = No Change "1" = Change in CDR Lock Status Occurred	RUR	0
D0	LOSn_IS	**Loss of Signal Interrupt Status** An external interrupt will not occur unless the LOSn_IE interrupt enable bit is set in the appropriate registers 0x09, 0x11, 0x19, and 0x21 for channels 0, 1, 2, and 3 respectively. "0" = No Change "1" = Change in LOS Status Occurred	RUR	0

NOTE: *n denotes channel number.*

The product (or products) mentioned in this data sheet are no longer being manufactured and may not be ordered (OBS)

6.0 ELECTRICAL CHARACTERISTICS

ABSOLUTE MAXIMUM RATINGS

Air Thermal Resistance of LQFP Package.....Θ_{jA} = 25°C/W	Operating Temperature Range.....-40°C t o 85°C
Case Thermal Resistance of LQFP Package.Θ_{jC} = 4°C/W	Case Temperature under bias.....-55°C to 125°C
ESD Protection (HBM).....>2000V	Storage Temperature .....-65°C to 150°C

TABLE 18: ABSOLUTE MAXIMUM POWER AND INPUT/OUTPUT RATINGS

SYMBOL	TYPE	PARAMETER	MIN.	TYP.	MAX.	UNITS
$VDD_{1.8}$		1.8V Core Power Supplies	-0.5		3.6	V
VDD_{IO}		3.3V Input/Output Power Supplies	-0.5		5.5	V
	LVDS	DC logic signal input voltage	-0.5		VDD_{IO} +0.5	V
	LVPECL	DC logic signal input voltage	-0.5		VDD_{IO} +0.5	V
	LVTTL/ LVCMOS	DC logic signal input voltage	-0.5		VDD_{IO} +0.5	V
	LVDS	DC logic signal output voltage	-0.5		VDD_{IO} +0.5	V
	LVPECL	DC logic signal output voltage	-0.5		VDD_{IO} +0.5	V
	LVCMOS	DC logic signal output voltage	-0.5		VDD_{IO} +0.5	V
	LVDS	Input current	-200		200	mA
	LVPECL	Input current	-200		200	mA
	LVTTL/ LVCMOS	Input current	-200		200	mA

The product (or products) mentioned in this data sheet are no longer being manufactured and may not be ordered (OPs)

NOTE: *Stresses listed under Absolute Maximum Power and I/O ratings may be applied to devices one at a time without causing permanent damage. Functionality at or above the values listed is not implied. Exposure to these values for extended periods will severely affect device reliability.*

TABLE 19: POWER AND CURRENT DC ELECTRICAL CHARACTERISTICS

Test Conditions: $VDD_{1.8}$ = 1.8V ± 5%, VDD_{IO} = 3.3V ± 5% unless otherwise specified							
SYMBOL	**TYPE**	**PARAMETER**	**MIN.**	**TYP.**	**MAX.**	**UNITS**	**CONDITIONS**
$VDD_{1.8}$		Core Power Supply Voltage	1.710	1.8	1.890	V	
VDD_{IO}		I/O Power Supply Voltage	3.135	3.3	3.465	V	
$I_{DD1.8\text{-}OC1}$		1.8V 51.84Mbps Total Power Supply Current				mA	LVDS Mode
$I_{DD1.8\text{-}OC3}$		1.8V 155.52Mbps Total Power Supply Current				mA	LVDS Mode
$I_{DD1.8\text{-}OC12}$		1.8V 622.08Mbps Total Power Supply Current		117		mA	LVDS Mode
$I_{DD3.3\text{-}OC1}$		3.3V 51.84Mbps Total Power Supply Current				mA	LVDS Mode
$I_{DD3.3\text{-}OC3}$		3.3V 155.52Mbps Total Power Supply Current				mA	LVDS Mode

TABLE 19: POWER AND CURRENT DC ELECTRICAL CHARACTERISTICS

Test Conditions: $VDD_{1.8}$ = 1.8V ± 5%, VDD_{IO} = 3.3V ± 5% unless otherwise specified							
SYMBOL	TYPE	PARAMETER	MIN.	TYP.	MAX.	UNITS	CONDITIONS
$I_{DD3.3-OC12}$		3.3V 622.08Mbps Total Power Supply Current		50		mA	LVDS Mode
$I_{DD3.3-OC12}$		3.3V 622.08Mbps Total Power Supply Current		30		mA	LVDS Mode RXCLKO disabled
P_{DD-OC1}		Total Power Consumption				mW	LVDS Mode
P_{DD-OC3}		Total Power Consumption				mW	LVDS Mode
$P_{DD-OC12}$		Total Power Consumption		376		mW	LVDS Mode
$P_{DD-OC12}$		Total Power Consumption		310		mW	LVDS Mode RXCLKO disabled
$I_{DD1.8-OC1}$		1.8V 51.84Mbps Total Power Supply Current				mA	LVPECL Mode
$I_{DD1.8-OC3}$		1.8V 155.52Mbps Total Power Supply Current				mA	LVPECL Mode
$I_{DD1.8-OC12}$		1.8V 622.08Mbps Total Power Supply Current		117		mA	LVPECL Mode
$I_{DD3.3-OC1}$		3.3V 51.84Mbps Total Power Supply Current				mA	LVPECL Mode
$I_{DD3.3-OC3}$		3.3V 155.52Mbps Total Power Supply Current				mA	LVPECL Mode
$I_{DD3.3-OC12}$		3.3V 622.08Mbps Total Power Supply Current		386		mA	LVPECL Mode
$I_{DD3.3-OC12}$		3.3V 622.08Mbps Total Power Supply Current		198		mA	LVPECL Mode RXCLKO disabled
P_{DD-OC1}		Total Power Consumption				mW	LVPECL Mode
P_{DD-OC3}		Total Power Consumption				mW	LVPECL Mode
$P_{DD-OC12}$		Total Power Consumption		1485		mW	LVPECL Mode
$P_{DD-OC12}$		Total Power Consumption		865		mW	LVPECL Mode RXCLKO disabled

The product (or products) mentioned in this data sheet are no longer being manufactured and may not be ordered (OBS).

TABLE 20: LVDS/DIFFERENTIAL LVPECL INPUT LOGIC SIGNAL DC ELECTRICAL CHARACTERISTICS

Test Condition: $VDD_{1.8}$ = 1.8V ± 5%, VDD_{IO} = 3.3V ± 5% unless otherwise specified							
SYMBOL	TYPE	PARAMETER	MIN	TYP	MAX	UNITS	CONDITIONS
V_{IH}	LVDS/LVPECL	Input High Voltage			VDD_{IO} + 100	mV	
V_{IL}	LVDS/LVPECL	Input Low Voltage	VDD_{IO} - 100			mV	
V_{IDIFF}	LVDS/LVPECL	Input Differential Voltage $\lvert V_{IH} - V_{IL} \rvert$	100		2400	mV	
V_{ICOMM}	LVDS/LVPECL	Input Common Mode Voltage	0	1200	VDD_{IO}	mV	

FIGURE 19. LVDS/DIFFERENTIAL LVPECL VOLTAGE PARAMETER CONVENTION

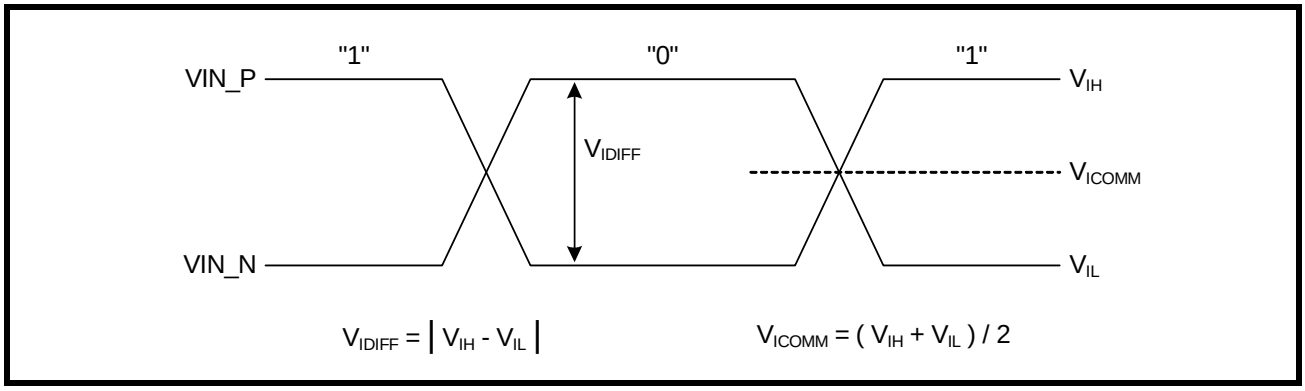

The product (or products) mentioned in this data sheet are no longer being manufactured and may not be ordered (OBS)

TABLE 21: LVDS OUTPUT LOGIC SIGNAL DC ELECTRICAL CHARACTERISTICS

Test Condition: $VDD_{1.8}$ = 1.8V ± 5%, VDD_{IO} = 3.3V ± 5% unless otherwise specified							
SYMBOL	TYPE	PARAMETER	MIN	TYP	MAX	UNITS	CONDITIONS
V_{OH}	LVDS	Output High Voltage	1100	1250	1500	mV	100 Ω line - line
V_{OL}	LVDS	Output Low Voltage	700	900	1200	mV	100 Ω line - line
V_{ODIFF}	LVDS	Output Differential Voltage $\lvert V_{OH} - V_{OL} \rvert$	250		450	mV	100 Ω line - line
V_{OCOMM}	LVDS	Output Common Mode Voltage	850	1050	1350	mV	100 Ω line - line

TABLE 22: DIFFERENTIAL LVPECL OUTPUT LOGIC SIGNAL DC ELECTRICAL CHARACTERISTICS

Test Conditions: $VDD_{1.8}$ = 1.8V ± 5%, VDD_{IO} = 3.3V ± 5% unless otherwise specified							
SYMBOL	TYPE	PARAMETER	MIN	TYP	MAX	UNITS	CONDITIONS
V_{OH}	LVPECL	Output High Voltage		VDD_{IO} - 900		mV	
V_{OL}	LVPECL	Output Low Voltage		VDD_{IO} - 1800		mV	
V_{ODIFF}	LVPECL	Output Differential Voltage $\lvert V_{OH} - V_{OL} \rvert$	600		1100	mV	Terminate with 50Ω to VDD_IO-2.0
V_{OCOMM}	LVPECL	Output Common Mode Voltage		VDD_{IO} - 1350		V	

The Product (or products) mentioned in this data sheet are no longer being manufactured and may not be ordered (OBS)

TABLE 23: LVTTL/LVCMOS SIGNAL DC ELECTRICAL CHARACTERISTICS

Test Condition: $VDD_{1.8}$ = 1.8V ± 5%, VDD_{IO} = 3.3V ± 5% unless otherwise specified							
SYMBOL	TYPE	PARAMETER	MIN	TYP	MAX	UNITS	CONDITIONS
V_{OH}	LVCMOS	Output High Voltage	2.4		VDD_{IO}	V	I_{OH} = -8.0mA
V_{OL}	LVCMOS	Output Low Voltage	0		0.4	V	I_{OH} = 8.0mA
V_{IH}	LVTTL/ LVCMOS	Input High Voltage	2.0		VDD_{IO}	V	
V_{IL}	LVTTL/ LVCMOS	Input Low Voltage	0		0.8	V	
I_{LEAK}	LVTTL/ LVCMOS	Input Leakage Current	-10		10	µA	V_{IN} = VDD_{IO} or V_{IN} = 0
I_{LEAK_PU}	LVTTL/ LVCMOS	Input Leakage Current with Pull-Up Resistor	-100		10	µA	V_{IN} = 0
I_{LEAK_PD}	LVTTL/ LVCMOS	Input Leakage Current with Pull-Down Resistor	-10		100	µA	V_{IN} = VDD_{IO}

NOTE: *All input control pins are LVCMOS and LVTTL compatible. All output control pins are LVCMOS compatible only.*

TABLE 24: ORDERING INFORMATION

PART NUMBER	PACKAGE	OPERATING TEMPERATURE RANGE
XRT91L34IV	128-pin Plastic Quad Flat Pack (14.0 x 14.0 x 1.4 mm, LQFP)	-40°C to +85°C
XRT91L34IV-F	128-pin Pb-Free Quad Flat Pack (14.0 x 14.0 x 1.4 mm, LQFP)	-40°C to +85°C

PACKAGE DIMENSIONS

128-PIN Low Profile QUAD FLAT PACK (14 x 14 x 1.4 mm, LQFP)

Rev. 1.00

The product (or products) mentioned in this data sheet are no longer being manufactured and may not be ordered (OBS)

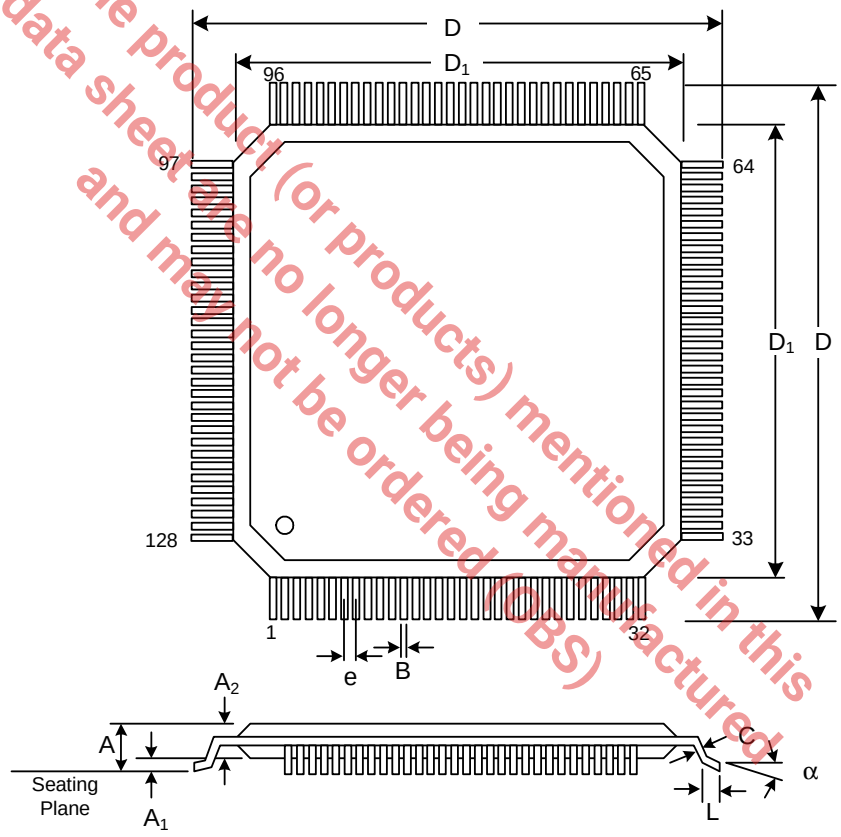

SYMBOL	INCHES		MILLIMETERS	
	MIN	MAX	MIN	MAX
A	0.055	0.063	1.40	1.60
A1	0.002	0.006	0.05	0.15
A2	0.053	0.057	1.35	1.45
B	0.005	0.009	0.13	0.23
C	0.004	0.008	0.09	0.20
D	0.622	0.638	15.80	16.20
D1	0.547	0.555	13.90	14.10
e	0.0157BSC		0.40BSC	
L	0.018	0.030	0.45	0.75
α	0°	7°	0°	7°

Note: The control dimension is in millimeter.

TABLE 25: REVISION HISTORY

REVISION #	DATE	DESCRIPTION
1.0.0	September 2007	New Release
1.0.1	October 2007	Fixed V_{OH}, V_{OL} and V_{OCOMM} specs in **Figure 21** as per design input and product engineering characterization.

The product (or products) mentioned in this data sheet are no longer being manufactured and may not be ordered (OBS)